MITSUBISHI
HEAVY INDUSTRIES, LTD.

Our Technologies, Your Tomorrow

R410A

High Performance Air-Conditioning

2016

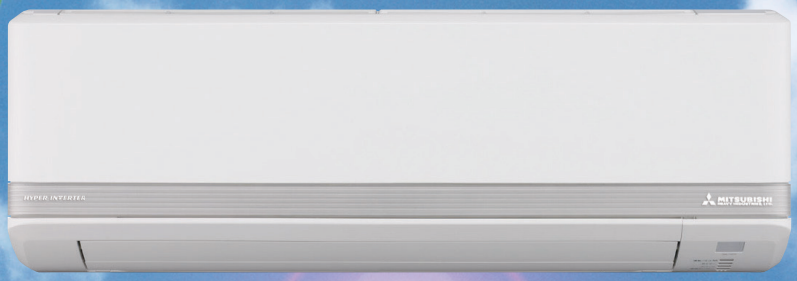

50Hz

16R02E

SR series

Residential Air Conditioners

Diamond Series

SRK ZMX

Wall Mounted type

Remote control

The industry's highest levels

SEER 7.60

(SRK25ZMX-S in the cooling mode)

3D AUTO
Programmed air distribution

Sophisticated design

Quiet operation

MITSUBISHI HEAVY INDUSTRIES, LTD.

Industry leading energy efficiency and high reliability from our advanced technology.

High Efficiency

Consideration for the Environment

Several radical design changes and engineering developments have brought about a vast improvement in energy efficiency and environmental protection.

ENERGY LABEL

SEER and SCOP is defined in European regulations listed below.

No.626/2011 of 4 May 2011: energy labeling of air-conditioners (below cooling capacity 12kW).
No.206/2012 of 6 March 2012: requirement for air-conditioners and comfort fans.

Seasonal efficiency is the new way of rating the true efficiency of heating and cooling products over an entire year.

Set by the EU's new regulation implementing Eco-Design Directive for Energy Related Product (ErP) which specifies the minimum efficiency of air-conditioners manufacturers must integrate into their products.

The new Seasonal Efficiency rating system that must be used for heating and cooling by all manufacturers are;

SEER - Seasonal Efficiency Ratio (value in cooling)
SCOP - Seasonal Coefficient of Performance (value in heating)

The new rating system will indicate the true efficiency of the energy using product at specified condition.

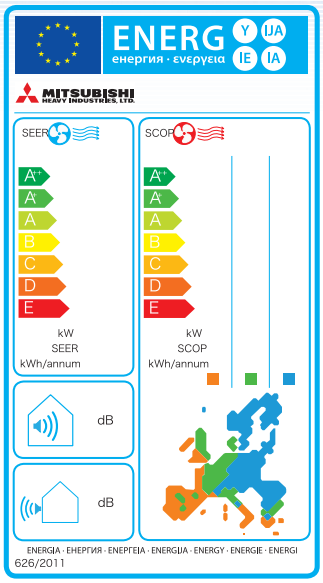

Employment of lead-free solder

Adapted to RoHS directive

RoHS:Restriction of Hazardous substances

In order to avoid the release of hazardous substances into the environments, all models have utilized lead-free solder application. It has been considered to be difficult to use lead-free solder for practical applications because it requires higher solder temperatures at assembly, which can jeopardize reliability. However our PbF soldering method can produce a higher quality lead-free printed circuit board.

Employment of R410A

All models use refrigerant R410A characterized by the ozone depletion coefficient being 0.

Excellent Energy Saving

High performance and excellent energy savings are achieved at the same time by heat exchanger's increased capacity and employment of high efficiency DC motor.

Applied models
All inverter models

QUICK & HIGH EFFICIENCY Control

DC PAM inverter

An inverter driven system has a number of performance advantages over a constant speed system. For example, its variable compressor outputs can ensure quick heating after a startup and attain a set temperature more quickly.
Then, the air conditioner can slow down its compressor speed to save energy, keeping comfortable conditions. Moreover, the compressor is DC driven, so it provides higher performance.

DC Pulse Amplitude Modulation PAM INVERTER

DC compressor motor

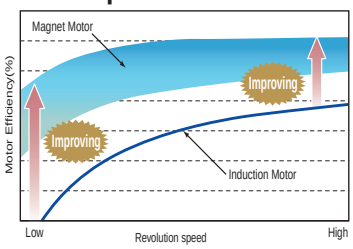

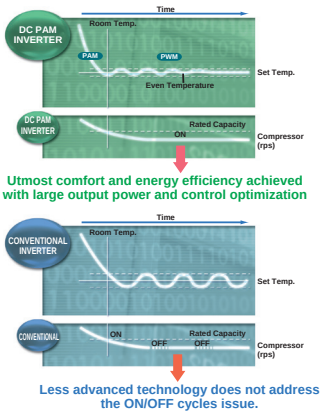

Applied models
All inverter models

New Inverter Control (Vector control)

The new inverter control, with the advanced vector control technology, functions at high efficiency.

- Smooth operation from low speed to high speed
- Smooth Sine Voltage Wave form are attained
- Energy efficiency is further improved in low speed range

Our latest technologies

Applied models
All inverter models

Propeller fan

Matching a propeller fan with a fan motor has been optimized in order to keep the same capacity as that of previous models with less electrical consumption. Synergy effect with leaf grill has increased efficiency by 5% and quietened the sound. (SRC40/50/60ZMX)

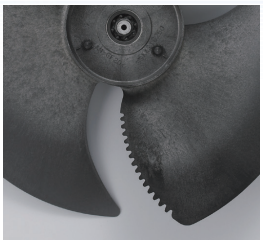

Serration fan

Coated PCB

The printed wiring board of the outdoor unit is coated. It lasts long having a tolerance for humidity.

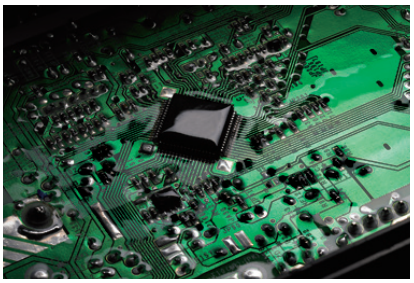

Energy saving leaf shape grill

The radial shape grill has been developed in order to send airflow efficiently out unit along the grill. Decreasing the load for motor and propeller fan leads to greater energy efficiency and contributes to quieter sound. (SRC40/50/60ZMX)

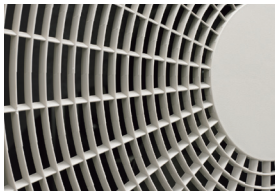

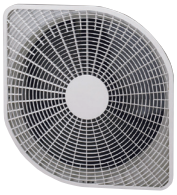

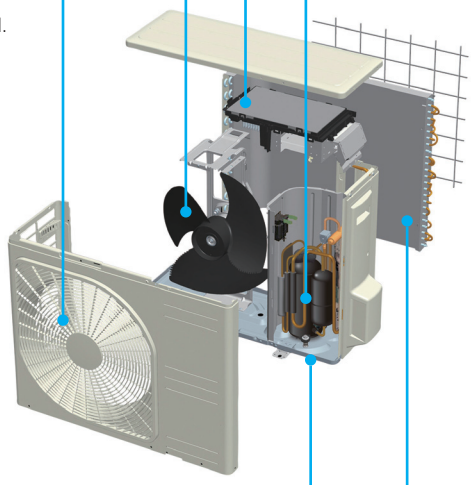

High efficiency DC twin rotary compressor

The newly developed DC twin rotary compressor performs highly efficient operation under the wide range conditions from low speed to high speed. Besides low vibration, low sound level and high efficiency can be also achieved by the optimization of mechanical parts dimension and by the application of high power Neodymium motor. (SRC40/50/60ZMX, SCM series)

Superior corrosion resistance hot dipping steel sheet

Superior corrosion resistance hot dipping steel sheet is applied at the base of outdoor units.
It has superior corrosion resistance and scratch resistance properties compared to conventional materials.
(except SRC25/35ZMP)

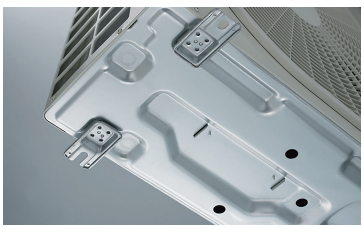

Indoor unit

Our optimal combination of fin configuration and copper tube has maximized airflow volume without expanding indoor unit's size in width.The heat exchanger efficiency rate has been drastically improved by 33% compared with that of previous models. New fin can maximize airflow volume and save energy simultaneously. (except SRK-ZMP)

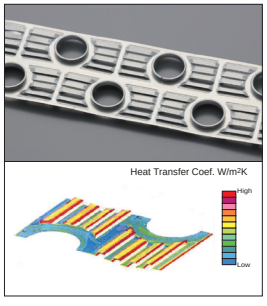

Outdoor unit

Thanks to changing fin configuration from flat sheet to new M shape fin, efficiency has increased by 10%. This high dimensional structure provides optimum balance of heat transfer and airflow.

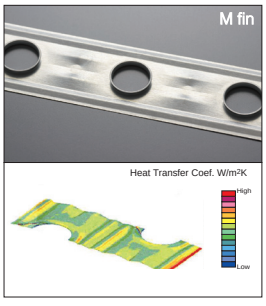

3D AUTO Vertical + Horizontal AIR SCROLL

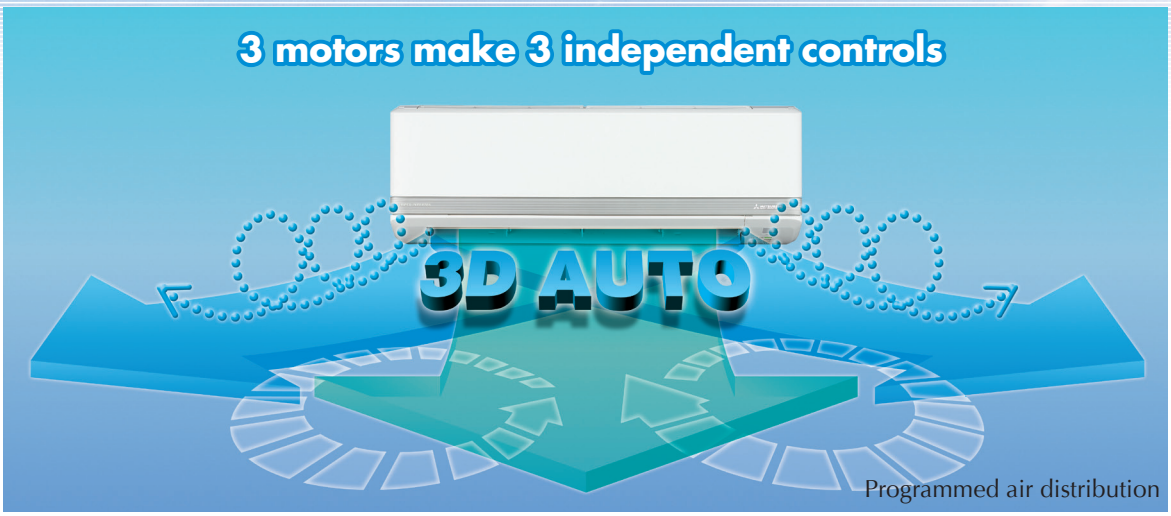

Applied models
SRK-ZMX, SRK-ZR,
SRK-ZM,
SRK63/71HE
(Manual Setting only)

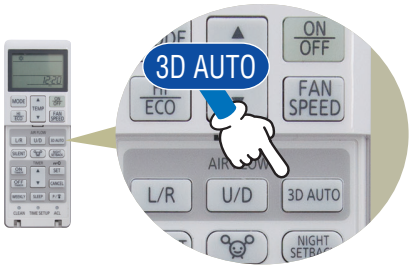

3D AUTO is one touch programmed and three motors (one vertical working motor + two horizontal working motors) make three independent air flow controls.
The uniform and quiet airflow can be delivered to every corner of the room, achieving economical operation and minimizing energy loss.

Programmed 3D AUTO

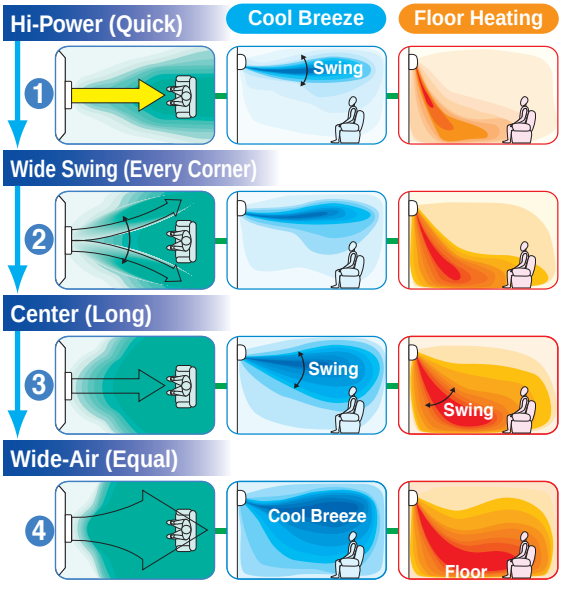

Thanks to automatic control of air flow volume and air flow direction, comfortable air conditioning of the entire room can be done effectively.
The cooled air flows directly to the ceiling in cooling operation mode, not directly at the occupants of the room. Comfort cooled air flow comes via the ceiling like a cool breeze.
In the heating mode, warm air flow can be sent down to the floor directly. The warm air then spread along the floor achieving optimum comfort.

Manual Setting

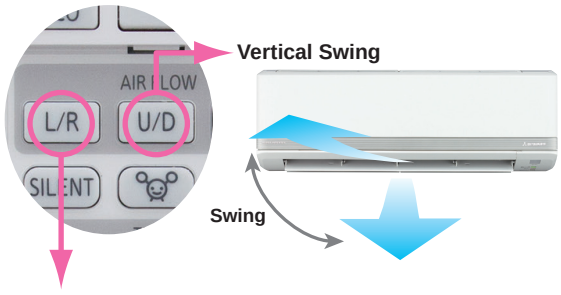

Horizontal swings in 8 directions

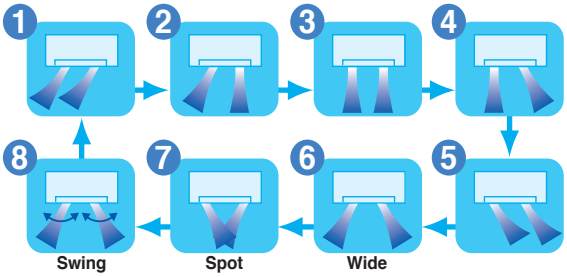

The airflow direction from the right and left louvers can be controlled individually. Eight different air flow patterns can be selected.

Aircraft technology was used in the design of the air conditioner's airflow system

Jet Air Scroll Long Reach & Silent Air Flow

Applied models
All SRK

We used the same aerodynamic analysis technology as used in developing jet engines.

CFD (computational fluid dynamics), used in blade shape design of jet engines, has been applied to the design of air channels in air conditioners to develop the ideal air channel system (air circulation). The jet air stream generated by this air channel system can bring large volume air without consuming much power. While at the same time, it delivers a uniform gentle breeze to every corner of the room.

(C)Mitsubishi Aircraft Corporation

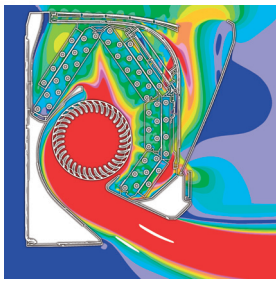

Fast ⟷ Slow
Colors in the figure show the air speed.

Long Reach Air Flow

Powerful airflow is realized by Jet technology.
Good for large living rooms and shops. Increase your comfort.

Applied models
SRK50/60ZMX, SRK-ZR, SRK-ZM, SRK63/71HE

Installation Positioning

The air flow direction can be set to suit your room's configuration.

Applied models
SRK-ZMX, SRK-ZR, SRK-ZM

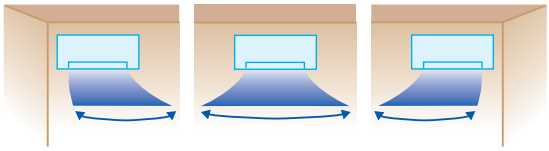

Movable Air Inlet Panel

Applying a movable air inlet panel, minimization of air resistance and advanced design are realized.

Applied models
SRK-ZMX

Clean Air

Applied models
SRK-ZMX, SRK-ZM,
SRK-HG, SRK-HE

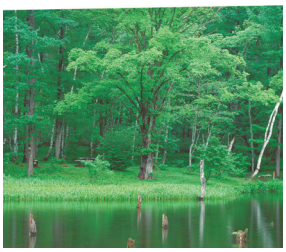

Generates the same amount of negative ions as a forest environment

24-hour ION

The air conditioner main body employs a tourmaline-coated sheet. The sheet generates negative ions around the clock. Even when the air conditioner is not running, it generates as many negative ions (2,500– 3,000/cc) as in a forest, stream or fall does, allowing you to experience them without incurring any electrical charges.

Applied models
SRK-ZMX, SRK-ZR
SRK-ZM, SRK-ZMP,
SRK-HG, SRF-ZMX,
SRR-ZM

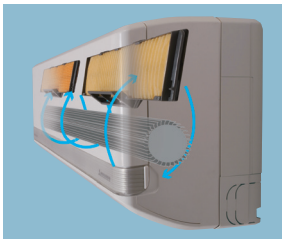

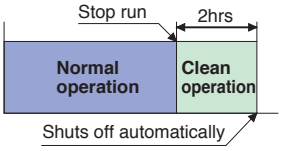

Always keeping the indoor unit clean

Self Clean Operation

"Self clean operation" is operated for 2 hours after the unit has stopped its normal operation.
The indoor unit is dried up and the growth of mold is restrained. Users can select whether this mode is utilized or not.

Situation of mold after one week

When you don't execute "Self Clean Operation"
↓
Fungal mycelia expand.

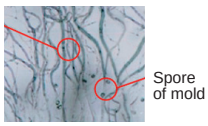

When you execute "Self Clean Operation"
↓
The spore of mold doesn't germinate.

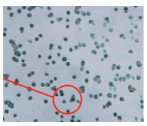

Applied models
SRK-ZMX,
SRK-ZR,
SRK-ZM

Push ALLERGEN Mode

The air in your room is kept fresh

Allergen Clear System

"Allergen clear system" is equipped to suppress the influence of the allergen caught by the filter by controlling the temperature and humidity.

In case of Multi-split system, Allergen Clear System is not available.
If [Allergen] button is pushed by mistake, the indoor unit will stop.

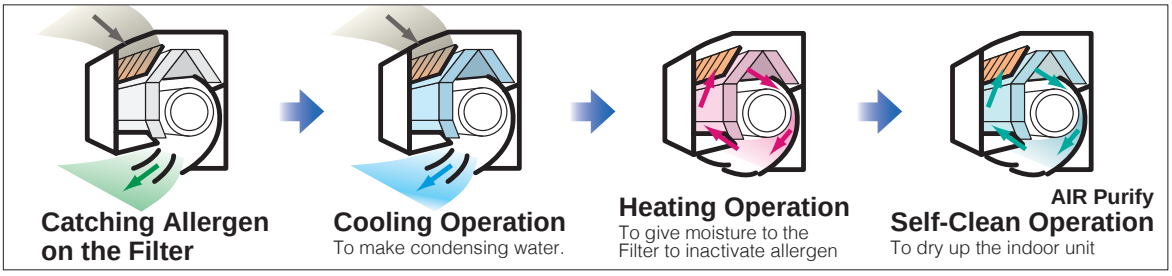

This is the original and only technology to control the temperature and humidity for inactivating allergens

Allergen Clear Filter

Enzyme + Urea deactivates allergens and kills bacteria.

The allergen clear filter breaks down the pollen, lice, and allergens that live on cat skins, etc. and deactivates them. The secret of deactivation is the Enzyme-urea compound. It deactivates not only allergens but also all kinds of bacteria, molds and viruses. Even if allergens and bacteria, etc. fly off of the filter, they are deactivated, so the air in your room is kept fresh.

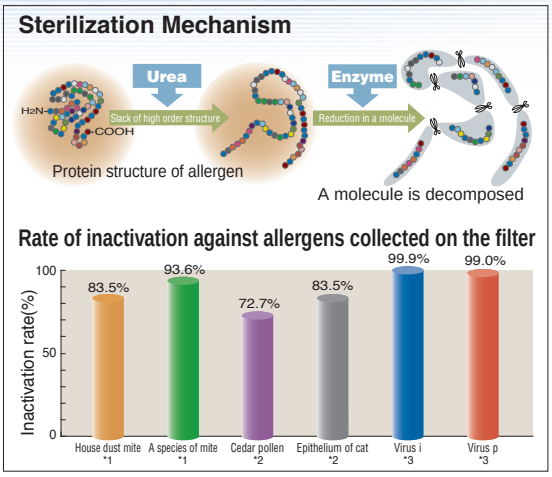

*1 Test method:
ELISA colorimetric method / ELISA fluorescent method
Laboratory:
Independent administrative agency national hospital mechanism Sagamihara Hospital, No.1536
*2 Test method:
ELISA colorimetric method
Laboratory:
Independent administrative agency national hospital mechanism Sagamihara Hospital, No.1536
*3 Test method:
TCID (Infection value 50%)
Laboratory:
Foundation of Kitazato Environmental Science Center, No.15-0145

Sure to destroy fungi and bacteria, also effective on viruses and allergenic compounds (Cat hair, dust mite, pollen etc.)

Natural Enzyme Filter

The first release in this range of the enzyme-sterilizing filter

Enzymes used in these filters are naturally occurring lytic enzymes.
The lytic enzymes attack cell walls of microorganisms trapped on a filter and destroy them and doing so, have a powerful sterilizing which will effect decrease the number of molds and bacteria Natural Enzyme Filter will clean and sanitize air passing through it to keep air in the room clean and safe.

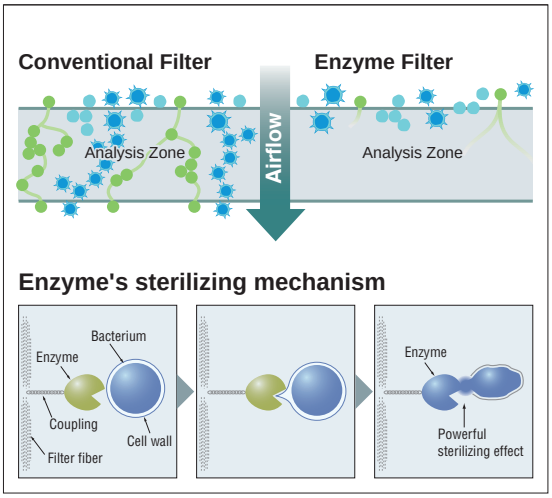

The deodorizing ability of this filter can be easily restored simply by cleaning and exposing to the sunlight

Photocatalytic Washable Deodorizing Filter

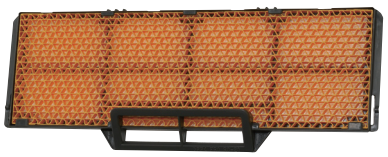

It will keep the air fresh by deodorizing the molecules causing odor. Its deodorizing power can be restored by washing with water and drying under the sun, as such it is a Recycling deodorizing filter capable of repeat use.

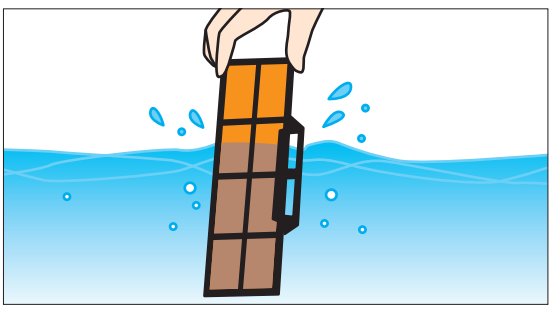

Used in models

Filter \ Indoor Unit	SRK-ZMX	SRK-ZR	SRK-ZM	SRK-ZMP	SRF-ZMX	SRK-HG	SRK-HE
Allergen Clear Filter	1pc	1pc	1pc	–	–	–	–
Natural Enzyme Filter	–	–	–	–	1pc	1pc	1pc
Photocatalytic Washable Deodorizing Filter	1pc	1pc	1pc	–	1pc	1pc	1pc

Applied models
All SRK

Anti-microbial specifications and design will deliver cleanliness and safety

Anti-microbial Fan

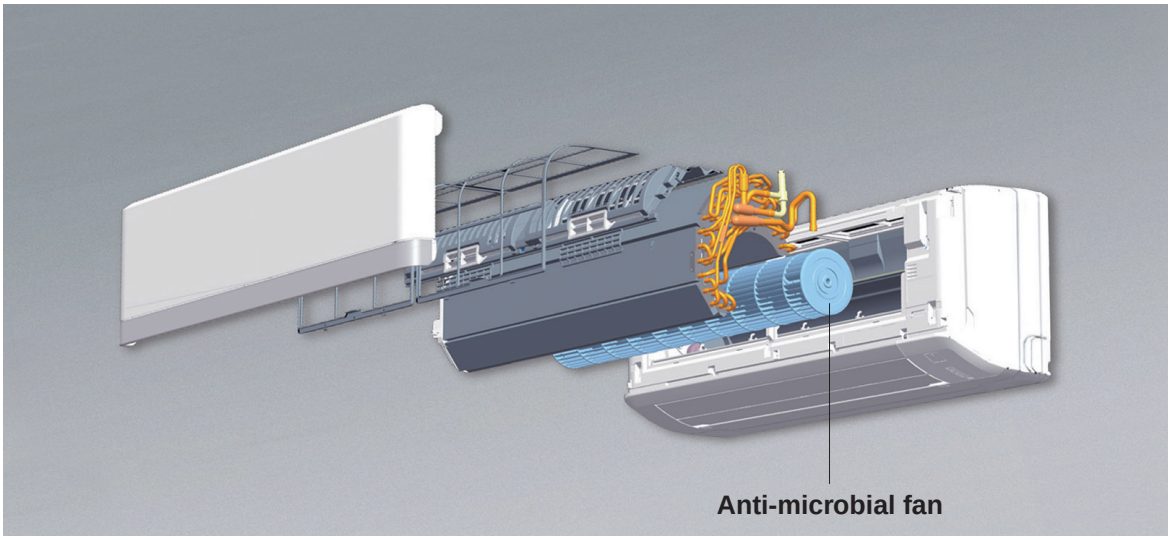

The fan has undergone anti-microbial treatment to resist mold and germs, making the system clean and safe. Foul odors and molds, etc. which can occur when an air conditioning system is not in operation are prevented.

Comparison of growth of bacteria and mold on fan surfaces (microscopic image)

• Aspergillus niger IFO 6341
Testing Authority: Japan Food Analysis Center
Test Results Issued: 2004-4-23.
Test Report No.: 104034022-002
Tests were conducted with reference to the antimicrobial strength tests in JIS Z 2801 2000 "Antimicrobial Products-Antimicrobial Test Method" –5.2 Antimicrobial Effects: Test Methods for Plastic Products, etc.

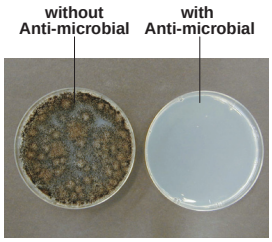

Aspergillus niger IFO 6341

In tests conducted at the Mitsubishi Heavy Industries Nagoya Research Lab, 24 hrs after contact with bacteria, cultured on agar media.

Applied models
SRK-ZMX,
SRK-ZR,
SRK-ZM,
SRF-ZMX

Weekly Timer Operation

Up to 4 programs with timer operation (ON-TIMER / OFF-TIMER) are available for each day of the week. Maximum 28 programs per week can be set.
Once set, the timer operation will repeat the same program every week unless otherwise canceled.

Available operation setting with weekly timer
- Operation mode (Auto, cooling, heating, dry, fan)
- Temp. setting
- Air flow volume, direction
- ECONO, Night Setback, Silent mode

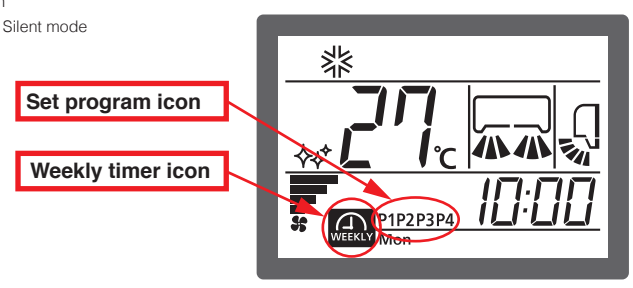

Weekly timer can be set by use of these buttons.

Wide Operation Range

Applied models
All inverter models

Heating and cooling operations are possible at an outdoor temperature as low as –15˚C.

Our new advanced technology has expanded the heating and cooling operation range.
This permits installation of the units considering a heating and cooling operation under a low temperature condition down to –15C.

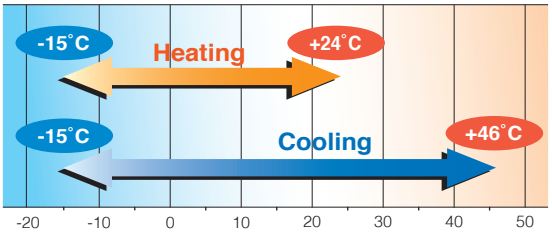

✻For the capacities under low temperature conditions, refer to technical manual.

Hi quality air long reach & silent flow

Quiet Operation (indoor)

This is the secret of quiet operation.

In addition to a jet airflow system delivering uniform winds to every corner, it has an optimized serration stabilizer configuration, which ensures smooth wind flow. It makes it possible to lower operation noises further by minimizing the interaction between wind flows and the fan.

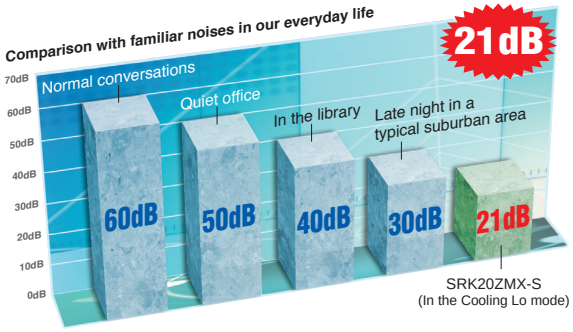

Silent Operation (outdoor)

Applied models
SRK-ZMX, SRK-ZR, SRK-ZM, SRF-ZMX, SRR-ZM

When Silent operation is set, the maximum pressure level of the outdoor unit will be 3dB(A) lower than standard nominal level (45dB(A) or less).
The compressor speed is set at a lower range than that of nominal operation, operating at 60% of nominal capacity.
Maximum fan speed of outdoor unit is set lower than nominal operation.

Three Sensors

Applied models
①②
All SRK, SRF, SRR, FDTC
③
SRK50/60ZMX, SRK35~50ZM, SRK63~80ZR, SRK35/45ZMP, SRF-ZMX, SRR-ZM

Control of room temperature and humidity is very important for people to live a comfortable life.
Use of three sensors to control indoor temperature, indoor humidity and outdoor temperature enable unit to obtain optimum air-conditioning.

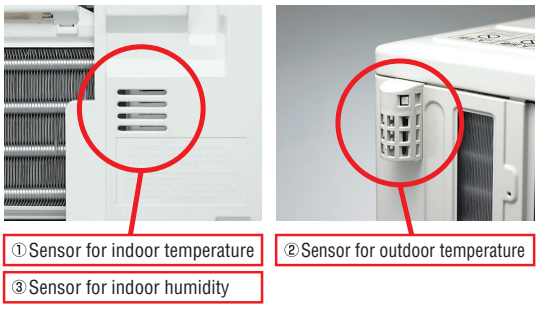

Night Setback Operation

Applied models
SRK-ZMX, SRK-ZR, SRK-ZM, SRF-ZMX, SRR-ZM

During cold seasons, room temperatures can be maintained at a comfortable level even while the room is unattended.
The air conditioner keeps the temperature at 10C.

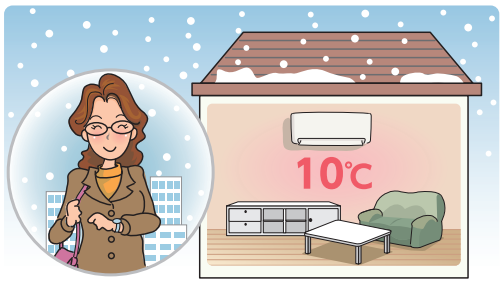

Product Line Up

	Model	Capacity Range (kW : Rated cooling capacity) 2.0	2.5	2.8	3.5	4.0	4.5	5.0	5.6	6.0	6.3	7.1	8.0	page
HEAT PUMP DC INVERTER	SRK-ZMX Diamond Series *2	A++ 20ZMX-S	A++ 25ZMX-S		A++ 35ZMX-S			A++ 50ZMX-S		A+ 60ZMX-S				14
	SRK-ZR Diamond Series *2										A++ 63ZR-S	A++ 71ZR-S	A++ 80ZR-S	15
	SRK-ZM Premium Series *2	A++ 20ZM-S	A++ 25ZM-S		A++ 35ZM-S			A++ 50ZM-S						16
	SRK-ZMP Standard Series		A 25ZMP-S		A++ 35ZMP-S		A 45ZMP-S							17
HEAT PUMP CONSTANT SPEED	SRK-HG *1	20HG-S		28HG-S		40HG-S								18
	SRK-HE *1							50HE-S1	56HE-S1		63HE-S1	71HE-S1		19
HEAT PUMP DC INVERTER	SRF-ZMX *2		A++ 25ZMX-S		A++ 35ZMX-S			A+ 50ZMX-S						20
	SRR-ZM *2 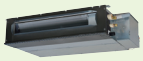		A++ 25ZM-S		A++ 35ZM-S									22
	FDTC-VF Fits into standard 600 x 600 ceiling *2		A+ 25VF		A++ 35VF	A++ 40VF		A+ 50VF		A+ 60VF				23

	Model	2.0	2.5	3.5	4.0	4.5	5.0	6.0	7.1	8.0	100	125	page
INVERTER Free-Multi	SRK-ZMX Diamond Series *2	20ZMX-S	25ZMX-S	35ZMX-S			50ZMX-S	60ZMX-S					26
	SRK-ZR Diamond Series *2								71ZR-S				26
	SRK-ZM Premium Series *2	20ZM-S	25ZM-S	35ZM-S			50ZM-S						27
	SRF-ZMX *2		25ZMX-S	35ZMX-S			50ZMX-S						27
	SRR-ZM *2		25ZM-S	35ZM-S			50ZM-S	60ZM-S					28
	FDTC-VF Fits into standard 600 x 600 ceiling *2		25VF	35VF			50VF	60VF					28
	FDUM-VF						50VF						29
	FDE-VG						50VF						29
	OUTDOOR UNIT SCM *3				A+ 40ZM-S	A+ 45ZM-S	A++ 50ZM-S	A++ 60ZM-S					25
									A++ 71ZM-S	A++ 80ZM-S			25
											A 100ZM-S	*4 125ZM-S	25

*1 Not available in EU/EEA
*2 Common to the both cases
*3 Energy class is changed with combination of indoor units.
*4 Energy label applies below cooling capacity 12kW.

Functions

Clean Operation / Filter

Allergen Clear System
The system is equipped to suppress the influence of the allergen caught by the filter by controlled the temperature and humidity.

Self Clean Operation
The operation is operated for 2 hours after the unit has stopped its normal operation. The indoor unit is dried up and growth of mold is restrained.

Allergen Clear Filter
The filter breaks down the pollen, lice, and all allergens that live on cat skins, etc. and deactivates them.

Photocatalytic Washable Deodorizing Filter
It keeps air fresh by deodorizing the molecules causing odor. The deodorizing ability can be easily restored simply by cleaning and exposing to the sunlight.

Natural Enzyme Filter
Enzymes used in the filter are naturally occurring lytic enzymes which attack cell walls of microorganisms trapped on the filter and destroy them.

Comfortable Functions

Fuzzy Auto Mode
Automatically, the unit determines its operating mode and temperature setting based on a fuzzy calculation, and adjusts the inverter frequency.

Automatic Operation
The air conditioner automatically selects from among heating, cooling and dry operations.

"HI POWER" Operation
The unit can operate continuously in "HI POWER" mode for 15 minutes. This mode is convenient to reach the desired temperature quickly.

Three "Hot" System
This series offers three "hot" systems. "Hot start" allows the unit to begin operating immediately, while the "hot spurt" fast-heating system works to increase the temperature setting by two degrees. The "hot keep" system is used during automatic defrosting or to prevent the influx of cool air. These three operational control systems help ensure comfortable and efficient heating.

Comfortable Air Flow Functions

3D Auto
You can choose the best cooling or heating pattern by only pushing one button.

Auto Flap Mode
Whatever the operating mode is, the unit automatically selects the optimal angle.

Memory Flap
While the flap is swinging, it can be stopped at any angle desired. The flap returns to the position that it was in when operation last stopped.

Air Scroll
The swing of the flap causes the air flow to spiral as it reaches the floor, and breeze reaches all of a room.

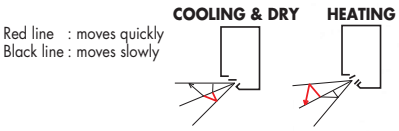

Positioning of Installation
You can set the left-right air flow directions when you installed the air conditioner near the side wall by remote controller operation.

Up/Down Flap Swing
Flap moves up and down continuously. The Up/Down flap swing can be fixed at the preferred operation angle.

Right/Left Louver swing
Louver moves right and left continuously. The Right/Left louver swing can be fixed at the preferred operation angle.

Air Outlet Selection
Both lower and upper air outlets and upper air outlet can be selected.

Convenience & Economy Functions

Weekly timer
Up to 4 programs with timer operation (ON-TIMER/OFF-TIMER) are available for each day of the week. MAX 28 programs per week can be set.

24-hour On/Off Programmable Timer
By combining a start timer with a stop timer, you can register two timer operations a day. Once set, timers will faithfully start or stop the system at a specified time of the day repeatedly.

On Timer
This facility enables the operation to start a little earlier, so that the room approaches optimum temperature at ON time when the operation is started by ON-TIMER.
Thus it will try to be at the temperature you want, when you want.

Off Timer
The unit stops automatically at the set time.

Dry Operation
The unit dehumidifies the room by intermittent cooling operation.

Economy Mode
The unit realizes effective energy saving operation, while still keeping a comfortable cooling and heating condition.

Sleep Mode
The room temperature is automatically controlled during the set sleep mode period, ensuring that room temperature will not get too cold or too hot.

Silent operation
The sound level of outdoor units is at least 3 dB(A) lower than the nominal level.

Night setback
During cold seasons, room temperatures can be maintained at a comfortable level even while the room is unattended.
The air conditioner keeps the temperature at 10˚C.

Maintenance & Prevention Functions

Microcomputer-Operated Defrosting
This mode automatically eliminates frost, and helps minimize excessive operation in other modes.

Self-Diagnostic Function
In the case that the air conditioner malfunctions, an internal microcomputer automatically runs a self-diagnosis. (Inspection and repair should be performed by authorized dealers.)

Detachable Indoor Air Inlet Panel
The air inlet panel on the indoor unit opens and closes easily, making filter cleaning simple. The suction panel can also be removed.

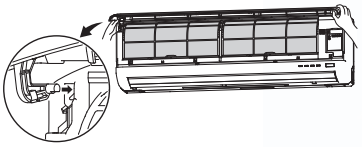

When removing the air inlet panel for internal cleaning or others, open the grill and then pull it to this side.

Others

Back-up Switch
On the main unit,there is a backup on/off switch, which is useful when you can't use remote control, or batteries are flat.

Auto Restart Function
Power blackout auto restart function is a function that records the operational status of the air-conditioner immediately prior to it being switched off by a power cut, and then automatically resumes operations at that point after the power has been restored.

24-hour ION
Tourmaline-coated sheet generates negative ions around the clock. Even when the air conditioner is not running, it generates as many negative ions as a forest, stream or fall does, allowing you to experience them without incurring any electricity charges.

Luminous Button
With wireless “Luminous” remote controls that even “glow in the dark”, it is possible to operate all desired functions of the unit with the click of a button.

Diamond Series

SRK-ZMX

Wall Mounted type

R410A

SRK20ZMX-S, SRK25ZMX-S, SRK35ZMX-S
SRK50ZMX-S, SRK60ZMX-S

Single Multi

All SRK-ZMX series can be selected for use as indoor units in the combination with SCM Multi system outdoor unit.

Single Multi

SRK50/60ZMX can be selected for use as indoor units in the combination with V Multi system outdoor unit. Refer to our Inverter Packaged Air-Conditioners brochure for details.

Standard equipment

SRC20ZMX-S, SRC25ZMX-S, SRC35ZMX-S

SRC50ZMX-S, SRC60ZMX-S

FUNCTION

Allergen System | Self Clean Operation | Allergen Filter | SUN Filter

Comfortable Functions

Fuzzy | Auto | HI POWER

Comfortable Air Flow Functions

3D Auto | Auto Flap | Memory | UP/DOWN | Lateral Swing | Positioning of installation

Convenient & Economy Functions

On Weekly timer Off | On Timer | OFF Timer | DRY | Economy | Sleep | Silent | Night setback 10°C

Maintenance & Prevention Functions

MC | Self Diagnostic | Detachable

Others

Back-up Switch | Auto Restart | 24h ION | Luminous

Refrigerant pipe length

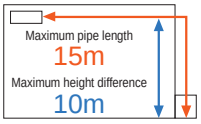

SRK20ZMX-S
SRK25ZMX-S
SRK35ZMX-S

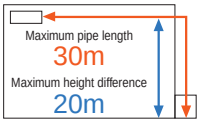

SRK50ZMX-S
SRK60ZMX-S

SPECIFICATIONS

Indoor unit				SRK20ZMX-S	SRK25ZMX-S	SRK35ZMX-S	SRK50ZMX-S	SRK60ZMX-S
Outdoor unit				SRC20ZMX-S	SRC25ZMX-S	SRC35ZMX-S	SRC50ZMX-S	SRC60ZMX-S
Power source				1Phase, 220 - 240V, 50Hz				
Nominal cooling capacity (Min~Max)			kW	2.0 (0.9~3.1)	2.55 (0.9~3.2)	3.5 (0.9~4.1)	5.0 (1.1~5.8)	6.1 (1.1~6.8)
Nominal heating capacity (Min~Max)			kW	2.5 (0.9~4.3)	3.13 (0.9~4.7)	4.3 (0.9~5.1)	6.0 (0.6~7.7)	6.8 (0.6~8.2)
Power consumption		Cooling/Heating	kW	0.35 / 0.45	0.49 / 0.595	0.845 / 0.96	1.30 / 1.36	1.87 / 1.67
EER/COP		Cooling/Heating		5.71 / 5.56	5.20 / 5.26	4.14 / 4.48	3.85 / 4.41	3.26 / 4.07
Inrush current		220/230/240 V	A	2.4 / 2.3 / 2.2	3.1 / 2.9 / 2.8	4.6 / 4.4 / 4.2	6.2 / 6.0 / 5.7	8.6 / 8.2 / 7.9
Max. running current				8	8	8	15	15
*Sound power level	Indoor	Cooling/Heating	dB(A)	53 / 54	55 / 58	58 / 59	60 / 64	64 / 64
	Outdoor	Cooling/Heating		60 / 59	60 / 60	63 / 62	63 / 63	65 / 64
*Sound pressure level	Indoor	Cooling (Hi/Me/Lo/Ulo)		39 / 30 / 24 / 21	41 / 31 / 25 / 22	43 / 33 / 25 / 22	47 /40 / 27 / 25	51 /41 / 29 / 25
		Heating (Hi/Me/Lo/Ulo)		38 / 33 / 25 / 21	41 / 34 / 27 / 21	42 / 35 / 27 / 22	48 / 40 / 33 / 26	48 / 41 / 34 / 27
	Outdoor	Cooling/Heating		47 / 47	47 / 47	50 / 50	54 / 50	54 / 54
Air flow	Indoor	Cooling (Hi/Me/Lo/Ulo)	m^3/min	11.5 / 8.0 / 6.3 / 5.0	12.5 / 9.0 / 6.3 / 5.0	13.5 / 9.5 / 6.5 / 5.0	13.5 / 11.0 / 8.0 / 7.0	14.5 / 12.5 / 8.5 / 7.0
		Heating (Hi/Me/Lo/Ulo)		12.0 / 9.5 / 7.0 / 6.3	13.0 / 10.0 / 7.5 / 6.3	14.0 / 11.0 / 8.0 / 6.5	17.0 / 14.5 / 10.5 / 8.0	17.5 / 15.0 / 11.0 / 8.5
	Outdoor	Cooling/Heating		29.5 / 27.0	29.5 / 27.0	32.5 / 29.5	39.0 / 33.0	41.5 / 39.0
Exterior dimensions	Indoor	HeightxWidthxDepth	mm	309 x 890 x 220				
	Outdoor			595 x 780(+62) x 290			640 x 800(+71) x 290	
Net weight	Indoor / Outdoor		kg	13.5 / 35			13.5 / 45	
Ref.piping size	Liquid/Gas		Ømm	6.35(1/4") / 9.52(3/8")			6.35(1/4") / 12.7(1/2")	
Refrigerant line (one way) length			m	Max.15			Max. 30	
Vertical height differences		Outdoor is higher/lower	m	Max.10 / Max.10			Max.20 / Max.20	
Outdoor operating temperature range		Cooling	˚C	-15~46				
		Heating		-15~24				
Clean filter				Allergen Clear Filter x 1, Photocatalytic Washable Deodorizing Filter x 1				

The data are measured under the following conditions(ISO-T1). Cooling: Indoor temp. of 27˚CDB, 19˚CWB, and outdoor temp. of 35˚CDB. Heating: Indoor temp. of 20˚CDB, and outdoor temp. of 7˚CDB, 6˚CWB.
* Indicates the value in an anechoic chamber.During operation these values are somewhat higher due to ambient conditions.

INVERTER HEAT PUMP MODEL

Diamond Series

SRK-ZR

Wall Mounted type

R410A

SRK63ZR-S, SRK71ZR-S, SRK80ZR-S

Single Multi

SRK71ZR-S can be selected for use as indoor units in the combination with SCM Multi system outdoor unit.

Refrigerant pipe length

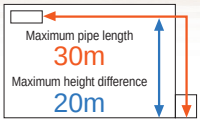

SRK63ZR-S
SRK71ZR-S
SRK80ZR-S

Standard equipment

SRC63ZR-S

SRC71ZR-S, SRC80ZR-S

FUNCTION

Allergen System | Self Clean Operation | Allergen Filter | SUN Filter

Comfortable Functions

Fuzzy | Auto | HI POWER

Comfortable Air Flow Functions

3D Auto | Auto Flap | Memory | UP/DOWN | Lateral Swing | Positioning of installation

Convenient & Economy Functions

On Weekly timer Off | On Timer | OFF Timer | DRY | Economy | Sleep | Silent | Night setback 10°C

Maintenance & Prevention Functions

MC | Self Diagnostic | Detachable

Others

Back-up Switch | Auto Restart | 24h ION | Luminous

SPECIFICATIONS

Indoor unit				SRK63ZR-S	SRK71ZR-S	SRK80ZR-S
Outdoor unit				SRC63ZR-S	SRC71ZR-S	SRC80ZR-S
Power source				1 Phase, 220 - 240V, 50Hz		
Nominal cooling capacity (Min~Max)			kW	6.3 (1.2~7.1)	7.1 (2.3~7.7)	8.0 (2.3~9.0)
Nominal heating capacity (Min~Max)			kW	7.1 (0.8~9.0)	8.0 (2.0~10.0)	9.0 (2.1~10.5)
Power consumption		Cooling/Heating	kW	1.85 / 1.74	2.05 / 2.06	2.35 / 2.40
EER/COP		Cooling/Heating		3.41 / 4.08	3.46 / 3.88	3.40 / 3.75
Inrush current		220/230/240 V	A	8.5 / 8.1 / 7.8	9.6 / 9.1 / 8.8	11.1 / 10.6 / 10.2
Max. running current				14.5	17	17
*Sound power level	Indoor	Cooling/Heating	dB(A)	58 / 58	58 / 60	62 / 62
	Outdoor	Cooling/Heating		67 / 66	65 / 63	68 / 67
*Sound pressure level	Indoor	Cooling (Hi/Me/Lo/Ulo)		44 / 39 / 35 / 25	44 / 41 / 37 / 25	47 / 44 / 39 / 26
		Heating (Hi/Me/Lo/Ulo)		44 / 38 / 34 / 28	46 / 39 / 35 / 28	47 / 41 / 36 / 29
	Outdoor	Cooling/Heating		54 / 54	53 / 51	56 / 55
Air flow	Indoor	Cooling (Hi/Me/Lo/Ulo)	m^3/min	20.5 / 18.1 / 15.7 / 10.4	20.5 / 18.6 / 16.2 / 10.4	23.5 / 20.2 / 17.5 / 10.4
		Heating (Hi/Me/Lo/Ulo)		23.5 / 19.0 / 16.5 / 13.1	25.5 / 19.8 / 17.3 / 13.3	26.5 / 21.3 / 18.4 / 13.5
	Outdoor	Cooling/Heating		41.5 / 41.5	55 / 43.5	63 / 49.5
Exterior dimensions	Indoor	HeightxWidthxDepth	mm	339 x 1197 x 262		
	Outdoor			640 x 800(+71) x 290	750 x 880(+88) x 340	
Net weight	Indoor / Outdoor		kg	15.5 / 45	15.5 / 57	16.5 / 58.5
Ref.piping size	Liquid/Gas		Ømm	6.35(1/4") / 12.7(1/2")	6.35(1/4") / 15.88(5/8")	
Refrigerant line (one way) length			m	Max.30		
Vertical height differences		Outdoor is higher/lower	m	Max.20 / Max.20		
Outdoor operating temperature range		Cooling	°C	-15~46		
		Heating		-15~24		
Clean filter				Allergen Clear Filter x 1, Photocatalytic Washable Deodorizing Filter x 1		

The data are measured under the following conditions(ISO-T1). Cooling: Indoor temp. of 27°CDB, 19°CWB, and outdoor temp. of 35°CDB. Heating: Indoor temp. of 20°CDB, and outdoor temp. of 7°CDB, 6°CWB.
* Indicates the value in an anechoic chamber.During operation these values are somewhat higher due to ambient conditions.

INVERTER HEAT PUMP MODEL

Premium Series

SRK-ZM

Wall Mounted type

R410A

SRK20ZM-S, SRK25ZM-S
SRK35ZM-S, SRK50ZM-S

Single Multi

All SRK-ZM series can be selected for use as indoor units in the combination with SCM Multi system outdoor unit.

Refrigerant pipe length

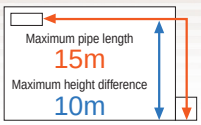

SRK20ZM-S, SRK25ZM-S
SRK35ZM-S

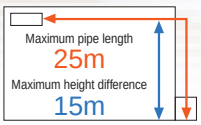

SRK50ZM-S

Standard equipment

SRC20ZM-S, SRC25ZM-S
SRC35ZM-S

SRC50ZM-S

FUNCTION

Allergen System | Self Clean Operation | Allergen Filter | SUN Filter

Comfortable Functions

Fuzzy | Auto | HI POWER

Comfortable Air Flow Functions

3D Auto | Auto Flap | Memory | UP/DOWN | Lateral Swing | Positioning of installation

Convenient & Economy Functions

On Weekly timer Off | On Timer | OFF Timer | DRY | Economy | Sleep | Silent | Night setback 10°C

Maintenance & Prevention Functions

MC | Self Diagnostic | Detachable

Others

Back-up Switch | Auto Restart | Luminous

SPECIFICATIONS

				SRK20ZM-S	SRK25ZM-S	SRK35ZM-S	SRK50ZM-S
Indoor unit				SRC20ZM-S	SRC25ZM-S	SRC35ZM-S	SRC50ZM-S
Outdoor unit							
Power source				1 Phase, 220 - 240V, 50Hz			
Nominal cooling capacity (Min~Max)			kW	2.0(1.0~2.7)	2.5(1.0~2.9)	3.5(1.0~3.8)	5.0(1.6~5.5)
Nominal heating capacity (Min~Max)			kW	2.7(1.2~3.9)	3.2(1.2~4.2)	4.0(1.3~4.8)	5.8(1.6~6.6)
Power consumption		Cooling/Heating	kW	0.44 / 0.62	0.62 / 0.80	1.01 / 1.00	1.55 / 1.59
EER/COP		Cooling/Heating		4.55 / 4.35	4.03 / 4.00	3.47 / 4.00	3.23 / 3.65
Inrush current		220/230/240 V	A	3.2 / 3.1 / 3.0	4.0 / 3.8 / 3.7	4.9 / 4.7 / 4.5	7.3 / 7.0 / 6.7
Max. running current				9	9	9	14
*Sound power level	Indoor	Cooling/Heating	dB(A)	49 / 52	50 / 55	58 / 59	60 / 61
	Outdoor	Cooling/Heating		59 / 58	60 / 61	62 / 63	61 / 63
*Sound pressure level	Indoor	Cooling (Hi/Me/Lo/Ulo)		33 / 27 / 24 / 21	34 / 28 / 24 / 21	42 / 32 / 26 / 22	46 / 37 / 28 / 25
		Heating (Hi/Me/Lo/Ulo)		36 / 31 / 24 / 21	39 / 31 / 24 / 21	43 / 37 / 25 / 22	45 / 37 / 31 / 27
	Outdoor	Cooling/Heating		47 / 46	48 / 49	50 / 51	51 / 53
Air flow	Indoor	Cooling (Hi/Me/Lo/Ulo)	m^3/min	7.8 / 5.6 / 5.3 / 4.8	7.9 / 6.0 / 5.3 / 5.0	10.1 / 6.4 / 5.4 / 5.0	11.3 / 7.8 / 6.0 / 5.3
		Heating (Hi/Me/Lo/Ulo)		9.8 / 6.3 / 5.0 / 4.5	10.6 / 6.5 / 5.1 / 4.6	12.8 / 9.4 / 6.1 / 4.8	13.5 / 10.2 / 7.5 / 6.2
	Outdoor	Cooling/Heating		29.5 / 25.6	32.1 / 25.6	31.5 / 27.8	36.0 / 36.0
Exterior dimensions	Indoor	HeightxWidthxDepth	mm	294 x 798 x 229			
	Outdoor			540 x 780(+62) x 290			640 x 800(+71) x 290
Net weight	Indoor / Outdoor		kg	9.5 / 31.5		9.5 / 34.5	9.5 / 40.5
Ref.piping size	Liquid/Gas		ø mm	6.35(1/4") / 9.52(3/8")			6.35(1/4") / 12.7(1/2")
Refrigerant line (one way) length			m	Max. 15			Max. 25
Vertical height differences		Outdoor is higher/lower	m	Max. 10 / Max. 10			Max. 15 / Max. 15
Outdoor operating temperature range		Cooling	˚C	-15~46			
		Heating		-15~24			
Clean filter				Allergen Clear Filter x 1, Photocatalytic Washable Deodorizing Filter x 1			

The data are measured under the following conditions(ISO-T1). Cooling: Indoor temp. of 27˚CDB, 19˚CWB, and outdoor temp. of 35˚CDB. Heating: Indoor temp. of 20˚CDB, and outdoor temp. of 7˚CDB, 6˚CWB.
* Indicates the value in an anechoic chamber.During operation these values are somewhat higher due to ambient conditions.

INVERTER HEAT PUMP MODEL

Standard Series

SRK-ZMP

Wall Mounted type

R410A

SRK25ZMP-S, SRK35ZMP-S
SRK45ZMP-S

Refrigerant pipe length

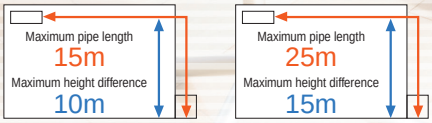

SRK25ZMP-S
SRK35ZMP-S

SRK45ZMP-S

Standard equipment

SRC25ZMP-S
SRC35ZMP-S

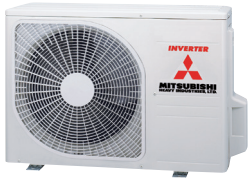

SRC45ZMP-S

FUNCTION

Comfortable Functions

Self Clean Operation, Fuzzy, Auto, HI POWER

Comfortable Air Flow Functions

Auto Flap, Memory, UP/DOWN

Convenient & Economy Functions

On 24h Timer Off, On Timer, OFF Timer, DRY, Economy, Sleep

Maintenance & Prevention Functions

MC, Self Diagnostic, Detachable

Others

Back-up Switch, Auto Restart, Luminous

SPECIFICATIONS

Indoor unit				SRK25ZMP-S	SRK35ZMP-S	SRK45ZMP-S
Outdoor unit				SRC25ZMP-S	SRC35ZMP-S	SRC45ZMP-S
Power source				1 Phase, 220 - 240V, 50Hz		
Nominal cooling capacity (Min~Max)			kW	2.5(0.9~2.8)	3.2(0.9~3.5)	4.5(0.9~4.8)
Nominal heating capacity (Min~Max)			kW	2.8(0.8~3.9)	3.6(0.9~4.3)	5.0(0.8~5.8)
Power consumption		Cooling/Heating	kW	0.78 / 0.755	0.995 / 0.995	1.495 / 1.385
EER/COP		Cooling/Heating		3.21/3.71	3.22 / 3.62	3.01 / 3.61
Inrush current		220/230/240 V	A	3.9 / 3.8 / 3.6	4.9 / 4.7 / 4.5	7.0 / 6.7 / 6.4
Max. running current				9	9	14
*Sound power level	Indoor	Cooling/Heating	dB(A)	59 / 58	60 / 58	60 / 64
	Outdoor	Cooling/Heating		60 / 59	60 / 60	65 / 65
*Sound pressure level	Indoor	Cooling (Hi/Me/Lo)		45 / 34 / 23	47 / 36 / 23	46 / 40 / 25
		Heating (Hi/Me/Lo)		43 / 34 / 26	44 / 36 / 28	48 / 43 / 32
	Outdoor	Cooling/Heating		47 / 45	49 / 48	52 / 53
Air flow	Indoor	Cooling (Hi/Me/Lo)	m^3/min	10.1 / 7.3 / 4.2	9.5 / 6.8 / 4.2	9.0 / 7.2 / 3.8
		Heating (Hi/Me/Lo)		9.5 / 7.3 / 5.2	9.6 / 7.4 / 5.5	12.0 / 9.2 / 6.2
	Outdoor	Cooling/Heating		26.0 / 19.7	25.4 / 20.5	35.5 / 33.5
Exterior dimensions	Indoor	HeightxWidthxDepth	mm	262 x 769 x 210		
	Outdoor			540 x 645(+57) x 275		595 x 780(+62) x 290
Net weight	Indoor / Outdoor		kg	6.9 / 25	7.2 / 27	7.6 / 40
Ref.piping size	Liquid/Gas		ø mm	6.35(1/4") / 9.52(3/8")		6.35(1/4") / 12.7(1/2")
Refrigerant line (one way) length			m	Max. 15		Max. 25
Vertical height differences		Outdoor is higher/lower	m	Max. 10 / Max. 10		Max. 15 / Max. 15
Outdoor operating temperature range		Cooling	˚C	-15~46		
		Heating		-15~24		
Clean filter				–		

The data are measured under the following conditions(ISO-T1). Cooling: Indoor temp. of 27˚CDB, 19˚CWB, and outdoor temp. of 35˚CDB. Heating: Indoor temp. of 20˚CDB, and outdoor temp. of 7˚CDB, 6˚CWB.
* Indicates the value in an anechoic chamber.During operation these values are somewhat higher due to ambient conditions.

SRK-HG

Wall Mounted type

R410A

*** Not available in EU/EEA**

SRK20HG-S, SRK28HG-S, SRK40HG-S

Refrigerant pipe length

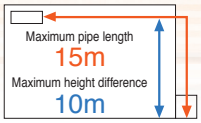

SRK20HG-S
SRK28HG-S
SRK40HG-S

Standard equipment

SRC20HG-S, SRC28HG-S, SRC40HG-S

FUNCTION

SPECIFICATIONS

				SRK20HG-S	SRK28HG-S	SRK40HG-S
Indoor unit						
Outdoor unit				SRC20HG-S	SRC28HG-S	SRC40HG-S
Power source				1 Phase, 220 - 240V, 50Hz		
Nominal cooling capacity (Min~Max)			kW	2.07	2.6	3.6
Nominal heating capacity (Min~Max)			kW	2.22	2.8	3.92
Power consumption		Cooling/Heating	kW	0.64 / 0.61	0.81 / 0.77	1.12 / 1.15
EER/COP		Cooling/Heating		3.23 / 3.64	3.21 / 3.64	3.21 / 3.41
Inrush current		220/230/240 V	A	18.9	17.2	25.2
*Sound power level	Indoor	Cooling/Heating	dB(A)	52 / 52	55 / 56	56 / 57
	Outdoor	Cooling/Heating		60 / 60	60 / 60	63 / 66
*Sound pressure level	Indoor	Cooling (Hi/Me/Lo)		34 / 30 / 27	39 / 33 / 30	40 / 38 / 34
		Heating (Hi/Me/Lo)		34 / 31 / 27	40 / 33 / 29	40 / 38 / 34
	Outdoor	Cooling/Heating		46 / 46	46 / 46	49 / 52
Air flow	Indoor	Cooling (Hi/Me/Lo)	m^3/min	7.5	8.5	9.0
		Heating (Hi/Me/Lo)		7.5	10.0	10.0
	Outdoor	Cooling/Heating		27.0 / 27.0	29.0 / 29.0	32.0 / 32.0
Exterior dimensions	Indoor	HeightxWidthxDepth	mm	268 x 790 x 199		
	Outdoor			540 x 780(+62) x 290		
Net weight	Indoor / Outdoor		kg	8.5 / 29	8.5 / 31	8.5 / 38
Ref.piping size	Liquid/Gas		ø mm	6.35(1/4") / 9.52(3/8")		6.35(1/4") / 12.7(1/2")
Refrigerant line (one way) length			m	Max. 15		
Vertical height differences		Outdoor is higher/lower	m	Max. 10 / Max. 10		
Outdoor operating temperature range		Cooling	˚C	21~43		
		Heating		-5~21		
Clean filter				Natural Enzyme Filter x 1 Photocatalytic Washable Deodorizing Filter x 1		

The data are measured under the following conditions(ISO-T1). Cooling: Indoor temp. of 27˚CDB, 19˚CWB, and outdoor temp. of 35˚CDB. Heating: Indoor temp. of 20˚CDB, and outdoor temp. of 7˚CDB, 6˚CWB.
* Indicates the value in an anechoic chamber.During operation these values are somewhat higher due to ambient conditions.

SRK-HE

Wall Mounted type

R410A

* Not available in EU/EEA

SRK50HE-S1, SRK56HE-S1

Standard equipment

SRK63HE-S1, SRK71HE-S1

Standard equipment

Refrigerant pipe length

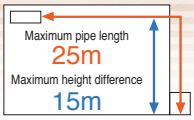

SRK50HE-S1 SRK63HE-S1
SRK56HE-S1 SRK71HE-S1

SRC50HE-S1, SRC56HE-S1, SRC63HE-S1

SRC71HE-S1

FUNCTION

Comfortable Functions

Comfortable Air Flow Functions

SRK63/71HE-S1

Convenient & Economy Functions

SRK63/71HE-S1

Maintenance & Prevention Functions

Others

SRK63/71HE-S1

SPECIFICATIONS

				SRK50HE-S1	SRK56HE-S1	SRK63HE-S1	SRK71HE-S1
Indoor unit							
Outdoor unit				SRC50HE-S1	SRC56HE-S1	SRC63HE-S1	SRC71HE-S1
Power source				1 Phase, 220 - 240V, 50Hz			
Nominal cooling capacity (Min~Max)			kW	4.7	5.1	6.3	7.1
Nominal heating capacity (Min~Max)			kW	5.3	5.8	6.7	7.5
Power consumption		Cooling/Heating	kW	1.41 / 1.40	1.59 / 1.58	2.19 / 1.85	2.21 / 2.07
EER/COP		Cooling/Heating		3.33 / 3.79	3.21 / 3.67	2.88 / 3.62	3.21 / 3.62
Inrush current		220/230/240 V	A	39.6	45.2	53	49
*Sound power level	Indoor	Cooling/Heating	dB(A)	58 / 61	59 / 61	59 / 60	57 / 60
	Outdoor	Cooling/Heating		63 / 64	64 / 65	65 / 65	69 / 70
*Sound pressure level	Indoor	Cooling (Hi/Me/Lo)		43 / 39 / 34	44 / 40 / 35	44 / 40 / 37	45 / 41 / 38
		Heating (Hi/Me/Lo)		44 / 39 / 35	44 / 39 / 35	45 / 41 / 37	46 / 41 / 38
	Outdoor	Cooling/Heating		47 / 49	49 / 51	49 / 49	54 / 55
Air flow	Indoor	Cooling (Hi/Me/Lo)	m^3/min	10.0	11.0	18.0	19.0
		Heating (Hi/Me/Lo)		12.5	12.5	20.5	21.0
	Outdoor	Cooling/Heating		38.0 / 38.0	38.0 / 38.0	42.0 / 42.0	60.0 / 60.0
Exterior dimensions	Indoor	HeightxWidthxDepth	mm	298 x 840 x 259		318 x 1098 x 248	
	Outdoor			640 x 850(+65) x 290			750 x 880(+88) x 340
Net weight	Indoor / Outdoor		kg	12 / 44	12 / 44	15 / 47	15 / 68
Ref.piping size	Liquid/Gas		ø mm	6.35(1/4") / 12.7(1/2")			6.35(1/4") / 15.88(5/8")
Refrigerant line (one way) length			m	Max. 25			
Vertical height differences		Outdoor is higher/lower	m	Max. 15 / Max. 15			
Outdoor operating temperature range		Cooling	˚C	21~43			
		Heating		-5~21			
Clean filter				Natural Enzyme Filter x 1 Photocatalytic Washable Deodorizing Filter x 1			

The data are measured under the following conditions(ISO-T1). Cooling: Indoor temp. of 27˚CDB, 19˚CWB, and outdoor temp. of 35˚CDB. Heating: Indoor temp. of 20˚CDB, and outdoor temp. of 7˚CDB, 6˚CWB.
* Indicates the value in an anechoic chamber.During operation these values are somewhat higher due to ambient conditions.

SRF-ZMX

Floor Standing type

R410A

Standard equipment

SRF25ZMX-S, SRF35ZMX-S, SRF50ZMX-S

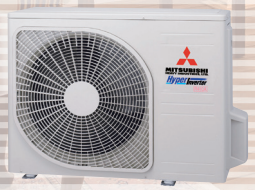

SRC25ZMX-S, SRC35ZMX-S

SRC50ZMX-S

Single Multi

All SRF-ZMX series can be selected for use as indoor units in the combination with SCM Multi system outdoor unit.

The highest SEER/SCOP level in the industry

Our experience, research and development efforts with the floor standing series have realized the highest SEER/SCOP level in the industry. Indoor units are totally new design with optimum balance of air outlet direction and sufficient air flow volume.

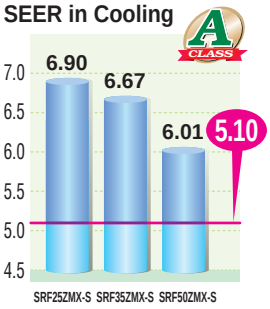

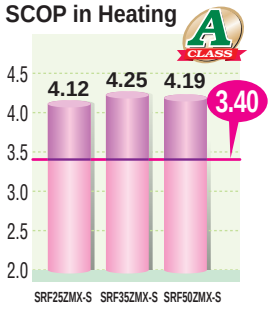

FUNCTION

Refrigerant pipe length

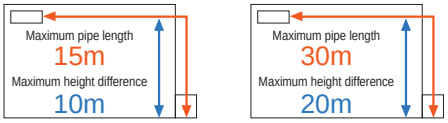

SPECIFICATIONS

				SRF25ZMX-S	SRF35ZMX-S	SRF50ZMX-S
Indoor unit						
Outdoor unit				SRC25ZMX-S	SRC35ZMX-S	SRC50ZMX-S
Power source				1 Phase, 220 - 240V, 50Hz		
Nominal cooling capacity (Min~Max)			kW	2.5 (0.9~3.2)	3.5 (0.9~4.1)	5.0 (1.1~5.2)
Nominal heating capacity (Min~Max)			kW	3.4 (0.9~4.7)	4.5 (0.9~5.1)	6.0 (0.6~6.9)
Power consumption		Cooling/Heating	kW	0.521 / 0.723	0.890 / 1.124	1.390 / 1.540
EER/COP		Cooling/Heating		4.80 / 4.70	3.93 / 4.00	3.60 / 3.90
Inrush current		220/230/240 V	A	3.6 / 3.4 / 3.3	5.2 / 4.9 / 4.7	7.1 / 6.8 / 6.5
Max. running current				8	8	15
*Sound power level	Indoor	Cooling/Heating	dB(A)	51 / 51	52 / 52	58 / 58
	Outdoor	Cooling/Heating		60 / 60	63 / 62	63 / 62
*Sound pressure level	Indoor	Cooling (Hi/Me/Lo/Ulo)		40 / 32 / 29 / 26	41 / 34 / 32 / 28	46 / 42 / 35 / 32
		Heating (Hi/Me/Lo/Ulo)		40 / 35 / 33 / 28	41 / 36 / 35 / 31	47 / 41 / 39 / 33
	Outdoor	Cooling/Heating		47 / 47	50 / 50	52 / 51
Air flow	Indoor	Cooling (Hi/Me/Lo/Ulo)	m^3/min	9.0 / 7.6 / 6.7 / 5.8	9.2 / 7.8 / 7.3 / 6.4	11.5 / 9.6 / 7.4 / 6.6
		Heating (Hi/Me/Lo/Ulo)		10.5 / 8.2 / 7.7 /6.6	10.7 / 8.3 / 8.1 / 7.4	12.0 / 10.0 / 9.4 / 7.6
	Outdoor	Cooling/Heating		29.5 / 27.0	32.5 / 29.5	39.0 / 33.0
Exterior dimensions	Indoor	HeightxWidthxDepth	mm	600 x 860 x 238		
	Outdoor			595 x 780(+62) x 290		640 x 800(+71) x 290
Net weight	Indoor / Outdoor		kg	18 / 35	19 / 35	19 / 45
Ref.piping size	Liquid/Gas		ø mm	6.35(1/4") / 9.52(3/8")		6.35(1/4") / 12.7(1/2")
Refrigerant line (one way) length			m	Max. 15		Max. 30
Vertical height differences		Outdoor is higher/lower	m	Max. 10 / Max. 10		Max. 20 / Max. 20
Outdoor operating temperature range		Cooling	˚C	-15~46		
		Heating		-15~24		
Clean filter				Natural Enzyme Filter x 1 Photocatalytic Washable Deodorizing Filter x 1		

The data are measured under the following conditions(ISO-T1). Cooling: Indoor temp. of 27˚CDB, 19˚CWB, and outdoor temp. of 35˚CDB. Heating: Indoor temp. of 20˚CDB, and outdoor temp. of 7˚CDB, 6˚CWB.
* Indicates the value in an anechoic chamber.During operation these values are somewhat higher due to ambient conditions.

Sophisticated Design

With classy semi flat front panel in chic white, the new series fit in various kinds of rooms and create relaxing atmosphere. Choice of wall hanging, floor standing or behind gallery installation is available.

Quiet Operation

Thanks to optimum balance of air outlet direction and sufficient air flow volume, the sound level has been minimized. The level of SRF25ZMX-S in the cooling lo mode is 26dB(A) only.

Auto air outlet selection

Heating operation:

In case both lower and upper outlets operation with Auto fan speed mode is selected, the lower outlet will be kept for twenty minutes after the start or until room temperature is close to reaching the setting point. And then the air outlet will change to both outlets. That state will be maintained until the switch is turned off.
Automatic adjustment of lower air outlet direction prevents stirring up of warm air and keeps optimum comfort at floor level.

Cooling operation:

In case both lower and upper outlets operation is selected in Cooling or Dry operation, both outlets will be kept for sixty minutes after the start or until room temperature is below the setting point. And then the air outlet will change to the upper outlet. That state will be maintained until switch is turned off.
In case both outlets operation with Auto fan speed mode is selected, the upper outlet will be kept for ten minutes after the start or until room temperature is close to reaching the setting point. And then the air outlet will change to both outlets in order to spread comfort air to every corner.

Flap control system

Selection of position is possible. A flap can be set at different angles.

∗RCH-E3 is not applicable to the Flap control system.

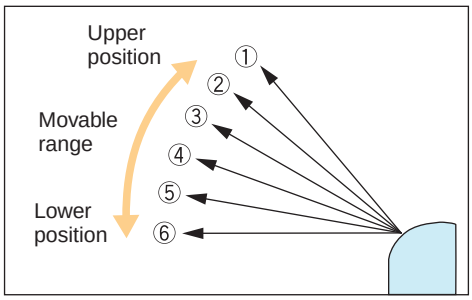

Installation workability

Piping and drain hose connection can be selected out of 6-directions.

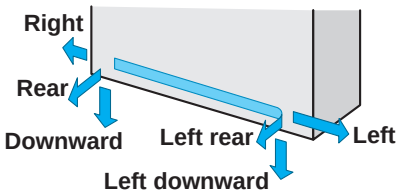

Convenient to use operation

Besides on/off operation, simultaneous lower and upper air outlets or upper outlet can be selected by air flow direction button. Further control can be arranged by a remote control.

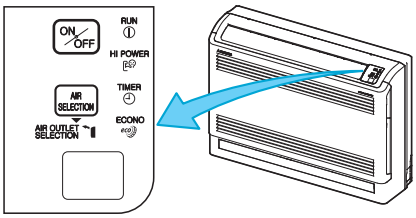

INVERTER HEAT PUMP MODEL

SRR-ZM

Ceiling Concealed type

R410A

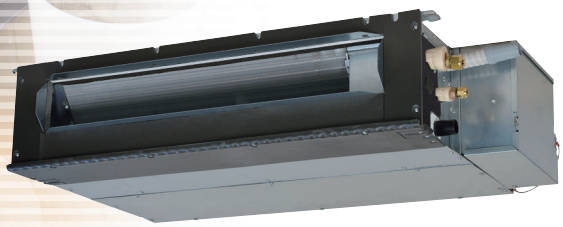

SRR25ZM-S, SRR35ZM-S

Standard equipment

Single Multi

SRR25/35ZM can be selected for use as indoor units in the combination with SCM Multi system outdoor unit.

SRC25ZMX-S, SRC35ZMX-S

Thin design

Height : 230→ 200mm

Current Model　　New Model

OPTION

Item	Contents	Option No.
Bottom air inlet kit	①+②	UT-BAT1EF

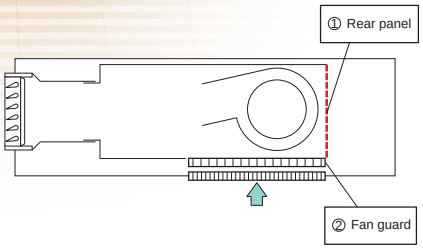

Refrigerant pipe length

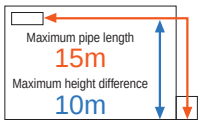

SRR25ZM-S
SRR35ZM-S

FUNCTION

Comfortable Functions: Self Clean Operation, Fuzzy, Auto, HI POWER

Convenient & Economy Functions: On Weekly timer Off, On Timer, OFF Timer, DRY, Economy, Sleep, Silent, Night setback 10°C

Maintenance & Prevention Functions: MC, Self Diagnostic

Others: Back-up Switch, Auto Restart, Luminous

SPECIFICATIONS

				SRR25ZM-S	SRR35ZM-S
Indoor unit					
Outdoor unit				SRC25ZMX-S	SRC35ZMX-S
Power source				1 Phase, 220 - 240V, 50Hz	
Nominal cooling capacity (Min~Max)			kW	2.5 (1.0 ~ 3.3)	3.5 (1.0 ~ 3.9)
Nominal heating capacity (Min~Max)			kW	3.4 (1.4 ~ 4.8)	4.2 (1.5 ~ 5.2)
Power consumption		Cooling/Heating	kW	0.570 / 0.750	0.980 / 1.030
EER/COP		Cooling/Heating		4.39 / 4.53	3.57 / 4.08
Inrush current		220/230/240 V	A	3.9 / 3.7 / 3.6	5.0 / 4.8 / 4.6
Max. running current				8	8
*Sound power level	Indoor	Cooling/Heating	dB(A)	56 / 59	57 / 60
	Outdoor	Cooling/Heating		60 / 60	62 / 62
*Sound pressure level	Indoor	Cooling (Hi/Me/Lo/Ulo)		37 / 33 / 30 / 24	38 / 34 / 31 / 25
		Heating (Hi/Me/Lo/Ulo)		40 / 37 / 34 / 28	41 / 38 / 35 / 29
	Outdoor	Cooling/Heating		47 / 47	50 / 50
Air flow	Indoor	Cooling (Hi/Me/Lo/Ulo)	m^3/min	9.5 / 8.0 / 6.5 / 4.5	10.0 / 8.5 / 7.0 / 5.0
		Heating (Hi/Me/Lo/Ulo)		10.0 / 9.0 / 8.0 / 6.0	10.5 / 9.5 / 8.5 / 6.5
	Outdoor	Cooling/Heating		29.5 / 27.0	32.5 / 29.5
Exterior dimensions	Indoor	HeightxWidthxDepth	mm	200 x 750 x 500	
	Outdoor			595 x 780(+62) x 290	
Net weight	Indoor / Outdoor		kg	20.5 / 35	
Ref.piping size	Liquid/Gas		ø mm	6.35(1/4") / 9.52(3/8")	
Refrigerant line (one way) length			m	Max. 15	
Vertical height differences		Outdoor is higher/lower	m	Max. 10 / Max.10	
Outdoor operating temperature range		Cooling	˚C	-15~46	
		Heating		-15~21	
Air filter				Standard equipment	

The data are measured under the following conditions(ISO-T1). Cooling: Indoor temp. of 27˚CDB, 19˚CWB, and outdoor temp. of 35˚CDB. Heating: Indoor temp. of 20˚CDB, and outdoor temp. of 7˚CDB, 6˚CWB.
* Indicates the value in an anechoic chamber.During operation these values are somewhat higher due to ambient conditions.

FDTC-VF

4way Ceiling Cassette type

R410A

Fits into standard 600 x 600 ceiling

FDTC25VF, FDTC35VF, FDTC40VF, FDTC50VF, FDTC60VF

Individual flap control system

According to room temperature conditions, four directions of air flow can be controlled by individual flap as preferred. Individual flap control is available even after installation.

Flap control system

Selection of flap position is possible. Individual flaps can be set at different angles.

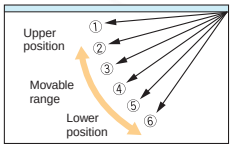

600mm Drain Pump is mounted

Drain can be discharged upward by 600mm from the ceiling surface close to the indoor unit. It allows a piping layout with a high degree of freedom depending on the installation location.

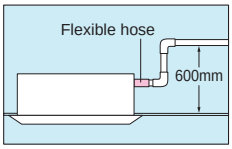

Single Multi

All FDTC-VF series (except FDTC40VF) can be selected for use as indoor units in the combination with SCM Multi system outdoor unit.

Wired remote control (option)

RC-EX1A RC-E5 RCH-E3

Wireless remote control (option)

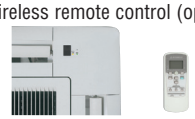

RCN-TC-24W-ER

SRC25ZMX-S, SRC35ZMX-S

SRC40ZMX-S, SRC50ZMX-S, SRC60ZMX-S

Refrigerant pipe length

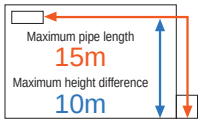

FDTC25VF, FDTC35VF

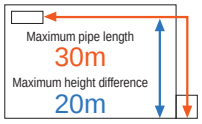

FDTC40VF, FDTC50VF FDTC60VF

FUNCTION

Comfortable Functions: Fuzzy, Auto

Comfortable Air Flow Functions: Auto Flap, Memory, UP/DOWN

Convenient & Economy Functions: On 24h Timer Off, On Timer, OFF Timer, DRY, Sleep

Maintenance & Prevention Functions: MC, Self Diagnostic

Others: Back-up Switch, Auto Restart

SPECIFICATIONS

Indoor unit				FDTC25VF	FDTC35VF	FDTC40VF	FDTC50VF	FDTC60VF
Outdoor unit				SRC25ZMX-S	SRC35ZMX-S	SRC40ZMX-S	SRC50ZMX-S	SRC60ZMX-S
Power source				1 Phase, 220 - 240V, 50Hz				
Nominal cooling capacity (Min~Max)			kW	2.55 (0.9 ~ 3.2)	3.6 (0.9 ~ 4.1)	4.0 (1.1 ~ 4.7)	5.0 (1.1 ~ 5.6)	5.6 (1.1 ~ 6.3)
Nominal heating capacity (Min~Max)			kW	3.45 (0.9 ~ 4.7)	4.25 (0.9 ~ 5.1)	4.5 (0.6 ~ 5.4)	5.4 (0.6 ~ 6.3)	6.7 (0.6 ~ 6.7)
Power consumption		Cooling/Heating	kW	0.6 / 0.84	1.07 / 1.16	1.04 / 1.10	1.56 / 1.45	1.99 / 2.07
EER/COP		Cooling/Heating		4.25 / 4.11	3.36 / 3.66	3.85 / 4.09	3.21 / 3.72	2.81 / 3.24
Inrush current		220/230/240 V	A	4.1 / 4.0 / 3.8	5.3 / 5.1 / 4.9	5.0	5.0	5.0
Max. running current				9	9	12	14	14
*Sound power level	Indoor	Cooling/Heating	dB(A)	56	58	60	60	60
	Outdoor	Cooling/Heating		56	58	63	63	64
*Sound pressure level	Indoor	Cooling (Hi/Me/Lo)		36 / 32 / 29	40 / 36 / 30	42 / 36 / 30	42 / 36 / 30	46 / 39 / 30
		Heating (Hi/Me/Lo)		38 / 33 / 29.5	42 / 35 / 32	42 / 36 / 32	42 / 36 / 32	46 / 39 / 32
	Outdoor	Cooling/Heating		47 / 47	50 / 50	50 / 50	54 / 50	54 / 54
Air flow	Indoor	Cooling (Hi/Me/Lo)	m^3/min	9 / 8 / 6.5	9.5 / 9 / 7	11.5 / 9 / 7	11.5 / 9 / 7	13.5 / 10 / 7
		Heating (Hi/Me/Lo)		9.5 / 8.5 / 7	10 / 9 / 8	11.5 / 9 / 8	11.5 / 9 / 8	13.5 / 10 / 8
	Outdoor	Cooling/Heating		29.5 / 27.0	32.5 / 29.5	36 / 33	40 / 33	41.5 / 39
Exterior dimensions	Indoor	HeightxWidthxDepth	mm	Unit : 248 x 570 x 570 Panel : 35 x 700 x 700				
	Outdoor			595 x 780(+62) x 290		640 x 800(+71) x 290		
Net weight	Indoor / Outdoor		kg	18.5 (Unit : 15 Panel : 3.5) / 35		18.5 (Unit : 15 Panel : 3.5) / 45		
Ref.piping size	Liquid/Gas		Ømm	6.35(1/4") / 9.52(3/8")		6.35(1/4") / 12.7(1/2")		
Refrigerant line (one way) length			m	Max. 15		Max. 30		
Vertical height differences		Outdoor is higher/lower	m	Max. 10 / Max.10		Max. 20 / Max.20		
Outdoor operating temperature range		Cooling	˚C	-15~46				
		Heating		-15~21				
Clean filter				TC-PSA-25W-E				

The data are measured under the following conditions(ISO-T1). Cooling: Indoor temp. of 27˚CDB, 19˚CWB, and outdoor temp. of 35˚CDB. Heating: Indoor temp. of 20˚CDB, and outdoor temp. of 7˚CDB, 6˚CWB.
* Indicates the value in an anechoic chamber.During operation these values are somewhat higher due to ambient conditions.
※ Powerful-Hi can be selected. Sound level dB(A):25VF(Cooling:38 Heating:39), 35VF(Cooling:41 Heating:43), 40/50/60VF(Cooling:47 Heating:47), Airflow m^3/min:25VF(Cooling:10 Heating:10.5), 35VF(Cooling:11 Heating:11.5), 40/50/60VF(Cooling:13.5 Heating:13.5)

Inverter Multi-split System

R410A

The multi-split system allows a single outdoor unit to service a range of configurations of up to six indoor unit ---- from a lineup of 8 units ranging from 6.0kW to 19.5kW.

ZMX, ZR, ZM

Wall Mounted type **SRK**

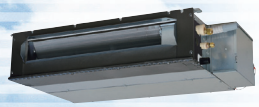

Ceiling Concealed type **SRR**

4way Ceiling Cassette type **FDTC**

Fits into standard 600 x 600 ceiling

Floor Standing type **SRF**

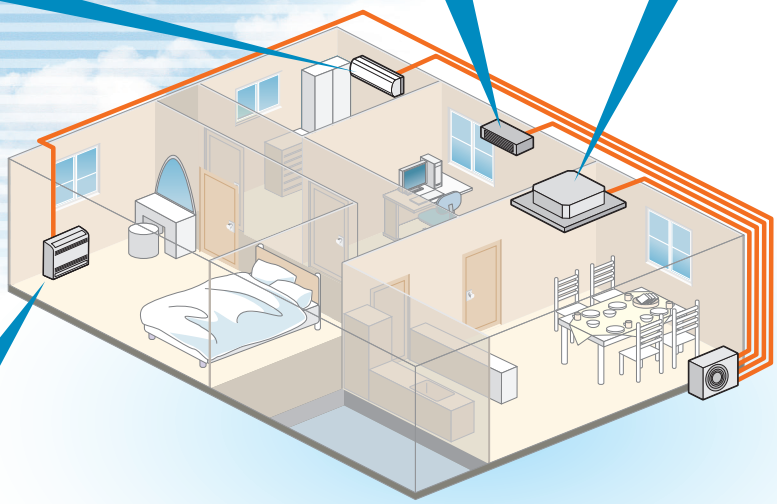

Ceiling Suspended type **FDE**

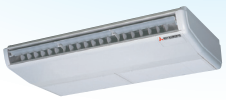

Duct Connected type **FDUM**

OUTDOOR UNIT

SCM40ZM-S, SCM45ZM-S
SCM50ZM-S, SCM60ZM-S

SCM71ZM-S, SCM80ZM-S

SCM100ZM-S, SCM125ZM-S

The industry' s highest SEER/SCOP levels

Our new models, SCM40~125ZM-S have achieved the highest level of SEER/SCOP in the industry with full model change to both of outdoor and indoor (SRK series) units.
Outdoor unit uses new advanced compressors with new inverter control (Vector control) and new M shape fin.
Indoor units SRK series are the latest series, which are common to both of single and multi system, using the new heat exchanger and improved air flow system.

SEER in Cooling

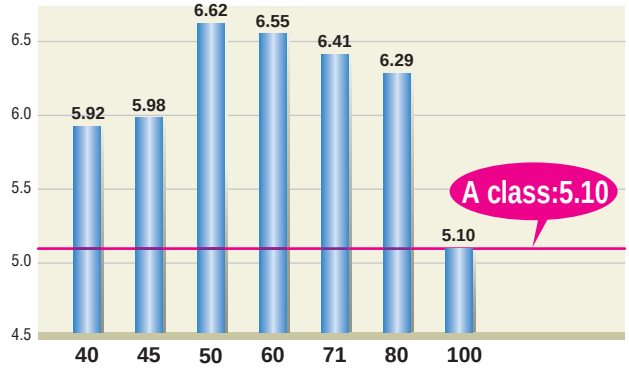

SCOP in Heating

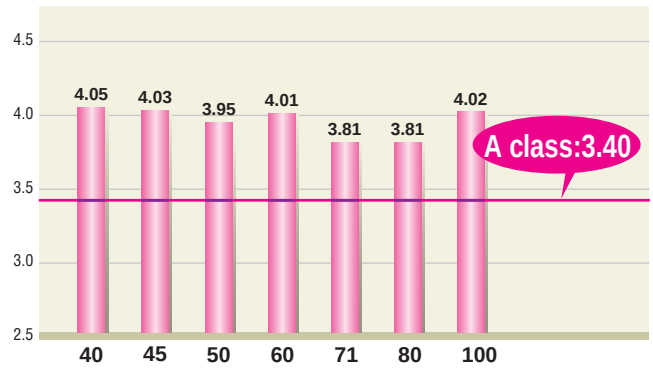

The above values are based on indoor unit combination with SRK-ZMX-S only. Please refer to page 62 for the details.

PIPING LENGTH

Limit The maximum piping length of the refrigerant pipes for the outdoor units, and the maximum height difference for the outdoor units are as shown below.

		SCM40/45ZM-S	SCM50/60ZM-S	SCM71/80ZM-S	SCM100/125ZM-S
	length for one indoor unit	under 25m	under 25m	under 25m	under 25m
	total length for all rooms	under 30m	under 40m	under 70m	under 90m
height difference	lower installation spot of the indoor unit (A)	under 15m	under 15m	under 20m	under 20m
	upper installation spot of the indoor unit (B)	under 15m	under 15m	under 20m	under 20m
	maximum height difference of the indoor units (C)	under 25m	under 25m	under 25m	under 25m
	length of precharged refrigerant pipe	30m	40m	40m	50m

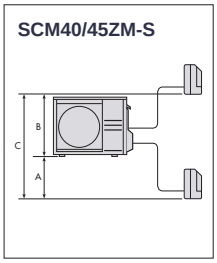

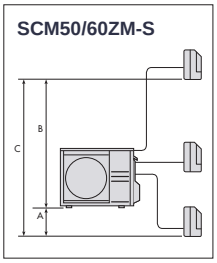

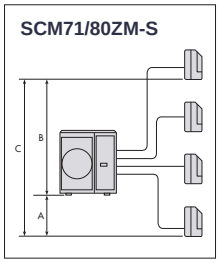

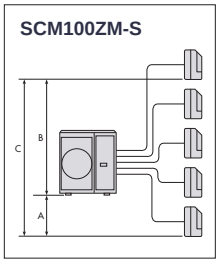

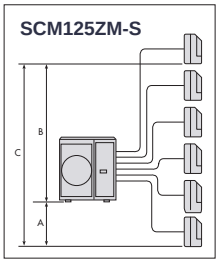

SPECIFICATIONS

Item \ Model			For two rooms		For three rooms		For four rooms		For five rooms	For six rooms
			SCM40ZM-S	SCM45ZM-S	SCM50ZM-S	SCM60ZM-S	SCM71ZM-S	SCM80ZM-S	SCM100ZM-S	SCM125ZM-S
Power Source			1Phase, 220 - 240V, 50Hz							
Nominal cooling capacity (Min~Max)		kW	4.0(1.8~5.9)	4.5(1.8~6.4)	5.0(1.8~7.1)	6.0(1.8~7.5)	7.1(1.8~8.8)	8.0(1.8~9.2)	10.0(1.8~12.0)	12.5(1.8~14.0)
Nominal heating capacity (Min~Max)		kW	4.5(1.4~6.9)	5.6(1.4~7.4)	6.0(1.4~7.5)	6.8(1.5~7.8)	8.6(1.5~9.4)	9.3(1.5~9.8)	12.0(1.5~13.5)	13.5(1.5~14.0)
Power Consumption	Cooling	kW	0.84(0.49~1.90)	1.04(0.49~2.14)	1.08(0.50~2.15)	1.43(0.50~2.39)	1.74(0.48~2.75)	2.16(0.48~2.83)	2.86(0.65~4.03)	3.90(0.65~4.80)
	Heating	kW	0.90(0.47~2.30)	1.20(0.47~2.57)	1.31(0.48~2.58)	1.51(0.60~3.00)	2.00(0.60~3.35)	2.26(0.60~3.43)	2.93(0.70~3.40)	3.25(0.70~3.42)
EER	Cooling		4.76	4.33	4.63	4.2	4.08	3.70	3.50	3.21
COP	Heating		5.00	4.67	4.58	4.5	4.30	4.12	4.10	4.15
Inrush current (Max)		A	4.1/4.0/3.8(14)	5.5/5.3/5.1(14)	6.0/5.8/5.5(15)	7.1/6.8/6.6(17)	9.2/8.8/8.4(20)	10.4/10.0/9.5(20)	13.3/12.8/12.2(29)	17.7/17.0/16.3(29)
Sound power level *	Cooling	dB(A)	60	60	62	63	65	66	68	69
	Heating	dB(A)	62	62	65	65	66	66	71	72
Sound pressure level *	Cooling	dB(A)	47	47	49	50	52	54	56	57
	Heating	dB(A)	48	49	52	52	54	54	59	60
Air flow	Cooling	m^3/min	40.0	40.0	41.0	42.0	56.0	56.0	75.0	75.0
	Heating	m^3/min	40.0	40.0	41.0	42.0	56.0	56.0	75.0	82.0
Exterior dimensions (HXWXD)		mm	640X850(+65)X290				750X880(+73)X340		945X970(+73)X370	
Net weight		kg	47	47	48	49	62		92	
Outdoor operating temperature range		˚C	-15~43							
			-15~24							
Total indoor units capacity		kW	6.0	7.0	8.5	11.0	12.5	13.5	16.0	19.5

The data are measured under the following conditions(ISO-T1). Cooling: Indoor temp. of 27˚CDB, 19˚CWB, and outdoor temp. of 35˚CDB. Heating: Indoor temp. of 20˚CDB, and outdoor temp. of 7˚CDB, 6˚CWB.
* Indicates the value in an anechoic chamber.During operation these values are somewhat higher due to ambient conditions.

Multi System INDOOR UNIT

R410A

Diamond Series

SRK-ZMX

Wall Mounted type

Standard equipment

FUNCTION

Self Clean Operation | Allergen Filter | SUN Filter

Comfortable Functions: Fuzzy | Auto | HI POWER

Comfortable Air Flow Functions: 3D Auto | Auto Flap | Memory | UP/DOWN | Lateral Swing | Positioning of installation

Convenient & Economy Functions: On Weekly timer Off | On Timer | OFF Timer | DRY | Economy | Sleep | Night setback 10°C

Maintenance & Prevention Functions: MC | Self Diagnostic | Detachable

Others: Back-up Switch | Auto Restart | 24h ION | Luminous

SPECIFICATIONS

Item		Model	SRK20ZMX-S	SRK25ZMX-S	SRK35ZMX-S	SRK50ZMX-S	SRK60ZMX-S
Nominal cooling capacity		kW	2.0	2.5	3.5	5.0	6.0
Nominal heating capacity		kW	3.0	3.4	4.5	5.8	6.8
⋆Sound power level	Cooling	dB(A)	53	55	58	60	64
	Heating	dB(A)	54	58	59	64	64
⋆Sound pressure level	Cooling(Hi/Me/Lo)	dB(A)	39 / 30 / 21	41 / 31 / 22	43 / 33 / 22	47 / 40 / 27	51 / 41 / 29
	Heating(Hi/Me/Lo)	dB(A)	38 / 33 / 25	41 / 34 / 27	42 / 35 / 27	48 / 40 / 33	48 / 41 / 34
Air flow	Cooling(Hi/Me/Lo)	m^3/min	11.5 / 8.0 / 5.0	12.5 / 9.0 / 5.0	13.5 / 9.5 / 5.0	13.5 / 11.0 / 8.0	14.5 / 12.5 / 8.5
	Heating(Hi/Me/Lo)		12.0 / 9.5 / 7.0	13.0 / 10.0 / 7.5	14.0 / 11.0 / 8.0	17.0 / 14.5 / 10.5	17.5 / 15.0 / 11.0
Exterior dimensions (H×W×D)		mm	309×890×220				
Net weight		kg	13.5				
Ref. piping size	Liquid / Gas	ϕ mm	6.35 (1/4") / 9.52 (3/8")			6.35(1/4") / 12.7(1/2")	
Clean filter			Allergen Clear Filter × 1, Photocatalytic Washable Deodorizing Filter × 1				

The data are measured under the following conditions(ISO-T1). Cooling: Indoor temp. of 27°CDB, 19°CWB, and outdoor temp. of 35°CDB. Heating: Indoor temp. of 20°CDB, and outdoor temp. of 7°CDB, 6°CWB.
⋆ Indicates the value in an anechoic chamber.During operation these values are somewhat higher due to ambient conditions.

Diamond Series

SRK-ZR

Wall Mounted type

Standard equipment

FUNCTION

Self Clean Operation | Allergen Filter | SUN Filter

Comfortable Functions: Fuzzy | Auto | HI POWER

Comfortable Air Flow Functions: 3D Auto | Auto Flap | Memory | UP/DOWN | Lateral Swing | Positioning of installation

Convenient & Economy Functions: On Weekly timer Off | On Timer | OFF Timer | DRY | Economy | Sleep | Night setback 10°C

Maintenance & Prevention Functions: MC | Self Diagnostic | Detachable

Others: Back-up Switch | Auto Restart | 24h ION | Luminous

SPECIFICATIONS

Item		Model	SRK71ZR-S
Nominal cooling capacity		kW	7.1
Nominal heating capacity		kW	8.0
⋆Sound power level	Cooling	dB(A)	58
	Heating	dB(A)	60
⋆Sound pressure level	Cooling(Hi/Me/Lo/Ulo)	dB(A)	44 / 41 / 37 / 25
	Heating(Hi/Me/Lo/Ulo)	dB(A)	46 / 39 / 35 / 28
Air flow	Cooling(Hi/Me/Lo/Ulo)	m^3/min	20.5 / 18.6 / 16.2 / 10.4
	Heating(Hi/Me/Lo/Ulo)		25.5 / 19.8 / 17.3 / 13.3
Exterior dimensions (H×W×D)		mm	339×1197×262
Net weight		kg	15.5
Ref. piping size	Liquid / Gas	ϕ mm	6.35(1/4") / 15.88(5/8")
Clean filter			Allergen Clear Filter × 1, Photocatalytic Washable Deodorizing Filter × 1

The data are measured under the following conditions(ISO-T1). Cooling: Indoor temp. of 27°CDB, 19°CWB, and outdoor temp. of 35°CDB. Heating: Indoor temp. of 20°CDB, and outdoor temp. of 7°CDB, 6°CWB.
⋆ Indicates the value in an anechoic chamber.During operation these values are somewhat higher due to ambient conditions.

Premium Series

SRK-ZM

Wall Mounted type

Standard equipment

FUNCTION

Comfortable Functions

Comfortable Air Flow Functions

Convenient & Economy Functions

Maintenance & Prevention Functions

Others

SPECIFICATIONS

Item		Model	SRK20ZM-S	SRK25ZM-S	SRK35ZM-S	SRK50ZM-S
Nominal cooling capacity		kW	2.0	2.5	3.5	5.0
Nominal heating capacity		kW	3.0	3.4	4.5	5.8
⁎Sound power level	Cooling	dB(A)	49	50	58	60
	Heating	dB(A)	52	55	59	61
⁎Sound pressure level	Cooling(Hi/Me/Lo)	dB(A)	33 / 27 / 21	34 / 28 / 21	42 / 32 / 22	46 / 37 / 26
	Heating(Hi/Me/Lo)	dB(A)	36 / 31 / 24	39 / 31 / 24	43 / 37 / 25	45 / 37 / 31
Air flow	Cooling(Hi/Me/Lo)	m^3/min	7.8 / 5.6 / 4.8	7.9 / 6.0 / 5.0	10.1 / 6.4 / 5.0	11.3 / 7.8 / 5.3
	Heating(Hi/Me/Lo)	m^3/min	9.8 / 6.3 / 5.0	10.6 / 6.5 / 5.1	12.8 / 9.4 / 6.1	13.5 / 10.2 / 7.5
Exterior dimensions (H×W×D)		mm	294×798×229			
Net weight		kg	9.5			
Ref. piping size	Liquid / Gas	ϕ mm	6.35(1/4") / 9.52(3/8")			6.35(1/4") / 12.7(1/2")
Clean filter			Allergen Clear Filter × 1, Photocatalytic Washable Deodorizing Filter × 1			

The data are measured under the following conditions(ISO-T1). Cooling: Indoor temp. of 27˚CDB, 19˚CWB, and outdoor temp. of 35˚CDB. Heating: Indoor temp. of 20˚CDB, and outdoor temp. of 7˚CDB, 6˚CWB.
⁎ Indicates the value in an anechoic chamber.During operation these values are somewhat higher due to ambient conditions.

SRF-ZMX

Floor Standing type

Standard equipment

FUNCTION

Comfortable Functions

Comfortable Air Flow Functions

Convenient & Economy Functions

Maintenance & Prevention Functions

Others

SPECIFICATIONS

Item		Model	SRF25ZMX-S	SRF35ZMX-S	SRF50ZMX-S
Nominal cooling capacity		kW	2.5	3.5	5.0
Nominal heating capacity		kW	3.4	4.5	5.8
⁎Sound power level	Cooling	dB(A)	51	52	58
	Heating	dB(A)	51	52	58
⁎Sound pressure level	Cooling(Hi/Me/Lo/Ulo)	dB(A)	40 / 32 / 29 / 26	41 / 34 / 32 / 28	46 / 42 / 35 / 32
	Heating(Hi/Me/Lo/Ulo)	dB(A)	40 / 35 / 33 / 28	41 / 36 / 35 / 31	47 / 41 / 39 / 33
Air flow	Cooling(Hi/Me/Lo/Ulo)	m^3/min	9.0 / 7.6 / 6.7 / 5.8	9.2 / 7.8 / 7.3 / 6.4	11.5 / 9.6 / 7.4 / 6.6
	Heating(Hi/Me/Lo/Ulo)	m^3/min	10.5 / 8.2 / 7.7 / 6.6	10.7 / 8.3 / 8.1 / 7.4	12.0 / 10.0 / 9.4 / 7.6
Exterior dimensions (H×W×D)		mm	600×860×238		
Net weight		kg	18	19	
Ref. piping size	Liquid / Gas	ϕ mm	6.35(1/4") / 9.52(3/8")		6.35(1/4") / 12.7(1/2")
Clean filter			Natural Enzyme Filter × 1 Photocatalytic Washable Deodorizing Filter × 1		

The data are measured under the following conditions(ISO-T1). Cooling: Indoor temp. of 27˚CDB, 19˚CWB, and outdoor temp. of 35˚CDB. Heating: Indoor temp. of 20˚CDB, and outdoor temp. of 7˚CDB, 6˚CWB.
⁎ Indicates the value in an anechoic chamber.During operation these values are somewhat higher due to ambient conditions.

SRR-ZM

Ceiling Concealed type

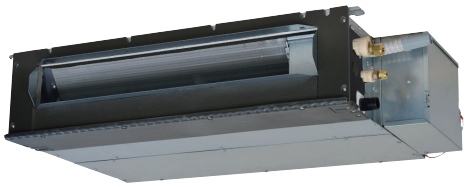

OPTION

Item	Contents	Option No.
Bottom air inlet kit	①+②	UT-BAT1EF

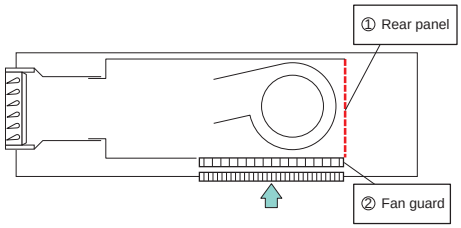

Wired remote control (option)

RC-EX1A RC-E5

Wireless remote control

Standard equipment

FUNCTION

Comfortable Functions

Convenient & Economy Functions

Maintenance & Prevention Functions

Others

SPECIFICATIONS

Item		Model	SRR25ZM-S	SRR35ZM-S	SRR50ZM-S	SRR60ZM-S
Nominal cooling capacity		kW	2.5	3.5	5.0	6.0
Nominal heating capacity		kW	3.4	4.5	5.8	6.8
⋆Sound power level	Cooling	dB(A)	56	57	59	60
	Heating	dB(A)	59	60	61	63
⋆Sound pressure level	Cooling(Hi/Me/Lo/Ulo)	dB(A)	37 / 33 / 30 / 24	38 / 34 / 31 / 25	41 / 37 / 34 / 29	44 / 38 / 35 / 30
	Heating(Hi/Me/Lo/Ulo)	dB(A)	40 / 37 / 34 / 28	41 / 38 / 35 / 29	43 / 39 / 37 / 32	45 / 41 / 38 / 33
Air flow	Cooling(Hi/Me/Lo/Ulo)	m^3/min	9.5 / 8.5 / 6.5 / 4.5	10.0 / 8.5 / 7.0 / 5.0	13.5 / 11.0 / 10.0 / 7.5	14.5 / 11.5 / 10.5 / 8.0
	Heating(Hi/Me/Lo/Ulo)		10.0 / 9.0 / 8.0 / 6.0	10.5 / 9.5 / 8.5 / 6.5	14.5 / 12.5 / 11.0 / 8.5	15.0 / 13.0 / 11.5 / 9.0
Exterior dimensions(HXWXD)		mm	200X750X500		200X950X500	
Net weight		kg	20.5		24	
Ref. piping size	Liquid / Gas	ϕmm	6.35(1/4") / 9.52(3/8")		6.35(1/4") / 12.7(1/2")	
Air filter			Standard equipment			

The data are measured under the following conditions(ISO-T1). Cooling: Indoor temp. of 27˚CDB, 19˚CWB, and outdoor temp. of 35˚CDB. Heating: Indoor temp. of 20˚CDB, and outdoor temp. of 7˚CDB, 6˚CWB.
⋆ Indicates the value in an anechoic chamber.During operation these values are somewhat higher due to ambient conditions.

FDTC-VF

4way Ceiling Cassette type

Fits into standard 600 x 600 ceiling

Wired remote control (option)

RC-EX1A RC-E5 RCH-E3

Wireless remote control (option)

RCN-TC-24W-ER

FUNCTION

Comfortable Functions

Comfortable Air Flow Functions

Convenient & Economy Functions

Maintenance & Prevention Functions

Others

SPECIFICATIONS

Item		Model	FDTC25VF	FDTC35VF	FDTC50VF	FDTC60VF
Nominal cooling capacity		kW	2.5	3.5	5.0	6.0
Nominal heating capacity		kW	3.4	4.5	5.8	6.8
⋆Sound power level	Cooling	dB(A)	56	58	60	60
	Heating	dB(A)	56	58	60	60
⋆Sound pressure level ※	Cooling(Hi/Me/Lo)	dB(A)	36 / 32 / 29	40 / 36 / 30	42 / 36 / 30	46 / 39 / 30
	Heating(Hi/Me/Lo)	dB(A)	38 / 33 / 29.5	42 / 35 / 32	42 / 36 / 32	46 / 39 / 32
Air flow ※	Cooling(Hi/Me/Lo)	m^3/min	9.0 / 8.0 / 6.5	9.5 / 9.0 / 7.0	11.5 / 9.0 / 7.0	13.5 / 10.0 / 7.0
	Heating(Hi/Me/Lo)		9.5 / 8.5 / 7.0	10.0 / 9.0 / 8.0	11.5 / 9.0 / 8.0	13.5 / 10.0 / 8.0
Exterior dimensions (HXWXD)	Main unit	mm	248X570X570			
	Panel	mm	35X700X700			
Net weight	Unit	kg	15			
	Panel	kg	3.5			
Ref. piping size	Liquid / Gas	ϕmm	6.35(1/4") / 9.52(3/8")		6.35(1/4") / 12.7(1/2")	

The data are measured under the following conditions(ISO-T1). Cooling: Indoor temp. of 27˚CDB, 19˚CWB, and outdoor temp. of 35˚CDB. Heating: Indoor temp. of 20˚CDB, and outdoor temp. of 7˚CDB, 6˚CWB.
⋆ Indicates the value in an anechoic chamber.During operation these values are somewhat higher due to ambient conditions.
※ Powerful-Hi can be selected. Sound level dB(A):25VF(Cooling:38 Heating:39), 35VF(Cooling:41 Heating:43), 40/50/60VF(Cooling:47 Heating:47), Air flow m^3/min:25VF(Cooling:10 Heating:10.5), 35VF(Cooling:11 Heating:11.5), 50/60VF(Cooling:13.5 Heating:13.5)

FDUM-VF

Duct Connected-Low/Middle Static Pressure-

Wired remote control (option)

RC-EX1A

RC-E5

RCH-E3

Wireless remote control (option)

RCN-KIT3-E

Filter KIT
UM-FL1EF (option)

FUNCTION

Comfortable Functions

Convenient & Economy Functions

Maintenance & Prevention Functions

Others

SPECIFICATIONS

Item		Model	FDUM50VF
Nominal cooling capacity		kW	5.0
Nominal heating capacity		kW	5.8
⁎Sound power level	Cooling	dB(A)	60
	Heating	dB(A)	60
⁎Sound pressure level ※	Cooling(Hi/Me/Lo)	dB(A)	32 / 29 / 26
	Heating(Hi/Me/Lo)	dB(A)	32 / 29 / 26
Air flow ※	Cooling(Hi/Me/Lo)	m^3/min	10.0 / 9.0 / 8.0
	Heating(Hi/Me/Lo)		10.0 / 9.0 / 8.0
Exterior dimensions (HXWXD)		mm	280X750X635
Net weight		kg	29
Ref. piping size	Liquid / Gas	ϕmm	6.35(1/4") / 12.7(1/2")
Air filter			Filter KIT : UM-FL1EF (option)

The data are measured under the following conditions(ISO-T1). Cooling: Indoor temp. of 27˚CDB, 19˚CWB, and outdoor temp. of 35˚CDB. Heating: Indoor temp. of 20˚CDB, and outdoor temp. of 7˚CDB, 6˚CWB.
⁎ Indicates the value in an anechoic chamber.During operation these values are somewhat higher due to ambient conditions.
※ Powerful-Hi can be selected. Sound pressure level dB(A):Cooling:37 Heating:37, Air flow:13m^3/min

FDE-VG

Ceiling Suspended

Wired remote control (option)

RC-EX1A

RC-E5

RCH-E3

Wireless remote control (option)

RCN-E-E

FUNCTION

Comfortable Functions

Comfortable Air Flow Functions

Convenient & Economy Functions

Maintenance & Prevention Functions

Others

SPECIFICATIONS

Item		Model	FDE50VG
Nominal cooling capacity		kW	5.0
Nominal heating capacity		kW	5.8
⁎Sound power level	Cooling	dB(A)	60
	Heating	dB(A)	60
⁎Sound pressure level ※	Cooling(Hi/Me/Lo)	dB(A)	38/ 36/ 31
	Heating(Hi/Me/Lo)	dB(A)	38/ 36/ 31
Air flow ※	Cooling(Hi/Me/Lo)	m^3/min	10.0 / 9.0 / 7.0
	Heating(Hi/Me/Lo)		10.0 / 9.0 / 7.0
Exterior dimensions (HXWXD)		mm	210X1070X690
Net weight		kg	28
Ref. piping size	Liquid / Gas	ϕmm	6.35(1/4") / 12.7(1/2")
Air filter			Pocket Plastic net X 2 (Washable)

The data are measured under the following conditions(ISO-T1). Cooling: Indoor temp. of 27˚CDB, 19˚CWB, and outdoor temp. of 35˚CDB. Heating: Indoor temp. of 20˚CDB, and outdoor temp. of 7˚CDB, 6˚CWB.
⁎ Indicates the value in an anechoic chamber.During operation these values are somewhat higher due to ambient conditions.
※ Powerful-Hi can be selected. Sound pressure level:Cooling dB(A):46 Heating:46, Air flow:13m^3/min

Combinations

Combination table for Outdoor unit and Indoor unit ●:Yes –:No

Indoor \ Outdoor		40ZM-S	45ZM-S	50ZM-S	60ZM-S	71ZM-S	80ZM-S	100ZM-S	125ZM-S
SRK	20ZMX-S	●	●	●	●	●	●	●	●
	25ZMX-S	●	●	●	●	●	●	●	●
	35ZMX-S	●	●	●	●	●	●	●	●
	50ZMX-S	–	–	●	●	●	●	●	●
	60ZMX-S	–	–	–	●	●	●	●	●
	71ZR-S	–	–	–	–	–	–	●	●
	20ZM-S	●	●	●	●	●	●	●	●
	25ZM-S	●	●	●	●	●	●	●	●
	35ZM-S	●	●	●	●	●	●	●	●
	50ZM-S	–	–	●	●	●	●	●	●
SRR	25ZM-S	●	●	●	●	●	●	●	●
	35ZM-S	●	●	●	●	●	●	●	●
	50ZM-S	–	–	●	●	●	●	●	●
	60ZM-S	–	–	–	●	●	●	●	●
SRF	25ZMX-S	●	●	●	●	●	●	●	●
	35ZMX-S	●	●	●	●	●	●	●	●
	50ZMX-S	–	–	●	●	●	●	●	●
FDTC	25VF	●	●	●	●	●	●	●	●
	35VF	●	●	●	●	●	●	●	●
	50VF	–	–	●	●	●	●	●	●
	60VF	–	–	–	●	●	●	●	●
FDUM	50VF	–	–	●	●	●	●	●	●
FDE	50VG	–	–	●	●	●	●	●	●

Number of connectable Indoor units

	40ZM-S	45ZM-S	50ZM-S	60ZM-S	71ZM-S	80ZM-S	100ZM-S	125ZM-S
Min	2	2	2	2	2	2	4*	4*
Max	2	2	3	3	4	4	5	6

* In case of SRK71ZR-S+SRK71ZR-S, 2 Indoor units can be connectable.
In case of the combination with SRK20ZMX-S, SRK25ZMX-S, SRK35ZMX-S, SRK50ZMX-S, SRK60ZMX-S, SRK71ZR-S & FDE50VG, any 3 indoor units can be connectable.
The total connecting capacit0y of indoor units should be between 100 ~ 160.

Connectable total indoor units capacity

	40ZM-S	45ZM-S	50ZM-S	60ZM-S	71ZM-S	80ZM-S	100ZM-S	125ZM-S
kW	6.0	7.0	8.5	11.0	12.5	13.5	16.0	19.5

SCM40ZM-S Table of Indoor unit combination with SRK-ZMX-S type only

Indoor unit combination			Heating capacity (kW)					Power consumption (W)			Standard current (A)		
			Room heating capacity (kW)		Total capacity (kW)								
			A room	B room	Min.	Standard	Max.	Min.	Standard	Max.	220V	230V	240V
Heating operation	*1 1 room	20	3.0	–	1.4	3.0	3.7	470	750	1070	3.4	3.3	3.2
		25	3.4	–	1.4	3.4	4.2	470	920	1210	4.2	4.0	3.9
		35	4.5	–	1.4	4.5	5.0	470	1210	1450	5.6	5.3	5.1
	*2 2 room	20 + 20	2.25	2.25	2.0	4.5	6.9	530	900	2300	4.1	4.0	3.8
		20 + 25	2.49	3.11	2.0	5.6	6.9	530	1200	2300	5.5	5.3	5.1
		20 + 35	2.11	3.69	2.0	5.8	6.9	530	1290	2300	5.9	5.7	5.4
		25 + 25	2.90	2.90	2.0	5.8	6.9	530	1290	2300	5.9	5.7	5.4
		25 + 35	2.42	3.38	2.0	5.8	6.9	530	1290	2300	5.9	5.7	5.4

The values are for 1 indoor unit (*1) and 2 indoor units (*2) operation.
The same hereinafter.

Indoor unit combination			Cooling capacity (kW)					Power consumption (W)			Standard current (A)		
			Room cooling capacity (kW)		Total capacity (kW)								
			A room	B room	Min.	Standard	Max.	Min.	Standard	Max.	220V	230V	240V
Cooling operation	1 room	20	2.0	–	1.8	2.0	2.8	490	530	880	2.4	2.3	2.2
		25	2.5	–	1.8	2.5	3.4	490	670	1040	3.1	2.9	2.8
		35	3.5	–	1.8	3.5	3.9	490	970	1200	4.5	4.3	4.1
	2 room	20 + 20	2.00	2.00	3.0	4.0	5.7	560	840	1750	3.9	3.7	3.5
		20 + 25	2.00	2.50	3.0	4.5	5.9	560	1040	1900	4.8	4.6	4.4
		20 + 35	1.89	3.31	3.0	5.2	5.9	560	1430	1900	6.6	6.3	6.0
		25 + 25	2.50	2.50	3.0	5.0	5.9	560	1280	1900	5.9	5.6	5.4
		25 + 35	2.17	3.03	3.0	5.2	5.9	560	1430	1900	6.6	6.3	6.0

SCM40ZM-S Table of Indoor unit combination not with SRK-ZMX-S type only

Indoor unit combination			Heating capacity (kW)					Power consumption (W)			Standard current (A)		
			Room heating capacity (kW)		Total capacity (kW)								
			A room	B room	Min.	Standard	Max.	Min.	Standard	Max.	220V	230V	240V
Heating operation	1 room	20	3.0	–	1.4	3.0	3.5	470	900	1070	4.1	4.0	3.8
		25	3.4	–	1.4	3.4	4.0	470	1070	1210	4.9	4.7	4.5
		35	4.5	–	1.4	4.5	4.8	470	1340	1450	6.2	5.9	5.6
	2 room	20 + 20	2.25	2.25	2.0	4.5	6.7	530	930	2300	4.3	4.1	3.9
		20 + 25	2.49	3.11	2.0	5.6	6.7	530	1240	2300	5.7	5.4	5.2
		20 + 35	2.11	3.69	2.0	5.8	6.7	530	1330	2300	6.1	5.8	5.6
		25 + 25	2.90	2.90	2.0	5.8	6.7	530	1330	2300	6.1	5.8	5.6
		25 + 35	2.42	3.38	2.0	5.8	6.7	530	1330	2300	6.1	5.8	5.6

Indoor unit combination			Cooling capacity (kW)					Power consumption (W)			Standard current (A)		
			Room cooling capacity (kW)		Total capacity (kW)								
			A room	B room	Min.	Standard	Max.	Min.	Standard	Max.	220V	230V	240V
Cooling operation	1 room	20	2.0	–	1.8	2.0	2.7	490	560	880	2.6	2.5	2.4
		25	2.5	–	1.8	2.5	3.2	490	710	1040	3.3	3.1	3.0
		35	3.5	–	1.8	3.5	3.7	490	1030	1200	4.7	4.5	4.3
	2 room	20 + 20	2.00	2.00	3.0	4.0	5.6	560	880	1750	4.0	3.9	3.7
		20 + 25	2.00	2.50	3.0	4.5	5.8	560	1090	1900	5.0	4.8	4.6
		20 + 35	1.89	3.31	3.0	5.2	5.8	560	1500	1900	6.9	6.6	6.3
		25 + 25	2.50	2.50	3.0	5.0	5.8	560	1340	1900	6.2	5.9	5.6
		25 + 35	2.17	3.03	3.0	5.2	5.8	560	1500	1900	6.9	6.6	6.3

SCM45ZM-S Table of Indoor unit combination with SRK-ZMX-S type only

Indoor unit combination			Heating capacity (kW)					Power consumption (W)			Standard current (A)		
			Room heating capacity (kW)		Total capacity (kW)								
			A room	B room	Min.	Standard	Max.	Min.	Standard	Max.	220V	230V	240V
Heating operation	1 room	20	3.0	–	1.4	3.0	3.7	470	750	1070	3.4	3.3	3.2
		25	3.4	–	1.4	3.4	4.2	470	920	1210	4.2	4.0	3.9
		35	4.5	–	1.4	4.5	5.0	470	1210	1450	5.6	5.3	5.1
	2 room	20 + 20	2.25	2.25	2.0	4.5	7.4	530	900	2570	4.1	4.0	3.8
		20 + 25	2.49	3.11	2.0	5.6	7.4	530	1200	2570	5.5	5.3	5.1
		20 + 35	2.36	4.14	2.0	6.5	7.4	530	1500	2570	6.9	6.6	6.3
		25 + 25	3.25	3.25	2.0	6.5	7.4	530	1500	2570	6.9	6.6	6.3
		25 + 35	2.71	3.79	2.0	6.5	7.4	530	1500	2570	6.9	6.6	6.3
		35 + 35	3.25	3.25	2.0	6.5	7.4	530	1500	2570	6.9	6.6	6.3

Indoor unit combination			Cooling capacity (kW)					Power consumption (W)			Standard current (A)		
			Room cooling capacity (kW)		Total capacity (kW)								
			A room	B room	Min.	Standard	Max.	Min.	Standard	Max.	220V	230V	240V
Cooling operation	1 room	20	2.0	–	1.8	2.0	2.8	490	530	880	2.4	2.3	2.2
		25	2.5	–	1.8	2.5	3.4	490	670	1040	3.1	2.9	2.8
		35	3.5	–	1.8	3.5	3.9	490	970	1200	4.5	4.3	4.1
	2 room	20 + 20	2.00	2.00	3.0	4.0	5.7	560	840	1750	3.9	3.7	3.5
		20 + 25	2.00	2.50	3.0	4.5	5.9	560	1040	1900	4.8	4.6	4.4
		20 + 35	2.00	3.50	3.0	5.5	6.3	560	1490	2110	6.8	6.5	6.3
		25 + 25	2.50	2.50	3.0	5.0	6.2	560	1280	2050	5.9	5.6	5.4
		25 + 35	2.42	3.38	3.0	5.8	6.4	560	1740	2140	8.0	7.6	7.3
		35 + 35	2.90	2.90	3.0	5.8	6.4	560	1740	2140	8.0	7.6	7.3

SCM45ZM-S Table of Indoor unit combination not with SRK-ZMX-S type only

Indoor unit combination			Heating capacity (kW)					Power consumption (W)			Standard current (A)		
			Room heating capacity (kW)		Total capacity (kW)								
			A room	B room	Min.	Standard	Max.	Min.	Standard	Max.	220V	230V	240V
Heating operation	1 room	20	3.0	–	1.4	3.0	3.5	470	900	1070	4.1	4.0	3.8
		25	3.4	–	1.4	3.4	4.0	470	1070	1210	4.9	4.7	4.5
		35	4.5	–	1.4	4.5	4.8	470	1340	1450	6.2	5.9	5.6
	2 room	20 + 20	2.25	2.25	2.0	4.5	7.2	530	930	2570	4.3	4.1	3.9
		20 + 25	2.49	3.11	2.0	5.6	7.2	530	1240	2570	5.7	5.4	5.2
		20 + 35	2.36	4.14	2.0	6.5	7.2	530	1550	2570	7.1	6.8	6.5
		25 + 25	3.25	3.25	2.0	6.5	7.2	530	1550	2570	7.1	6.8	6.5
		25 + 35	2.71	3.79	2.0	6.5	7.2	530	1550	2570	7.1	6.8	6.5
		35 + 35	3.25	3.25	2.0	6.5	7.2	530	1550	2570	7.1	6.8	6.5

Indoor unit combination			Cooling capacity (kW)					Power consumption (W)			Standard current (A)		
			Room cooling capacity (kW)		Total capacity (kW)								
			A room	B room	Min.	Standard	Max.	Min.	Standard	Max.	220V	230V	240V
Cooling operation	1 room	20	2.0	–	1.8	2.0	2.7	490	560	880	2.6	2.5	2.4
		25	2.5	–	1.8	2.5	3.2	490	710	1040	3.3	3.1	3.0
		35	3.5	–	1.8	3.5	3.7	490	1030	1200	4.7	4.5	4.3
	2 room	20 + 20	2.00	2.00	3.0	4.0	5.6	560	880	1750	4.0	3.9	3.7
		20 + 25	2.00	2.50	3.0	4.5	5.8	560	1090	1900	5.0	4.8	4.6
		20 + 35	2.00	3.50	3.0	5.5	6.2	560	1560	2110	7.2	6.9	6.6
		25 + 25	2.50	2.50	3.0	5.0	6.1	560	1340	2050	6.2	5.9	5.6
		25 + 35	2.42	3.38	3.0	5.8	6.3	560	1820	2140	8.4	8.0	7.7
		35 + 35	2.90	2.90	3.0	5.8	6.3	560	1820	2140	8.4	8.0	7.7

SCM50ZM-S Table of Indoor unit combination with SRK-ZMX-S type only

Indoor unit combination			Heating capacity (kW)						Power consumption (W)			Standard current (A)		
			Room heating capacity (kW)			Total capacity (kW)								
			A room	B room	C room	Min.	Standard	Max.	Min.	Standard	Max.	220V	230V	240V
Heating operation	1 room	20	3.0	–	–	1.4	3.0	3.7	480	820	1100	3.8	3.6	3.5
		25	3.4	–	–	1.4	3.4	4.2	480	980	1240	4.5	4.3	4.1
		35	4.5	–	–	1.4	4.5	5.0	480	1280	1490	5.9	5.6	5.4
		50	5.8	–	–	1.4	5.8	6.2	480	1740	2260	8.0	7.6	7.3
	2 room	20 + 20	2.95	2.95	–	2.0	5.9	7.3	540	1480	2580	6.8	6.5	6.2
		20 + 25	2.67	3.33	–	2.0	6.0	7.3	540	1530	2580	7.0	6.7	6.4
		20 + 35	2.29	4.01	–	2.0	6.3	7.3	540	1620	2580	7.4	7.1	6.8
		20 + 50	1.89	4.71	–	2.0	6.6	7.3	540	1710	2580	7.9	7.5	7.2
		25 + 25	3.05	3.05	–	2.0	6.1	7.3	540	1560	2580	7.2	6.9	6.6
		25 + 35	2.67	3.73	–	2.0	6.4	7.3	540	1650	2580	7.6	7.2	6.9
		25 + 50	2.20	4.40	–	2.0	6.6	7.3	540	1710	2580	7.9	7.5	7.2
		35 + 35	3.30	3.30	–	2.0	6.6	7.3	540	1710	2580	7.9	7.5	7.2
		35 + 50	2.72	3.88	–	2.0	6.6	7.3	540	1710	2580	7.9	7.5	7.2
	3 room	20 + 20 + 20	2.00	2.00	2.00	3.0	6.0	7.5	600	1310	2580	6.0	5.8	5.5
		20 + 20 + 25	1.91	1.91	2.38	3.0	6.2	7.5	600	1400	2580	6.4	6.1	5.9
		20 + 20 + 35	1.76	1.76	3.08	3.0	6.6	7.5	600	1560	2580	7.2	6.9	6.6
		20 + 25 + 25	1.83	2.29	2.29	3.0	6.4	7.5	600	1470	2580	6.7	6.5	6.2
		20 + 25 + 35	1.70	2.13	2.98	3.0	6.8	7.5	600	1620	2580	7.4	7.1	6.8
		25 + 25 + 25	2.20	2.20	2.20	3.0	6.6	7.5	600	1560	2580	7.2	6.9	6.6
		25 + 25 + 35	2.06	2.06	2.88	3.0	7.0	7.5	600	1690	2580	7.8	7.4	7.1

	Indoor unit combination		Cooling capacity (kW)						Power consumption (W)			Standard current (A)		
			Room Cooling capacity (kW)			Total capacity (kW)			Min.	Standard	Max.	220V	230V	240V
			A room	B room	C room	Min.	Standard	Max.						
Cooling operation	1 room	20	2.0	—	—	1.8	2.0	2.8	500	550	900	2.5	2.4	2.3
		25	2.5	—	—	1.8	2.5	3.4	500	720	1070	3.3	3.2	3.0
		35	3.5	—	—	1.8	3.5	3.9	500	1080	1230	5.0	4.7	4.5
		50	5.0	—	—	1.8	5.0	5.5	500	1700	2000	7.8	7.5	7.2
	2 room	20 + 20	2.00	2.00	—	3.0	4.0	5.7	570	910	1800	4.2	4.0	3.8
		20 + 25	1.91	2.39	—	3.0	4.3	5.9	570	1070	1980	4.9	4.7	4.5
		20 + 35	1.82	3.19	—	3.0	5.0	6.2	570	1430	2070	6.6	6.3	6.0
		20 + 50	1.71	4.29	—	3.0	6.0	6.5	570	1960	2150	9.0	8.6	8.2
		25 + 25	2.35	2.35	—	3.0	4.7	6.2	570	1270	2070	5.8	5.6	5.3
		25 + 35	2.21	3.09	—	3.0	5.3	6.5	570	1600	2150	7.3	7.0	6.7
		25 + 50	2.00	4.00	—	3.0	6.0	6.5	570	1960	2150	9.0	8.6	8.2
		35 + 35	3.00	3.00	—	3.0	6.0	6.5	570	1960	2150	9.0	8.6	8.2
		35 + 50	2.47	3.53	—	3.0	6.0	6.5	570	1960	2150	9.0	8.6	8.2
	3 room	20 + 20 + 20	1.67	1.67	1.67	3.4	5.0	7.1	690	1080	2150	5.0	4.7	4.5
		20 + 20 + 25	1.60	1.60	2.00	3.4	5.2	7.1	690	1160	2150	5.3	5.1	4.9
		20 + 20 + 35	1.49	1.49	2.61	3.4	5.6	7.1	690	1330	2150	6.1	5.8	5.6
		20 + 25 + 25	1.54	1.93	1.93	3.4	5.4	7.1	690	1260	2150	5.8	5.5	5.3
		20 + 25 + 35	1.45	1.81	2.54	3.4	5.8	7.1	690	1430	2150	6.6	6.3	6.0
		25 + 25 + 25	1.87	1.87	1.87	3.4	5.6	7.1	690	1330	2150	6.1	5.8	5.6
		25 + 25 + 35	1.76	1.76	2.47	3.4	6.0	7.1	690	1490	2150	6.8	6.5	6.3

SCM50ZM-S Table of Indoor unit combination not with SRK-ZMX-S type only

	Indoor unit combination		Heating capacity (kW)						Power consumption (W)			Standard current (A)		
			Room heating capacity (kW)			Total capacity (kW)			Min.	Standard	Max.	220V	230V	240V
			A room	B room	C room	Min.	Standard	Max.						
Heating operation	1 room	20	3.0	—	—	1.4	3.0	3.5	480	1020	1100	4.7	4.5	4.3
		25	3.4	—	—	1.4	3.4	4.0	480	1180	1240	5.4	5.2	5.0
		35	4.5	—	—	1.4	4.5	4.8	480	1470	1490	6.7	6.5	6.2
		50	5.8	—	—	1.4	5.8	6.0	480	1910	2260	8.8	8.4	8.0
	2 room	20 + 20	2.95	2.95	—	2.0	5.9	7.0	540	1510	2580	6.9	6.6	6.4
		20 + 25	2.67	3.33	—	2.0	6.0	7.0	540	1560	2580	7.2	6.9	6.6
		20 + 35	2.29	4.01	—	2.0	6.3	7.0	540	1650	2580	7.6	7.2	6.9
		20 + 50	1.89	4.71	—	2.0	6.6	7.0	540	1740	2580	8.0	7.6	7.3
		25 + 25	3.05	3.05	—	2.0	6.1	7.0	540	1590	2580	7.3	7.0	6.7
		25 + 35	2.67	3.73	—	2.0	6.4	7.0	540	1680	2580	7.7	7.4	7.1
		25 + 50	2.20	4.40	—	2.0	6.6	7.0	540	1740	2580	8.0	7.6	7.3
		35 + 35	3.30	3.30	—	2.0	6.6	7.0	540	1740	2580	8.0	7.6	7.3
		35 + 50	2.72	3.88	—	2.0	6.6	7.0	540	1740	2580	8.0	7.6	7.3
	3 room	20 + 20 + 20	2.00	2.00	2.00	3.0	6.0	7.3	600	1340	2580	6.3	6.1	5.8
		20 + 20 + 25	1.91	1.91	2.38	3.0	6.2	7.3	600	1430	2580	6.8	6.5	6.2
		20 + 20 + 35	1.76	1.76	3.08	3.0	6.6	7.3	600	1600	2580	7.6	7.2	6.9
		20 + 25 + 25	1.83	2.29	2.29	3.0	6.4	7.3	600	1510	2580	7.1	6.8	6.6
		20 + 25 + 35	1.70	2.13	2.98	3.0	6.8	7.3	600	1660	2580	7.9	7.5	7.2
		25 + 25 + 25	2.20	2.20	2.20	3.0	6.6	7.3	600	1600	2580	7.6	7.2	6.9
		25 + 25 + 35	2.06	2.06	2.88	3.0	7.0	7.3	600	1730	2580	8.2	7.8	7.5

	Indoor unit combination		Cooling capacity (kW)						Power consumption (W)			Standard current (A)		
			Room Cooling capacity (kW)			Total capacity (kW)			Min.	Standard	Max.	220V	230V	240V
			A room	B room	C room	Min.	Standard	Max.						
Cooling operation	1 room	20	2.0	—	—	1.8	2.0	2.7	500	580	900	2.7	2.5	2.4
		25	2.5	—	—	1.8	2.5	3.2	500	760	1070	3.5	3.3	3.2
		35	3.5	—	—	1.8	3.5	3.7	500	1140	1230	5.2	5.0	4.8
		50	5.0	—	—	1.8	5.0	5.3	500	1790	2000	8.2	7.9	7.5
	2 room	20 + 20	2.00	2.00	—	3.0	4.0	5.6	570	950	1800	4.4	4.2	4.0
		20 + 25	1.91	2.39	—	3.0	4.3	5.8	570	1110	1980	5.1	4.9	4.7
		20 + 35	1.82	3.19	—	3.0	5.0	6.1	570	1490	2070	6.8	6.5	6.3
		20 + 50	1.71	4.29	—	3.0	6.0	6.3	570	2040	2150	9.4	9.0	8.6
		25 + 25	2.35	2.35	—	3.0	4.7	6.1	570	1320	2070	6.1	5.8	5.6
		25 + 35	2.21	3.09	—	3.0	5.3	6.3	570	1660	2150	7.6	7.3	7.0
		25 + 50	2.00	4.00	—	3.0	6.0	6.3	570	2040	2150	9.4	9.0	8.6
		35 + 35	3.00	3.00	—	3.0	6.0	6.3	570	2040	2150	9.4	9.0	8.6
		35 + 50	2.47	3.53	—	3.0	6.0	6.3	570	2040	2150	9.4	9.0	8.6
	3 room	20 + 20 + 20	1.67	1.67	1.67	3.4	5.0	6.9	690	1120	2150	5.3	5.1	4.9
		20 + 20 + 25	1.60	1.60	2.00	3.4	5.2	6.9	690	1200	2150	5.7	5.4	5.2
		20 + 20 + 35	1.49	1.49	2.61	3.4	5.6	6.9	690	1370	2150	6.5	6.2	5.9
		20 + 25 + 25	1.54	1.93	1.93	3.4	5.4	6.9	690	1300	2150	6.2	5.9	5.6
		20 + 25 + 35	1.45	1.81	2.54	3.4	5.8	6.9	690	1470	2150	7.0	6.7	6.4
		25 + 25 + 25	1.87	1.87	1.87	3.4	5.6	6.9	690	1370	2150	6.5	6.2	5.9
		25 + 25 + 35	1.76	1.76	2.47	3.4	6.0	6.9	690	1540	2150	7.3	7.0	6.7

SCM60ZM-S Table of Indoor unit combination with SRK-ZMX-S type only

	Indoor unit combination		Heating capacity (kW)						Power consumption (W)			Standard current (A)		
			Room heating capacity (kW)			Total capacity (kW)			Min.	Standard	Max.	220V	230V	240V
			A room	B room	C room	Min.	Standard	Max.						
Heating operation	1 room	20	3.0	—	—	1.5	3.0	3.7	600	780	1330	3.6	3.4	3.3
		25	3.4	—	—	1.5	3.4	4.2	600	950	1510	4.4	4.2	4.0
		35	4.5	—	—	1.5	4.5	5.0	600	1290	1790	5.9	5.7	5.4
		50	5.8	—	—	1.5	5.8	6.4	600	1780	2310	8.2	7.8	7.5
		60	6.8	—	—	1.5	6.8	7.3	600	2120	2660	9.7	9.3	8.9
	2 room	20 + 20	3.00	3.00	—	2.1	6.0	7.3	630	1490	2100	6.8	6.5	6.3
		20 + 25	2.71	3.39	—	2.1	6.1	7.5	630	1570	2550	7.2	6.9	6.6
		20 + 35	2.36	4.14	—	2.1	6.5	7.6	630	1680	3000	7.7	7.4	7.1
		20 + 50	2.00	5.00	—	2.1	7.0	7.6	630	1900	3000	8.7	8.3	8.0
		20 + 60	1.78	5.33	—	2.1	7.1	7.6	630	1940	3000	8.9	8.5	8.2
		25 + 25	3.15	3.15	—	2.1	6.3	7.6	630	1630	3000	7.5	7.2	6.9
		25 + 35	2.79	3.91	—	2.1	6.7	7.6	630	1760	3000	8.1	7.7	7.4
		25 + 50	2.37	4.73	—	2.1	7.1	7.6	630	1940	3000	8.9	8.5	8.2
		25 + 60	2.09	5.01	—	2.1	7.1	7.6	630	1940	3000	8.9	8.5	8.2
		35 + 35	3.50	3.50	—	2.1	7.0	7.6	630	1900	3000	8.7	8.3	8.0
		35 + 50	2.92	4.18	—	2.1	7.1	7.6	630	1940	3000	8.9	8.5	8.2
		35 + 60	2.62	4.48	—	2.1	7.1	7.6	630	1940	3000	8.9	8.5	8.2
		50 + 50	3.55	3.55	—	2.1	7.1	7.6	630	1940	3000	8.9	8.5	8.2
		50 + 60	3.23	3.87	—	2.1	7.1	7.6	630	1940	3000	8.9	8.5	8.2
	3 room	20 + 20 + 20	2.20	2.20	2.20	3.2	6.6	7.8	660	1350	3000	6.4	6.1	5.9
		20 + 20 + 25	2.06	2.06	2.58	3.2	6.7	7.8	660	1390	3000	6.6	6.3	6.0
		20 + 20 + 35	1.81	1.81	3.17	3.2	6.8	7.8	660	1510	3000	7.1	6.8	6.6

	Indoor unit combination		Heating capacity (kW)						Power consumption (W)			Standard current (A)		
			Room heating capacity (kW)			Total capacity (kW)			Min.	Standard	Max.	220V	230V	240V
			A room	B room	C room	Min.	Standard	Max.						
Heating operation	3 room	20 + 20 + 50	1.56	1.56	3.89	3.2	7.0	7.8	660	1690	3000	8.0	7.7	7.3
		20 + 20 + 60	1.44	1.44	4.32	3.2	7.2	7.8	660	1860	3000	8.8	8.4	8.1
		20 + 25 + 25	1.94	2.43	2.43	3.2	6.8	7.8	660	1510	3000	7.1	6.8	6.6
		20 + 25 + 35	1.73	2.16	3.02	3.2	6.9	7.8	660	1560	3000	7.4	7.1	6.8
		20 + 25 + 50	1.49	1.87	3.74	3.2	7.1	7.8	660	1740	3000	8.2	7.9	7.6
		20 + 25 + 60	1.37	1.71	4.11	3.2	7.2	7.8	660	1860	3000	8.8	8.4	8.1
		20 + 35 + 35	1.56	2.72	2.72	3.2	7.0	7.8	660	1690	3000	8.0	7.7	7.3
		20 + 35 + 50	1.37	2.40	3.43	3.2	7.2	7.8	660	1860	3000	8.8	8.4	8.1
		25 + 25 + 25	2.27	2.27	2.27	3.2	6.8	7.8	660	1510	3000	7.1	6.8	6.6
		25 + 25 + 35	2.06	2.06	2.88	3.2	7.0	7.8	660	1690	3000	8.0	7.7	7.3
		25 + 25 + 50	1.80	1.80	3.60	3.2	7.2	7.8	660	1860	3000	8.8	8.4	8.1
		25 + 25 + 60	1.64	1.64	3.93	3.2	7.2	7.8	660	1860	3000	8.8	8.4	8.1
		25 + 35 + 35	1.87	2.62	2.62	3.2	7.1	7.8	660	1740	3000	8.2	7.9	7.6
		25 + 35 + 50	1.64	2.29	3.27	3.2	7.2	7.8	660	1860	3000	8.8	8.4	8.1
		35 + 35 + 35	2.40	2.40	2.40	3.2	7.2	7.8	660	1860	3000	8.8	8.4	8.1

	Indoor unit combination		Cooling capacity (kW)						Power consumption (W)			Standard current (A)		
			Room Cooling capacity (kW)			Total capacity (kW)			Min.	Standard	Max.	220V	230V	240V
			A room	B room	C room	Min.	Standard	Max.						
Cooling operation	1 room	20	2.0	–	–	1.8	2.0	2.8	500	540	950	2.5	2.4	2.3
		25	2.5	–	–	1.8	2.5	3.4	500	720	1080	3.3	3.2	3.0
		35	3.5	–	–	1.8	3.5	3.9	500	1090	1240	5.0	4.8	4.6
		50	5.0	–	–	1.8	5.0	5.8	500	1780	2100	8.2	7.8	7.5
		60	6.0	–	–	1.8	6.0	6.3	500	2260	2370	10.4	9.9	9.5
	2 room	20 + 20	2.00	2.00	–	3.0	4.0	5.7	570	750	1750	3.4	3.3	3.2
		20 + 25	2.00	2.50	–	3.0	4.5	5.9	570	990	1910	4.5	4.3	4.2
		20 + 35	1.93	3.37	–	3.0	5.3	6.2	570	1550	2110	7.1	6.8	6.5
		20 + 50	1.89	4.71	–	3.0	6.6	6.9	570	2280	2390	10.5	10.0	9.6
		20 + 60	1.68	5.03	–	3.0	6.7	6.9	570	2320	2390	10.7	10.2	9.8
		25 + 25	2.45	2.45	–	3.0	4.9	6.2	570	1270	2110	5.8	5.6	5.3
		25 + 35	2.42	3.38	–	3.0	5.8	6.5	570	1840	2270	8.4	8.1	7.7
		25 + 50	2.23	4.47	–	3.0	6.7	6.9	570	2320	2390	10.7	10.2	9.8
		25 + 60	1.97	4.73	–	3.0	6.7	6.9	570	2320	2390	10.7	10.2	9.8
		35 + 35	3.30	3.30	–	3.0	6.6	6.9	570	2280	2390	10.5	10.0	9.6
		35 + 50	2.76	3.94	–	3.0	6.7	6.9	570	2320	2390	10.7	10.2	9.8
		35 + 60	2.47	4.23	–	3.0	6.7	6.9	570	2320	2390	10.7	10.2	9.8
		50 + 50	3.35	3.35	–	3.0	6.7	6.9	570	2320	2390	10.7	10.2	9.8
		50 + 60	3.05	3.65	–	3.0	6.7	6.9	570	2320	2390	10.7	10.2	9.8
	3 room	20 + 20 + 20	1.90	1.90	1.90	3.6	5.7	7.5	690	1390	2390	6.6	6.3	6.0
		20 + 20 + 25	1.82	1.82	2.27	3.6	5.9	7.5	690	1410	2390	6.7	6.4	6.1
		20 + 20 + 35	1.60	1.60	2.80	3.6	6.0	7.5	690	1430	2390	6.8	6.5	6.2
		20 + 20 + 50	1.40	1.40	3.50	3.6	6.3	7.5	690	1480	2390	7.0	6.7	6.4
		20 + 20 + 60	1.28	1.28	3.84	3.6	6.4	7.5	690	1500	2390	7.1	6.8	6.5
		20 + 25 + 25	1.69	2.11	2.11	3.6	5.9	7.5	690	1410	2390	6.7	6.4	6.1
		20 + 25 + 35	1.53	1.91	2.67	3.6	6.1	7.5	690	1460	2390	6.9	6.6	6.3
		20 + 25 + 50	1.35	1.68	3.37	3.6	6.4	7.5	690	1500	2390	7.1	6.8	6.5
		20 + 25 + 60	1.26	1.57	3.77	3.6	6.6	7.5	690	1520	2390	7.2	6.9	6.6
		20 + 35 + 35	1.40	2.45	2.45	3.6	6.3	7.5	690	1480	2390	7.0	6.7	6.4
		20 + 35 + 50	1.26	2.20	3.14	3.6	6.6	7.5	690	1520	2390	7.2	6.9	6.6
		25 + 25 + 25	2.00	2.00	2.00	3.6	6.0	7.5	690	1430	2390	6.8	6.5	6.2
		25 + 25 + 35	1.79	1.79	2.51	3.6	6.1	7.5	690	1460	2390	6.9	6.6	6.3
		25 + 25 + 50	1.60	1.60	3.20	3.6	6.4	7.5	690	1500	2390	7.1	6.8	6.5
		25 + 25 + 60	1.52	1.52	3.65	3.6	6.7	7.5	690	1540	2390	7.3	7.0	6.7
		25 + 35 + 35	1.68	2.36	2.36	3.6	6.4	7.5	690	1500	2390	7.1	6.8	6.5
		25 + 35 + 50	1.52	2.13	3.05	3.6	6.7	7.5	690	1540	2390	7.3	7.0	6.7
		35 + 35 + 35	2.20	2.20	2.20	3.6	6.6	7.5	690	1520	2390	7.2	6.9	6.6

SCM60ZM-S Table of Indoor unit combination not with SRK-ZMX-S type only

	Indoor unit combination		Heating capacity (kW)						Power consumption (W)			Standard current (A)		
			Room heating capacity (kW)			Total capacity (kW)			Min.	Standard	Max.	220V	230V	240V
			A room	B room	C room	Min.	Standard	Max.						
Heating operation	1 room	20	3.0	–	–	1.5	3.0	3.5	600	970	1330	4.5	4.3	4.1
		25	3.4	–	–	1.5	3.4	4.0	600	1140	1510	5.2	5.0	4.8
		35	4.5	–	–	1.5	4.5	4.8	600	1480	1790	6.8	6.5	6.2
		50	5.8	–	–	1.5	5.8	6.1	600	1960	2310	9.0	8.6	8.2
		60	6.8	–	–	1.5	6.8	7.0	600	2250	2660	10.3	9.9	9.5
	2 room	20 + 20	3.00	3.00	–	2.1	6.0	7.0	630	1520	2100	7.0	6.7	6.4
		20 + 25	2.71	3.39	–	2.1	6.1	7.2	630	1600	2550	7.3	7.0	6.7
		20 + 35	2.36	4.14	–	2.1	6.5	7.3	630	1710	3000	7.9	7.5	7.2
		20 + 50	2.00	5.00	–	2.1	7.0	7.3	630	1940	3000	8.9	8.5	8.2
		20 + 60	1.78	5.33	–	2.1	7.1	7.3	630	1980	3000	9.1	8.7	8.3
		25 + 25	3.15	3.15	–	2.1	6.3	7.3	630	1660	3000	7.6	7.3	7.0
		25 + 35	2.79	3.91	–	2.1	6.7	7.3	630	1790	3000	8.2	7.9	7.5
		25 + 50	2.37	4.73	–	2.1	7.1	7.3	630	1980	3000	9.1	8.7	8.3
		25 + 60	2.09	5.01	–	2.1	7.1	7.3	630	1980	3000	9.1	8.7	8.3
		35 + 35	3.50	3.50	–	2.1	7.0	7.3	630	1940	3000	8.9	8.5	8.2
		35 + 50	2.92	4.18	–	2.1	7.1	7.3	630	1980	3000	9.1	8.7	8.3
		35 + 60	2.62	4.48	–	2.1	7.1	7.3	630	1980	3000	9.1	8.7	8.3
		50 + 50	3.55	3.55	–	2.1	7.1	7.3	630	1980	3000	9.1	8.7	8.3
		50 + 60	3.23	3.87	–	2.1	7.1	7.3	630	1980	3000	9.1	8.7	8.3
	3 room	20 + 20 + 20	2.20	2.20	2.20	3.2	6.6	7.6	660	1380	3000	6.5	6.3	6.0
		20 + 20 + 25	2.06	2.06	2.58	3.2	6.7	7.6	660	1420	3000	6.7	6.4	6.2
		20 + 20 + 35	1.81	1.81	3.17	3.2	6.8	7.6	660	1540	3000	7.3	7.0	6.7
		20 + 20 + 50	1.56	1.56	3.89	3.2	7.0	7.6	660	1730	3000	8.2	7.8	7.5
		20 + 20 + 60	1.44	1.44	4.32	3.2	7.2	7.6	660	1900	3000	9.0	8.6	8.2
		20 + 25 + 25	1.94	2.43	2.43	3.2	6.8	7.6	660	1540	3000	7.3	7.0	6.7
		20 + 25 + 35	1.73	2.16	3.02	3.2	6.9	7.6	660	1590	3000	7.5	7.2	6.9
		20 + 25 + 50	1.49	1.87	3.74	3.2	7.1	7.6	660	1780	3000	8.4	8.1	7.7
		20 + 25 + 60	1.37	1.71	4.11	3.2	7.2	7.6	660	1900	3000	9.0	8.6	8.2
		20 + 35 + 35	1.56	2.72	2.72	3.2	7.0	7.6	660	1730	3000	8.2	7.8	7.5
		20 + 35 + 50	1.37	2.40	3.43	3.2	7.2	7.6	660	1900	3000	9.0	8.6	8.2
		25 + 25 + 25	2.27	2.27	2.27	3.2	6.8	7.6	660	1540	3000	7.3	7.0	6.7
		25 + 25 + 35	2.06	2.06	2.88	3.2	7.0	7.6	660	1730	3000	8.2	7.8	7.5
		25 + 25 + 50	1.80	1.80	3.60	3.2	7.2	7.6	660	1900	3000	9.0	8.6	8.2
		25 + 25 + 60	1.64	1.64	3.93	3.2	7.2	7.6	660	1900	3000	9.0	8.6	8.2
		25 + 35 + 35	1.87	2.62	2.62	3.2	7.1	7.6	660	1780	3000	8.4	8.1	7.7
		25 + 35 + 50	1.64	2.29	3.27	3.2	7.2	7.6	660	1900	3000	9.0	8.6	8.2
		35 + 35 + 35	2.40	2.40	2.40	3.2	7.2	7.6	660	1900	3000	9.0	8.6	8.2

Cooling operation	Indoor unit combination		Cooling capacity (kW)						Power consumption (W)			Standard current (A)		
			Room Cooling capacity (kW)			Total capacity (kW)								
			A room	B room	C room	Min.	Standard	Max.	Min.	Standard	Max.	220V	230V	240V
	1 room	20	2.0	–	–	1.8	2.0	2.7	500	570	950	2.6	2.5	2.4
		25	2.5	–	–	1.8	2.5	3.2	500	760	1080	3.5	3.3	3.2
		35	3.5	–	–	1.8	3.5	3.7	500	1150	1240	5.3	5.1	4.8
		50	5.0	–	–	1.8	5.0	5.6	500	1860	2100	8.5	8.2	7.8
		60	6.0	–	–	1.8	6.0	6.1	500	2350	2370	10.8	10.3	9.9
	2 room	20 + 20	2.00	2.00	–	3.0	4.0	5.6	570	800	1750	3.7	3.5	3.4
		20 + 25	2.00	2.50	–	3.0	4.5	5.8	570	1050	1910	4.8	4.6	4.4
		20 + 35	1.93	3.37	–	3.0	5.3	6.1	570	1620	2110	7.4	7.1	6.8
		20 + 50	1.89	4.71	–	3.0	6.6	6.8	570	2330	2390	10.7	10.2	9.8
		20 + 60	1.68	5.03	–	3.0	6.7	6.8	570	2370	2390	10.9	10.4	10.0
		25 + 25	2.45	2.45	–	3.0	4.9	6.1	570	1340	2110	6.2	5.9	5.6
		25 + 35	2.42	3.38	–	3.0	5.8	6.4	570	1920	2270	8.8	8.4	8.1
		25 + 50	2.23	4.47	–	3.0	6.7	6.8	570	2370	2390	10.9	10.4	10.0
		25 + 60	1.97	4.73	–	3.0	6.7	6.8	570	2370	2390	10.9	10.4	10.0
		35 + 35	3.30	3.30	–	3.0	6.6	6.8	570	2330	2390	10.7	10.2	9.8
		35 + 50	2.76	3.94	–	3.0	6.7	6.8	570	2370	2390	10.9	10.4	10.0
		35 + 60	2.47	4.23	–	3.0	6.7	6.8	570	2370	2390	10.9	10.4	10.0
		50 + 50	3.35	3.35	–	3.0	6.7	6.8	570	2370	2390	10.9	10.4	10.0
		50 + 60	3.05	3.65	–	3.0	6.7	6.8	570	2370	2390	10.9	10.4	10.0
	3 room	20 + 20 + 20	1.90	1.90	1.90	3.6	5.7	7.3	690	1430	2390	6.8	6.5	6.2
		20 + 20 + 25	1.82	1.82	2.27	3.6	5.9	7.3	690	1450	2390	6.9	6.6	6.3
		20 + 20 + 35	1.60	1.60	2.80	3.6	6.0	7.3	690	1470	2390	7.0	6.7	6.4
		20 + 20 + 50	1.40	1.40	3.50	3.6	6.3	7.3	690	1520	2390	7.2	6.9	6.6
		20 + 20 + 60	1.28	1.28	3.84	3.6	6.4	7.3	690	1540	2390	7.3	7.0	6.7
		20 + 25 + 25	1.69	2.11	2.11	3.6	5.9	7.3	690	1450	2390	6.9	6.6	6.3
		20 + 25 + 35	1.53	1.91	2.67	3.6	6.1	7.3	690	1500	2390	7.1	6.8	6.5
		20 + 25 + 50	1.35	1.68	3.37	3.6	6.4	7.3	690	1540	2390	7.3	7.0	6.7
		20 + 25 + 60	1.26	1.57	3.77	3.6	6.6	7.3	690	1560	2390	7.4	7.1	6.8
		20 + 35 + 35	1.40	2.45	2.45	3.6	6.3	7.3	690	1520	2390	7.2	6.9	6.6
		20 + 35 + 50	1.26	2.20	3.14	3.6	6.6	7.3	690	1560	2390	7.4	7.1	6.8
		25 + 25 + 25	2.00	2.00	2.00	3.6	6.0	7.3	690	1470	2390	7.0	6.7	6.4
		25 + 25 + 35	1.79	1.79	2.51	3.6	6.1	7.3	690	1500	2390	7.1	6.8	6.5
		25 + 25 + 50	1.60	1.60	3.20	3.6	6.4	7.3	690	1540	2390	7.3	7.0	6.7
		25 + 25 + 60	1.52	1.52	3.65	3.6	6.7	7.3	690	1580	2390	7.5	7.2	6.9
		25 + 35 + 35	1.68	2.36	2.36	3.6	6.4	7.3	690	1540	2390	7.3	7.0	6.7
		25 + 35 + 50	1.52	2.13	3.05	3.6	6.7	7.3	690	1580	2390	7.5	7.2	6.9
		35 + 35 + 35	2.20	2.20	2.20	3.6	6.6	7.3	690	1560	2390	7.4	7.1	6.8

SCM71ZM-S Table of Indoor unit combination with SRK-ZMX-S type only

Heating operation	Indoor unit combination		Heating capacity (kW)							Power consumption (W)			Standard current (A)		
			Room heating capacity (kW)				Total capacity (kW)								
			A room	B room	C room	D room	Min.	Standard	Max.	Min.	Standard	Max.	220V	230V	240V
	1 room	20	3.0	–	–	–	1.5	3.0	3.7	600	840	1330	3.9	3.7	3.5
		25	3.4	–	–	–	1.5	3.4	4.2	600	1000	1510	4.6	4.4	4.2
		35	4.5	–	–	–	1.5	4.5	5.0	600	1330	1790	6.1	5.8	5.6
		50	5.8	–	–	–	1.5	5.8	6.5	600	1780	2310	8.2	7.8	7.5
		60	6.8	–	–	–	1.5	6.8	7.5	600	2100	2660	9.6	9.2	8.8
	2 room	20 + 20	2.70	2.70	–	–	2.1	5.4	7.4	630	1340	1870	6.2	5.9	5.6
		20 + 25	2.62	3.28	–	–	2.1	5.9	7.7	630	1530	2130	7.0	6.7	6.4
		20 + 35	2.51	4.39	–	–	2.1	6.9	8.3	630	1910	2650	8.8	8.4	8.0
		20 + 50	2.34	5.86	–	–	2.1	8.2	8.7	630	2430	3350	11.2	10.7	10.2
		20 + 60	2.05	6.15	–	–	2.1	8.2	8.7	630	2430	3350	11.2	10.7	10.2
		25 + 25	3.20	3.20	–	–	2.1	6.4	8.1	630	1700	2480	7.8	7.5	7.2
		25 + 35	3.08	4.32	–	–	2.1	7.4	8.6	630	2090	2910	9.6	9.2	8.8
		25 + 50	2.73	5.47	–	–	2.1	8.2	8.7	630	2430	3350	11.2	10.7	10.2
		25 + 60	2.41	5.79	–	–	2.1	8.2	8.7	630	2430	3350	11.2	10.7	10.2
		35 + 35	4.10	4.10	–	–	2.1	8.2	8.7	630	2430	3350	11.2	10.7	10.2
		35 + 50	3.38	4.82	–	–	2.1	8.2	8.7	630	2430	3350	11.2	10.7	10.2
		35 + 60	3.02	5.18	–	–	2.1	8.2	8.7	630	2430	3350	11.2	10.7	10.2
		50 + 50	4.10	4.10	–	–	2.1	8.2	8.7	630	2430	3350	11.2	10.7	10.2
		50 + 60	3.73	4.47	–	–	2.1	8.2	8.7	630	2430	3350	11.2	10.7	10.2
		60 + 60	4.10	4.10	–	–	2.1	8.2	8.7	630	2430	3350	11.2	10.7	10.2
	3 room	20 + 20 + 20	2.57	2.57	2.57	–	3.2	7.7	9.1	660	1830	3350	8.4	8.0	7.7
		20 + 20 + 25	2.46	2.46	3.08	–	3.2	8.0	9.1	660	1930	3350	8.9	8.5	8.1
		20 + 20 + 35	2.24	2.24	3.92	–	3.2	8.4	9.1	660	2060	3350	9.5	9.0	8.7
		20 + 20 + 50	1.87	1.87	4.67	–	3.2	8.4	9.1	660	2060	3350	9.5	9.0	8.7
		20 + 20 + 60	1.68	1.68	5.04	–	3.2	8.4	9.1	660	2060	3350	9.5	9.0	8.7
		20 + 25 + 25	2.34	2.93	2.93	–	3.2	8.2	9.1	660	1990	3350	9.1	8.7	8.4
		20 + 25 + 35	2.10	2.63	3.68	–	3.2	8.4	9.1	660	2060	3350	9.5	9.0	8.7
		20 + 25 + 50	1.77	2.21	4.42	–	3.2	8.4	9.1	660	2060	3350	9.5	9.0	8.7
		20 + 25 + 60	1.60	2.00	4.80	–	3.2	8.4	9.1	660	2060	3350	9.5	9.0	8.7
		20 + 35 + 35	1.87	3.27	3.27	–	3.2	8.4	9.1	660	2060	3350	9.5	9.0	8.7
		20 + 35 + 50	1.60	2.80	4.00	–	3.2	8.4	9.1	660	2060	3350	9.5	9.0	8.7
		20 + 35 + 60	1.46	2.56	4.38	–	3.2	8.4	9.1	660	2060	3350	9.5	9.0	8.7
		20 + 50 + 50	1.40	3.50	3.50	–	3.2	8.4	9.1	660	2060	3350	9.5	9.0	8.7
		25 + 25 + 25	2.80	2.80	2.80	–	3.2	8.4	9.1	660	2060	3350	9.5	9.0	8.7
		25 + 25 + 35	2.47	2.47	3.46	–	3.2	8.4	9.1	660	2060	3350	9.5	9.0	8.7
		25 + 25 + 50	2.10	2.10	4.20	–	3.2	8.4	9.1	660	2060	3350	9.5	9.0	8.7
		25 + 25 + 60	1.91	1.91	4.58	–	3.2	8.4	9.1	660	2060	3350	9.5	9.0	8.7
		25 + 35 + 35	2.21	3.09	3.09	–	3.2	8.4	9.1	660	2060	3350	9.5	9.0	8.7
		25 + 35 + 50	1.91	2.67	3.82	–	3.2	8.4	9.1	660	2060	3350	9.5	9.0	8.7
		25 + 35 + 60	1.75	2.45	4.20	–	3.2	8.4	9.1	660	2060	3350	9.5	9.0	8.7
		25 + 50 + 50	1.68	3.36	3.36	–	3.2	8.4	9.1	660	2060	3350	9.5	9.0	8.7
		35 + 35 + 35	2.80	2.80	2.80	–	3.2	8.4	9.1	660	2060	3350	9.5	9.0	8.7
		35 + 35 + 50	2.45	2.45	3.50	–	3.2	8.4	9.1	660	2060	3350	9.5	9.0	8.7
	4 room	20 + 20 + 20 + 20	2.10	2.10	2.10	2.10	3.6	8.4	9.4	800	1960	3350	9.0	8.6	8.2
		20 + 20 + 20 + 25	1.98	1.98	1.98	2.47	3.6	8.4	9.4	800	1960	3350	9.0	8.6	8.2
		20 + 20 + 20 + 35	1.79	1.79	1.79	3.13	3.6	8.5	9.4	800	1980	3350	9.1	8.7	8.3
		20 + 20 + 20 + 50	1.56	1.56	1.56	3.91	3.6	8.6	9.4	800	2000	3350	9.2	8.8	8.4
		20 + 20 + 20 + 60	1.43	1.43	1.43	4.30	3.6	8.6	9.4	800	2000	3350	9.2	8.8	8.4
		20 + 20 + 25 + 25	1.89	1.89	2.36	2.36	3.6	8.5	9.4	800	1980	3350	9.1	8.7	8.3
		20 + 20 + 25 + 35	1.70	1.70	2.13	2.98	3.6	8.5	9.4	800	1980	3350	9.1	8.7	8.3
		20 + 20 + 25 + 50	1.50	1.50	1.87	3.74	3.6	8.6	9.4	800	2000	3350	9.2	8.8	8.4
		20 + 20 + 25 + 60	1.38	1.38	1.72	4.13	3.6	8.6	9.4	800	2000	3350	9.2	8.8	8.4
		20 + 20 + 35 + 35	1.56	1.56	2.74	2.74	3.6	8.6	9.4	800	2000	3350	9.2	8.8	8.4
		20 + 20 + 35 + 50	1.38	1.38	2.41	3.44	3.6	8.6	9.4	800	2000	3350	9.2	8.8	8.4
		20 + 25 + 25 + 25	1.79	2.24	2.24	2.24	3.6	8.5	9.4	800	1980	3350	9.1	8.7	8.3

Indoor unit combination			Heating capacity (kW)							Power consumption (W)			Standard current (A)		
			Room heating capacity (kW)				Total capacity (kW)								
			A room	B room	C room	D room	Min.	Standard	Max.	Min.	Standard	Max.	220V	230V	240V
Heating operation	4 room	20 + 25 + 25 + 35	1.64	2.05	2.05	2.87	3.6	8.6	9.4	800	2000	3350	9.2	8.8	8.4
		20 + 25 + 25 + 50	1.43	1.79	1.79	3.58	3.6	8.6	9.4	800	2000	3350	9.2	8.8	8.4
		20 + 25 + 35 + 35	1.50	1.87	2.62	2.62	3.6	8.6	9.4	800	2000	3350	9.2	8.8	8.4
		20 + 35 + 35 + 35	1.38	2.41	2.41	2.41	3.6	8.6	9.4	800	2000	3350	9.2	8.8	8.4
		25 + 25 + 25 + 25	2.13	2.13	2.13	2.13	3.6	8.5	9.4	800	1980	3350	9.1	8.7	8.3
		25 + 25 + 25 + 35	1.95	1.95	1.95	2.74	3.6	8.6	9.4	800	2000	3350	9.2	8.8	8.4
		25 + 25 + 25 + 50	1.72	1.72	1.72	3.44	3.6	8.6	9.4	800	2000	3350	9.2	8.8	8.4
		25 + 25 + 35 + 35	1.79	1.79	2.51	2.51	3.6	8.6	9.4	800	2000	3350	9.2	8.8	8.4

Indoor unit combination			Cooling capacity (kW)							Power consumption (W)			Standard current (A)		
			Room cooling capacity (kW)				Total capacity (kW)								
			A room	B room	C room	D room	Min.	Standard	Max.	Min.	Standard	Max.	220V	230V	240V
Cooling operation	1 room	20	2.0	—	—	—	1.8	2.0	2.8	480	500	950	2.3	2.2	2.1
		25	2.5	—	—	—	1.8	2.5	3.4	480	680	1080	3.1	3.0	2.9
		35	3.5	—	—	—	1.8	3.5	3.9	480	1010	1240	4.6	4.4	4.3
		50	5.0	—	—	—	1.8	5.0	6.1	480	1530	2100	7.0	6.7	6.4
		60	6.0	—	—	—	1.8	6.0	7.0	480	1880	2700	8.6	8.3	7.9
	2 room	20 + 20	2.00	2.00	—	—	3.0	4.0	6.1	550	850	1910	3.9	3.7	3.6
		20 + 25	2.00	2.50	—	—	3.0	4.5	6.4	550	1070	2060	4.9	4.7	4.5
		20 + 35	2.00	3.51	—	—	3.0	5.5	6.9	550	1470	2320	6.7	6.5	6.2
		20 + 50	1.94	4.86	—	—	3.0	6.8	7.7	550	2030	2750	9.3	8.9	8.5
		20 + 60	1.70	5.10	—	—	3.0	6.8	7.7	550	2030	2750	9.3	8.9	8.5
		25 + 25	2.50	2.50	—	—	3.0	5.0	6.8	550	1250	2270	5.7	5.5	5.3
		25 + 35	2.46	3.44	—	—	3.0	5.9	7.2	550	1660	2470	7.6	7.3	7.0
		25 + 50	2.27	4.53	—	—	3.0	6.8	7.7	550	2030	2750	9.3	8.9	8.5
		25 + 60	2.00	4.80	—	—	3.0	6.8	7.7	550	2030	2750	9.3	8.9	8.5
		35 + 35	3.40	3.40	—	—	3.0	6.8	7.6	550	2030	2680	9.3	8.9	8.5
		35 + 50	2.80	4.00	—	—	3.0	6.8	7.7	550	2030	2750	9.3	8.9	8.5
		35 + 60	2.51	4.29	—	—	3.0	6.8	7.7	550	2030	2750	9.3	8.9	8.5
		50 + 50	3.40	3.40	—	—	3.0	6.8	7.7	550	2030	2750	9.3	8.9	8.5
		50 + 60	3.09	3.71	—	—	3.0	6.8	7.7	550	2030	2750	9.3	8.9	8.5
		60 + 60	3.40	3.40	—	—	3.0	6.8	7.7	550	2030	2750	9.3	8.9	8.5
	3 room	20 + 20 + 20	2.00	2.00	2.00	—	3.7	6.0	8.2	670	1380	2750	6.3	6.1	5.8
		20 + 20 + 25	2.00	2.00	2.50	—	3.7	6.5	8.2	670	1560	2750	7.2	6.9	6.6
		20 + 20 + 35	1.84	1.84	3.22	—	3.7	6.9	8.2	670	1830	2750	8.4	8.0	7.7
		20 + 20 + 50	1.53	1.53	3.83	—	3.7	6.9	8.2	670	1830	2750	8.4	8.0	7.7
		20 + 20 + 60	1.38	1.38	4.14	—	3.7	6.9	8.2	670	1830	2750	8.4	8.0	7.7
		20 + 25 + 25	1.94	2.43	2.43	—	3.7	6.8	8.2	670	1740	2750	8.0	7.6	7.3
		20 + 25 + 35	1.73	2.16	3.02	—	3.7	6.9	8.2	670	1830	2750	8.4	8.0	7.7
		20 + 25 + 50	1.45	1.82	3.63	—	3.7	6.9	8.2	670	1830	2750	8.4	8.0	7.7
		20 + 25 + 60	1.31	1.64	3.94	—	3.7	6.9	8.2	670	1830	2750	8.4	8.0	7.7
		20 + 35 + 35	1.53	2.68	2.68	—	3.7	6.9	8.2	670	1830	2750	8.4	8.0	7.7
		20 + 35 + 50	1.31	2.30	3.29	—	3.7	6.9	8.2	670	1830	2750	8.4	8.0	7.7
		20 + 35 + 60	1.20	2.10	3.60	—	3.7	6.9	8.2	670	1830	2750	8.4	8.0	7.7
		20 + 50 + 50	1.15	2.88	2.88	—	3.7	6.9	8.2	670	1830	2750	8.4	8.0	7.7
		25 + 25 + 25	2.30	2.30	2.30	—	3.7	6.9	8.2	670	1830	2750	8.4	8.0	7.7
		25 + 25 + 35	2.03	2.03	2.84	—	3.7	6.9	8.2	670	1830	2750	8.4	8.0	7.7
		25 + 25 + 50	1.73	1.73	3.45	—	3.7	6.9	8.2	670	1830	2750	8.4	8.0	7.7
		25 + 25 + 60	1.57	1.57	3.76	—	3.7	6.9	8.2	670	1830	2750	8.4	8.0	7.7
		25 + 35 + 35	1.82	2.54	2.54	—	3.7	6.9	8.2	670	1830	2750	8.4	8.0	7.7
		25 + 35 + 50	1.57	2.20	3.14	—	3.7	6.9	8.2	670	1830	2750	8.4	8.0	7.7
		25 + 35 + 60	1.44	2.01	3.45	—	3.7	6.9	8.2	670	1830	2750	8.4	8.0	7.7
		25 + 50 + 50	1.38	2.76	2.76	—	3.7	6.9	8.2	670	1830	2750	8.4	8.0	7.7
		35 + 35 + 35	2.30	2.30	2.30	—	3.7	6.9	8.2	670	1830	2750	8.4	8.0	7.7
		35 + 35 + 50	2.01	2.01	2.88	—	3.7	6.9	8.2	670	1830	2750	8.4	8.0	7.7
	4 room	20 + 20 + 20 + 20	1.73	1.73	1.73	1.73	4.4	6.9	8.8	890	1700	2750	7.8	7.5	7.2
		20 + 20 + 20 + 25	1.62	1.62	1.62	2.03	4.4	6.9	8.8	890	1700	2750	7.8	7.5	7.2
		20 + 20 + 20 + 35	1.49	1.49	1.49	2.62	4.4	7.1	8.8	890	1740	2750	8.0	7.6	7.3
		20 + 20 + 20 + 50	1.29	1.29	1.29	3.23	4.4	7.1	8.8	890	1740	2750	8.0	7.6	7.3
		20 + 20 + 20 + 60	1.18	1.18	1.18	3.55	4.4	7.1	8.8	890	1740	2750	8.0	7.6	7.3
		20 + 20 + 25 + 25	1.53	1.53	1.92	1.92	4.4	6.9	8.8	890	1700	2750	7.8	7.5	7.2
		20 + 20 + 25 + 35	1.42	1.42	1.78	2.49	4.4	7.1	8.8	890	1740	2750	8.0	7.6	7.3
		20 + 20 + 25 + 50	1.23	1.23	1.54	3.09	4.4	7.1	8.8	890	1740	2750	8.0	7.6	7.3
		20 + 20 + 25 + 60	1.14	1.14	1.42	3.41	4.4	7.1	8.8	890	1740	2750	8.0	7.6	7.3
		20 + 20 + 35 + 35	1.29	1.29	2.27	2.27	4.4	7.1	8.8	890	1740	2750	8.0	7.6	7.3
		20 + 20 + 35 + 50	1.14	1.14	1.99	2.84	4.4	7.1	8.8	890	1740	2750	8.0	7.6	7.3
		20 + 25 + 25 + 25	1.49	1.87	1.87	1.87	4.4	7.1	8.8	890	1740	2750	8.0	7.6	7.3
		20 + 25 + 25 + 35	1.35	1.69	1.69	2.37	4.4	7.1	8.8	890	1740	2750	8.0	7.6	7.3
		20 + 25 + 25 + 50	1.18	1.48	1.48	2.96	4.4	7.1	8.8	890	1740	2750	8.0	7.6	7.3
		20 + 25 + 35 + 35	1.23	1.54	2.16	2.16	4.4	7.1	8.8	890	1740	2750	8.0	7.6	7.3
		20 + 35 + 35 + 35	1.14	1.99	1.99	1.99	4.4	7.1	8.8	890	1740	2750	8.0	7.6	7.3
		25 + 25 + 25 + 25	1.78	1.78	1.78	1.78	4.4	7.1	8.8	890	1740	2750	8.0	7.6	7.3
		25 + 25 + 25 + 35	1.61	1.61	1.61	2.27	4.4	7.1	8.8	890	1740	2750	8.0	7.6	7.3
		25 + 25 + 25 + 50	1.42	1.42	1.42	2.84	4.4	7.1	8.8	890	1740	2750	8.0	7.6	7.3
		25 + 25 + 35 + 35	1.48	1.48	2.07	2.07	4.4	7.1	8.8	890	1740	2750	8.0	7.6	7.3

SCM71ZM-S Table of Indoor unit combination not with SRK-ZMX-S type only

Indoor unit combination			Heating capacity (kW)							Power consumption (W)			Standard current (A)		
			Room heating capacity (kW)				Total capacity (kW)								
			A room	B room	C room	D room	Min.	Standard	Max.	Min.	Standard	Max.	220V	230V	240V
Heating operation	1 room	20	3.0	—	—	—	1.5	3.0	3.5	600	1060	1330	4.9	4.7	4.5
		25	3.4	—	—	—	1.5	3.4	4.0	600	1220	1510	5.6	5.4	5.1
		35	4.5	—	—	—	1.5	4.5	4.8	600	1510	1790	6.9	6.6	6.4
		50	5.8	—	—	—	1.5	5.8	6.2	600	1950	2310	9.0	8.6	8.2
		60	6.8	—	—	—	1.5	6.8	7.1	600	2240	2660	10.3	9.8	9.4
	2 room	20 + 20	2.70	2.70	—	—	2.1	5.4	7.0	630	1370	1870	6.3	6.0	5.8
		20 + 25	2.62	3.28	—	—	2.1	5.9	7.3	630	1560	2130	7.2	6.9	6.6
		20 + 35	2.51	4.39	—	—	2.1	6.9	7.9	630	1950	2650	9.0	8.6	8.2
		20 + 50	2.34	5.86	—	—	2.1	8.2	8.3	630	2490	3350	11.4	10.9	10.5
		20 + 60	2.05	6.15	—	—	2.1	8.2	8.3	630	2490	3350	11.4	10.9	10.5
		25 + 25	3.20	3.20	—	—	2.1	6.4	7.7	630	1740	2480	8.0	7.6	7.3
		25 + 35	3.08	4.32	—	—	2.1	7.4	8.2	630	2130	2910	9.8	9.4	9.0
		25 + 50	2.73	5.47	—	—	2.1	8.2	8.3	630	2490	3350	11.4	10.9	10.5
		25 + 60	2.41	5.79	—	—	2.1	8.2	8.3	630	2490	3350	11.4	10.9	10.5
		35 + 35	4.10	4.10	—	—	2.1	8.2	8.3	630	2490	3350	11.4	10.9	10.5
		35 + 50	3.38	4.82	—	—	2.1	8.2	8.3	630	2490	3350	11.4	10.9	10.5
		35 + 60	3.02	5.18	—	—	2.1	8.2	8.3	630	2490	3350	11.4	10.9	10.5

Heating operation

Indoor unit combination			Heating capacity (kW)							Power consumption (W)			Standard current (A)		
			Room heating capacity (kW)				Total capacity (kW)								
			A room	B room	C room	D room	Min.	Standard	Max.	Min.	Standard	Max.	220V	230V	240V
Heating operation	2 room	50 + 50	4.10	4.10	—	—	2.1	8.2	8.3	630	2490	3350	11.4	10.9	10.5
		50 + 60	3.73	4.47	—	—	2.1	8.2	8.3	630	2490	3350	11.4	10.9	10.5
		60 + 60	4.10	4.10	—	—	2.1	8.2	8.3	630	2490	3350	11.4	10.9	10.5
	3 room	20 + 20 + 20	2.57	2.57	2.57	—	3.2	7.7	8.9	660	1870	3350	8.6	8.2	7.9
		20 + 20 + 25	2.46	2.46	3.08	—	3.2	8.0	8.9	660	1970	3350	9.0	8.7	8.3
		20 + 20 + 35	2.24	2.24	3.92	—	3.2	8.4	8.9	660	2100	3350	9.6	9.2	8.8
		20 + 20 + 50	1.87	1.87	4.67	—	3.2	8.4	8.9	660	2100	3350	9.6	9.2	8.8
		20 + 20 + 60	1.68	1.68	5.04	—	3.2	8.4	8.9	660	2100	3350	9.6	9.2	8.8
		20 + 25 + 25	2.34	2.93	2.93	—	3.2	8.2	8.9	660	2030	3350	9.3	8.9	8.5
		20 + 25 + 35	2.10	2.63	3.68	—	3.2	8.4	8.9	660	2100	3350	9.6	9.2	8.8
		20 + 25 + 50	1.77	2.21	4.42	—	3.2	8.4	8.9	660	2100	3350	9.6	9.2	8.8
		20 + 25 + 60	1.60	2.00	4.80	—	3.2	8.4	8.9	660	2100	3350	9.6	9.2	8.8
		20 + 35 + 35	1.87	3.27	3.27	—	3.2	8.4	8.9	660	2100	3350	9.6	9.2	8.8
		20 + 35 + 50	1.60	2.80	4.00	—	3.2	8.4	8.9	660	2100	3350	9.6	9.2	8.8
		20 + 35 + 60	1.46	2.56	4.38	—	3.2	8.4	8.9	660	2100	3350	9.6	9.2	8.8
		20 + 50 + 50	1.40	3.50	3.50	—	3.2	8.4	8.9	660	2100	3350	9.6	9.2	8.8
		25 + 25 + 25	2.80	2.80	2.80	—	3.2	8.4	8.9	660	2100	3350	9.6	9.2	8.8
		25 + 25 + 35	2.47	2.47	3.46	—	3.2	8.4	8.9	660	2100	3350	9.6	9.2	8.8
		25 + 25 + 50	2.10	2.10	4.20	—	3.2	8.4	8.9	660	2100	3350	9.6	9.2	8.8
		25 + 25 + 60	1.91	1.91	4.58	—	3.2	8.4	8.9	660	2100	3350	9.6	9.2	8.8
		25 + 35 + 35	2.21	3.09	3.09	—	3.2	8.4	8.9	660	2100	3350	9.6	9.2	8.8
		25 + 35 + 50	1.91	2.67	3.82	—	3.2	8.4	8.9	660	2100	3350	9.6	9.2	8.8
		25 + 35 + 60	1.75	2.45	4.20	—	3.2	8.4	8.9	660	2100	3350	9.6	9.2	8.8
		25 + 50 + 50	1.68	3.36	3.36	—	3.2	8.4	8.9	660	2100	3350	9.6	9.2	8.8
		35 + 35 + 35	2.80	2.80	2.80	—	3.2	8.4	8.9	660	2100	3350	9.6	9.2	8.8
		35 + 35 + 50	2.45	2.45	3.50	—	3.2	8.4	8.9	660	2100	3350	9.6	9.2	8.8
	4 room	20 + 20 + 20 + 20	2.10	2.10	2.10	2.10	3.6	8.4	9.1	800	2010	3350	9.2	8.8	8.5
		20 + 20 + 20 + 25	1.98	1.98	1.98	2.47	3.6	8.4	9.1	800	2010	3350	9.2	8.8	8.5
		20 + 20 + 20 + 35	1.79	1.79	1.79	3.13	3.6	8.5	9.1	800	2030	3350	9.3	8.9	8.5
		20 + 20 + 20 + 50	1.56	1.56	1.56	3.91	3.6	8.6	9.1	800	2050	3350	9.4	9.0	8.6
		20 + 20 + 20 + 60	1.43	1.43	1.43	4.30	3.6	8.6	9.1	800	2050	3350	9.4	9.0	8.6
		20 + 20 + 25 + 25	1.89	1.89	2.36	2.36	3.6	8.5	9.1	800	2030	3350	9.3	8.9	8.5
		20 + 20 + 25 + 35	1.70	1.70	2.13	2.98	3.6	8.5	9.1	800	2030	3350	9.3	8.9	8.5
		20 + 20 + 25 + 50	1.50	1.50	1.87	3.74	3.6	8.6	9.1	800	2050	3350	9.4	9.0	8.6
		20 + 20 + 25 + 60	1.38	1.38	1.72	4.13	3.6	8.6	9.1	800	2050	3350	9.4	9.0	8.6
		20 + 20 + 35 + 35	1.56	1.56	2.74	2.74	3.6	8.6	9.1	800	2050	3350	9.4	9.0	8.6
		20 + 20 + 35 + 50	1.38	1.38	2.41	3.44	3.6	8.6	9.1	800	2050	3350	9.4	9.0	8.6
		20 + 25 + 25 + 25	1.79	2.24	2.24	2.24	3.6	8.5	9.1	800	2030	3350	9.3	8.9	8.5
		20 + 25 + 25 + 35	1.64	2.05	2.05	2.87	3.6	8.6	9.1	800	2050	3350	9.4	9.0	8.6
		20 + 25 + 25 + 50	1.43	1.79	1.79	3.58	3.6	8.6	9.1	800	2050	3350	9.4	9.0	8.6
		20 + 25 + 35 + 35	1.50	1.87	2.62	2.62	3.6	8.6	9.1	800	2050	3350	9.4	9.0	8.6
		20 + 35 + 35 + 35	1.38	2.41	2.41	2.41	3.6	8.6	9.1	800	2050	3350	9.4	9.0	8.6
		25 + 25 + 25 + 25	2.13	2.13	2.13	2.13	3.6	8.5	9.1	800	2030	3350	9.3	8.9	8.5
		25 + 25 + 25 + 35	1.95	1.95	1.95	2.74	3.6	8.6	9.1	800	2050	3350	9.4	9.0	8.6
		25 + 25 + 25 + 50	1.72	1.72	1.72	3.44	3.6	8.6	9.1	800	2050	3350	9.4	9.0	8.6
		25 + 25 + 35 + 35	1.79	1.79	2.51	2.51	3.6	8.6	9.1	800	2050	3350	9.4	9.0	8.6

Cooling operation

Indoor unit combination			Cooling capacity (kW)							Power consumption (W)			Standard current (A)		
			Room cooling capacity (kW)				Total capacity (kW)								
			A room	B room	C room	D room	Min.	Standard	Max.	Min.	Standard	Max.	220V	230V	240V
Cooling operation	1 room	20	2.0	—	—	—	1.8	2.0	2.7	480	530	950	2.4	2.3	2.2
		25	2.5	—	—	—	1.8	2.5	3.2	480	730	1080	3.4	3.2	3.1
		35	3.5	—	—	—	1.8	3.5	3.7	480	1120	1240	5.1	4.9	4.7
		50	5.0	—	—	—	1.8	5.0	5.8	480	1710	2100	7.9	7.5	7.2
		60	6.0	—	—	—	1.8	6.0	6.7	480	2140	2700	9.8	9.4	9.0
	2 room	20 + 20	2.00	2.00	—	—	3.0	4.0	5.8	550	930	1910	4.3	4.1	3.9
		20 + 25	2.00	2.50	—	—	3.0	4.5	6.1	550	1170	2060	5.4	5.1	4.9
		20 + 35	2.00	3.51	—	—	3.0	5.5	6.6	550	1590	2320	7.3	7.0	6.7
		20 + 50	1.94	4.86	—	—	3.0	6.8	7.3	550	2150	2750	9.9	9.4	9.0
		20 + 60	1.70	5.10	—	—	3.0	6.8	7.3	550	2150	2750	9.9	9.4	9.0
		25 + 25	2.50	2.50	—	—	3.0	5.0	6.5	550	1360	2270	6.2	6.0	5.7
		25 + 35	2.46	3.44	—	—	3.0	5.9	6.8	550	1780	2470	8.2	7.8	7.5
		25 + 50	2.27	4.53	—	—	3.0	6.8	7.3	550	2150	2750	9.9	9.4	9.0
		25 + 60	2.00	4.80	—	—	3.0	6.8	7.3	550	2150	2750	9.9	9.4	9.0
		35 + 35	3.40	3.40	—	—	3.0	6.8	7.2	550	2150	2680	9.9	9.4	9.0
		35 + 50	2.80	4.00	—	—	3.0	6.8	7.3	550	2150	2750	9.9	9.4	9.0
		35 + 60	2.51	4.29	—	—	3.0	6.8	7.3	550	2150	2750	9.9	9.4	9.0
		50 + 50	3.40	3.40	—	—	3.0	6.8	7.3	550	2150	2750	9.9	9.4	9.0
		50 + 60	3.09	3.71	—	—	3.0	6.8	7.3	550	2150	2750	9.9	9.4	9.0
		60 + 60	3.40	3.40	—	—	3.0	6.8	7.3	550	2150	2750	9.9	9.4	9.0
	3 room	20 + 20 + 20	2.00	2.00	2.00	—	3.7	6.0	7.8	670	1450	2750	6.7	6.4	6.1
		20 + 20 + 25	2.00	2.00	2.50	—	3.7	6.5	7.8	670	1630	2750	7.5	7.2	6.9
		20 + 20 + 35	1.84	1.84	3.22	—	3.7	6.9	7.8	670	1910	2750	8.8	8.4	8.0
		20 + 20 + 50	1.53	1.53	3.83	—	3.7	6.9	7.8	670	1910	2750	8.8	8.4	8.0
		20 + 20 + 60	1.38	1.38	4.14	—	3.7	6.9	7.8	670	1910	2750	8.8	8.4	8.0
		20 + 25 + 25	1.94	2.43	2.43	—	3.7	6.8	7.8	670	1820	2750	8.4	8.0	7.7
		20 + 25 + 35	1.73	2.16	3.02	—	3.7	6.9	7.8	670	1910	2750	8.8	8.4	8.0
		20 + 25 + 50	1.45	1.82	3.63	—	3.7	6.9	7.8	670	1910	2750	8.8	8.4	8.0
		20 + 25 + 60	1.31	1.64	3.94	—	3.7	6.9	7.8	670	1910	2750	8.8	8.4	8.0
		20 + 35 + 35	1.53	2.68	2.68	—	3.7	6.9	7.8	670	1910	2750	8.8	8.4	8.0
		20 + 35 + 50	1.31	2.30	3.29	—	3.7	6.9	7.8	670	1910	2750	8.8	8.4	8.0
		20 + 35 + 60	1.20	2.10	3.60	—	3.7	6.9	7.8	670	1910	2750	8.8	8.4	8.0
		20 + 50 + 50	1.15	2.88	2.88	—	3.7	6.9	7.8	670	1910	2750	8.8	8.4	8.0
		25 + 25 + 25	2.30	2.30	2.30	—	3.7	6.9	7.8	670	1910	2750	8.8	8.4	8.0
		25 + 25 + 35	2.03	2.03	2.84	—	3.7	6.9	7.8	670	1910	2750	8.8	8.4	8.0
		25 + 25 + 50	1.73	1.73	3.45	—	3.7	6.9	7.8	670	1910	2750	8.8	8.4	8.0
		25 + 25 + 60	1.57	1.57	3.76	—	3.7	6.9	7.8	670	1910	2750	8.8	8.4	8.0
		25 + 35 + 35	1.82	2.54	2.54	—	3.7	6.9	7.8	670	1910	2750	8.8	8.4	8.0
		25 + 35 + 50	1.57	2.20	3.14	—	3.7	6.9	7.8	670	1910	2750	8.8	8.4	8.0
		25 + 35 + 60	1.44	2.01	3.45	—	3.7	6.9	7.8	670	1910	2750	8.8	8.4	8.0
		25 + 50 + 50	1.38	2.76	2.76	—	3.7	6.9	7.8	670	1910	2750	8.8	8.4	8.0
		35 + 35 + 35	2.30	2.30	2.30	—	3.7	6.9	7.8	670	1910	2750	8.8	8.4	8.0
		35 + 35 + 50	2.01	2.01	2.88	—	3.7	6.9	7.8	670	1910	2750	8.8	8.4	8.0
	4 room	20 + 20 + 20 + 20	1.73	1.73	1.73	1.73	4.4	6.9	8.3	890	1750	2750	8.0	7.7	7.4
		20 + 20 + 20 + 25	1.62	1.62	1.62	2.03	4.4	6.9	8.3	890	1750	2750	8.0	7.7	7.4
		20 + 20 + 20 + 35	1.49	1.49	1.49	2.62	4.4	7.1	8.3	890	1790	2750	8.2	7.9	7.5
		20 + 20 + 20 + 50	1.29	1.29	1.29	3.23	4.4	7.1	8.3	890	1790	2750	8.2	7.9	7.5

Indoor unit combination			Cooling capacity (kW)							Power consumption (W)			Standard current (A)		
			Room cooling capacity (kW)				Total capacity (kW)								
			A room	B room	C room	D room	Min.	Standard	Max.	Min.	Standard	Max.	220V	230V	240V
Cooling operation	4 room	20 + 20 + 20 + 60	1.18	1.18	1.18	3.55	4.4	7.1	8.3	890	1790	2750	8.2	7.9	7.5
		20 + 20 + 25 + 25	1.53	1.53	1.92	1.92	4.4	6.9	8.3	890	1750	2750	8.0	7.7	7.4
		20 + 20 + 25 + 35	1.42	1.42	1.78	2.49	4.4	7.1	8.3	890	1790	2750	8.2	7.9	7.5
		20 + 20 + 25 + 50	1.23	1.23	1.54	3.09	4.4	7.1	8.3	890	1790	2750	8.2	7.9	7.5
		20 + 20 + 25 + 60	1.14	1.14	1.42	3.41	4.4	7.1	8.3	890	1790	2750	8.2	7.9	7.5
		20 + 20 + 35 + 35	1.29	1.29	2.27	2.27	4.4	7.1	8.3	890	1790	2750	8.2	7.9	7.5
		20 + 20 + 35 + 50	1.14	1.14	1.99	2.84	4.4	7.1	8.3	890	1790	2750	8.2	7.9	7.5
		20 + 25 + 25 + 25	1.49	1.87	1.87	1.87	4.4	7.1	8.3	890	1790	2750	8.2	7.9	7.5
		20 + 25 + 25 + 35	1.35	1.69	1.69	2.37	4.4	7.1	8.3	890	1790	2750	8.2	7.9	7.5
		20 + 25 + 25 + 50	1.18	1.48	1.48	2.96	4.4	7.1	8.3	890	1790	2750	8.2	7.9	7.5
		20 + 25 + 35 + 35	1.23	1.54	2.16	2.16	4.4	7.1	8.3	890	1790	2750	8.2	7.9	7.5
		20 + 35 + 35 + 35	1.14	1.99	1.99	1.99	4.4	7.1	8.3	890	1790	2750	8.2	7.9	7.5
		25 + 25 + 25 + 25	1.78	1.78	1.78	1.78	4.4	7.1	8.3	890	1790	2750	8.2	7.9	7.5
		25 + 25 + 25 + 35	1.61	1.61	1.61	2.27	4.4	7.1	8.3	890	1790	2750	8.2	7.9	7.5
		25 + 25 + 25 + 50	1.42	1.42	1.42	2.84	4.4	7.1	8.3	890	1790	2750	8.2	7.9	7.5
		25 + 25 + 35 + 35	1.48	1.48	2.07	2.07	4.4	7.1	8.3	890	1790	2750	8.2	7.9	7.5

SCM80ZM-S Table of Indoor unit combination with SRK-ZMX-S type only

Indoor unit combination			Heating capacity (kW)							Power consumption (W)			Standard current (A)		
			Room heating capacity (kW)				Total capacity (kW)								
			A room	B room	C room	D room	Min.	Standard	Max.	Min.	Standard	Max.	220V	230V	240V
Heating operation	1 room	20	3.0	—	—	—	1.5	3.0	3.7	600	840	1330	3.9	3.7	3.5
		25	3.4	—	—	—	1.5	3.4	4.2	600	1000	1510	4.6	4.4	4.2
		35	4.5	—	—	—	1.5	4.5	5.0	600	1330	1790	6.1	5.8	5.6
		50	5.8	—	—	—	1.5	5.8	6.5	600	1780	2310	8.2	7.8	7.5
		60	6.8	—	—	—	1.5	6.8	7.5	600	2100	2660	9.6	9.2	8.8
	2 room	20 + 20	2.70	2.70	—	—	2.1	5.4	7.4	630	1340	1870	6.2	5.9	5.6
		20 + 25	2.62	3.28	—	—	2.1	5.9	7.7	630	1530	2130	7.0	6.7	6.4
		20 + 35	2.51	4.39	—	—	2.1	6.9	8.3	630	1910	2650	8.8	8.4	8.0
		20 + 50	2.37	5.93	—	—	2.1	8.3	8.8	630	2460	3430	11.3	10.8	10.4
		20 + 60	2.08	6.23	—	—	2.1	8.3	8.8	630	2460	3430	11.3	10.8	10.4
		25 + 25	3.20	3.20	—	—	2.1	6.4	8.1	630	1700	2480	7.8	7.5	7.2
		25 + 35	3.08	4.32	—	—	2.1	7.4	8.6	630	2090	2910	9.6	9.2	8.8
		25 + 50	2.77	5.53	—	—	2.1	8.3	8.8	630	2460	3430	11.3	10.8	10.4
		25 + 60	2.44	5.86	—	—	2.1	8.3	8.8	630	2460	3430	11.3	10.8	10.4
		35 + 35	4.15	4.15	—	—	2.1	8.3	8.8	630	2460	3430	11.3	10.8	10.4
		35 + 50	3.42	4.88	—	—	2.1	8.3	8.8	630	2460	3430	11.3	10.8	10.4
		35 + 60	3.06	5.24	—	—	2.1	8.3	8.8	630	2460	3430	11.3	10.8	10.4
		50 + 50	4.15	4.15	—	—	2.1	8.3	8.8	630	2460	3430	11.3	10.8	10.4
		50 + 60	3.77	4.53	—	—	2.1	8.3	8.8	630	2460	3430	11.3	10.8	10.4
		60 + 60	4.15	4.15	—	—	2.1	8.3	8.8	630	2460	3430	11.3	10.8	10.4
	3 room	20 + 20 + 20	2.57	2.57	2.57	—	3.2	7.7	9.3	660	1830	3430	8.4	8.0	7.7
		20 + 20 + 25	2.46	2.46	3.08	—	3.2	8.0	9.3	660	1930	3430	8.9	8.5	8.1
		20 + 20 + 35	2.27	2.27	3.97	—	3.2	8.5	9.3	660	2090	3430	9.6	9.2	8.8
		20 + 20 + 50	2.00	2.00	5.00	—	3.2	9.0	9.3	660	2250	3430	10.3	9.9	9.5
		20 + 20 + 60	1.80	1.80	5.40	—	3.2	9.0	9.3	660	2250	3430	10.3	9.9	9.5
		20 + 25 + 25	2.34	2.93	2.93	—	3.2	8.2	9.3	660	1990	3430	9.1	8.7	8.4
		20 + 25 + 35	2.20	2.75	3.85	—	3.2	8.8	9.3	660	2180	3430	10.0	9.6	9.2
		20 + 25 + 50	1.89	2.37	4.74	—	3.2	9.0	9.3	660	2250	3430	10.3	9.9	9.5
		20 + 25 + 60	1.71	2.14	5.14	—	3.2	9.0	9.3	660	2250	3430	10.3	9.9	9.5
		20 + 35 + 35	2.00	3.50	3.50	—	3.2	9.0	9.3	660	2250	3430	10.3	9.9	9.5
		20 + 35 + 50	1.71	3.00	4.29	—	3.2	9.0	9.3	660	2250	3430	10.3	9.9	9.5
		20 + 35 + 60	1.57	2.74	4.70	—	3.2	9.0	9.3	660	2250	3430	10.3	9.9	9.5
		20 + 50 + 50	1.50	3.75	3.75	—	3.2	9.0	9.3	660	2250	3430	10.3	9.9	9.5
		20 + 50 + 60	1.38	3.46	4.15	—	3.2	9.0	9.3	660	2250	3430	10.3	9.9	9.5
		25 + 25 + 25	2.83	2.83	2.83	—	3.2	8.5	9.3	660	2090	3430	9.6	9.2	8.8
		25 + 25 + 35	2.65	2.65	3.71	—	3.2	9.0	9.3	660	2250	3430	10.3	9.9	9.5
		25 + 25 + 50	2.25	2.25	4.50	—	3.2	9.0	9.3	660	2250	3430	10.3	9.9	9.5
		25 + 25 + 60	2.05	2.05	4.91	—	3.2	9.0	9.3	660	2250	3430	10.3	9.9	9.5
		25 + 35 + 35	2.37	3.32	3.32	—	3.2	9.0	9.3	660	2250	3430	10.3	9.9	9.5
		25 + 35 + 50	2.05	2.86	4.09	—	3.2	9.0	9.3	660	2250	3430	10.3	9.9	9.5
		25 + 35 + 60	1.88	2.63	4.50	—	3.2	9.0	9.3	660	2250	3430	10.3	9.9	9.5
		25 + 50 + 50	1.80	3.60	3.60	—	3.2	9.0	9.3	660	2250	3430	10.3	9.9	9.5
		25 + 50 + 60	1.67	3.33	4.00	—	3.2	9.0	9.3	660	2250	3430	10.3	9.9	9.5
		35 + 35 + 35	3.00	3.00	3.00	—	3.2	9.0	9.3	660	2250	3430	10.3	9.9	9.5
		35 + 35 + 50	2.63	2.63	3.75	—	3.2	9.0	9.3	660	2250	3430	10.3	9.9	9.5
		35 + 35 + 60	2.42	2.42	4.15	—	3.2	9.0	9.3	660	2250	3430	10.3	9.9	9.5
		35 + 50 + 50	2.33	3.33	3.33	—	3.2	9.0	9.3	660	2250	3430	10.3	9.9	9.5
	4 room	20 + 20 + 20 + 20	2.28	2.28	2.28	2.28	3.6	9.1	9.8	800	2220	3430	10.2	9.7	9.3
		20 + 20 + 20 + 25	2.14	2.14	2.14	2.68	3.6	9.1	9.8	800	2220	3430	10.2	9.7	9.3
		20 + 20 + 20 + 35	1.94	1.94	1.94	3.39	3.6	9.2	9.8	800	2240	3430	10.3	9.8	9.4
		20 + 20 + 20 + 50	1.67	1.67	1.67	4.18	3.6	9.2	9.8	800	2240	3430	10.3	9.8	9.4
		20 + 20 + 20 + 60	1.55	1.55	1.55	4.65	3.6	9.3	9.8	800	2260	3430	10.4	10.0	9.5
		20 + 20 + 25 + 25	2.04	2.04	2.56	2.56	3.6	9.2	9.8	800	2240	3430	10.3	9.8	9.4
		20 + 20 + 25 + 35	1.84	1.84	2.30	3.22	3.6	9.2	9.8	800	2240	3430	10.3	9.8	9.4
		20 + 20 + 25 + 50	1.62	1.62	2.02	4.04	3.6	9.3	9.8	800	2260	3430	10.4	10.0	9.5
		20 + 20 + 25 + 60	1.49	1.49	1.86	4.46	3.6	9.3	9.8	800	2260	3430	10.4	10.0	9.5
		20 + 20 + 35 + 35	1.67	1.67	2.93	2.93	3.6	9.2	9.8	800	2240	3430	10.3	9.8	9.4
		20 + 20 + 35 + 50	1.49	1.49	2.60	3.72	3.6	9.3	9.8	800	2260	3430	10.4	10.0	9.5
		20 + 20 + 35 + 60	1.38	1.38	2.41	4.13	3.6	9.3	9.8	800	2260	3430	10.4	10.0	9.5
		20 + 25 + 25 + 25	1.94	2.42	2.42	2.42	3.6	9.2	9.8	800	2240	3430	10.3	9.8	9.4
		20 + 25 + 25 + 35	1.75	2.19	2.19	3.07	3.6	9.2	9.8	800	2240	3430	10.3	9.8	9.4
		20 + 25 + 25 + 50	1.55	1.94	1.94	3.88	3.6	9.3	9.8	800	2260	3430	10.4	10.0	9.5
		20 + 25 + 25 + 60	1.43	1.79	1.79	4.29	3.6	9.3	9.8	800	2260	3430	10.4	10.0	9.5
		20 + 25 + 35 + 35	1.62	2.02	2.83	2.83	3.6	9.3	9.8	800	2260	3430	10.4	10.0	9.5
		20 + 25 + 35 + 50	1.43	1.79	2.50	3.58	3.6	9.3	9.8	800	2260	3430	10.4	10.0	9.5
		20 + 35 + 35 + 35	1.49	2.60	2.60	2.60	3.6	9.3	9.8	800	2260	3430	10.4	10.0	9.5
		25 + 25 + 25 + 25	2.30	2.30	2.30	2.30	3.6	9.2	9.8	800	2240	3430	10.3	9.8	9.4
		25 + 25 + 25 + 35	2.09	2.09	2.09	2.93	3.6	9.2	9.8	800	2240	3430	10.3	9.8	9.4
		25 + 25 + 25 + 50	1.86	1.86	1.86	3.72	3.6	9.3	9.8	800	2260	3430	10.4	10.0	9.5
		25 + 25 + 25 + 60	1.72	1.72	1.72	4.13	3.6	9.3	9.8	800	2260	3430	10.4	10.0	9.5
		25 + 25 + 35 + 35	1.94	1.94	2.71	2.71	3.6	9.3	9.8	800	2260	3430	10.4	10.0	9.5
		25 + 25 + 35 + 50	1.72	1.72	2.41	3.44	3.6	9.3	9.8	800	2260	3430	10.4	10.0	9.5
		25 + 35 + 35 + 35	1.79	2.50	2.50	2.50	3.6	9.3	9.8	800	2260	3430	10.4	10.0	9.5

Indoor unit combination			Cooling capacity (kW)							Power consumption (W)			Standard current (A)		
			Room cooling capacity (kW)				Total capacity (kW)								
			A room	B room	C room	D room	Min.	Standard	Max.	Min.	Standard	Max.	220V	230V	240V
Cooling operation	1 room	20	2.0	–	–	–	1.8	2.0	2.8	480	500	950	2.3	2.2	2.1
		25	2.5	–	–	–	1.8	2.5	3.4	480	680	1080	3.1	3.0	2.9
		35	3.5	–	–	–	1.8	3.5	3.9	480	1010	1240	4.6	4.4	4.3
		50	5.0	–	–	–	1.8	5.0	6.1	480	1530	2100	7.0	6.7	6.4
		60	6.0	–	–	–	1.8	6.0	7.0	480	1880	2700	8.6	8.3	7.9
	2 room	20 + 20	2.00	2.00	–	–	3.0	4.0	6.1	550	850	1910	3.9	3.7	3.6
		20 + 25	2.00	2.50	–	–	3.0	4.5	6.4	550	1070	2060	4.9	4.7	4.5
		20 + 35	2.00	3.50	–	–	3.0	5.5	6.9	550	1470	2320	6.7	6.5	6.2
		20 + 50	1.97	4.93	–	–	3.0	6.9	7.9	550	2070	2830	9.5	9.1	8.7
		20 + 60	1.85	5.55	–	–	3.0	7.4	7.9	550	2290	2830	10.5	10.1	9.6
		25 + 25	2.50	2.50	–	–	3.0	5.0	6.8	550	1250	2270	5.7	5.5	5.3
		25 + 35	2.46	3.44	–	–	3.0	5.9	7.2	550	1660	2470	7.6	7.3	7.0
		25 + 50	2.47	4.93	–	–	3.0	7.4	7.9	550	2290	2830	10.5	10.1	9.6
		25 + 60	2.18	5.22	–	–	3.0	7.4	7.9	550	2290	2830	10.5	10.1	9.6
		35 + 35	3.45	3.45	–	–	3.0	6.9	7.6	550	2070	2680	9.5	9.1	8.7
		35 + 50	3.05	4.35	–	–	3.0	7.4	7.9	550	2290	2830	10.5	10.1	9.6
		35 + 60	2.73	4.67	–	–	3.0	7.4	7.9	550	2290	2830	10.5	10.1	9.6
		50 + 50	3.70	3.70	–	–	3.0	7.4	7.9	550	2290	2830	10.5	10.1	9.6
		50 + 60	3.36	4.04	–	–	3.0	7.4	7.9	550	2290	2830	10.5	10.1	9.6
		60 + 60	3.70	3.70	–	–	3.0	7.4	7.9	550	2290	2830	10.5	10.1	9.6
	3 room	20 + 20 + 20	2.00	2.00	2.00	–	3.7	6.0	8.5	670	1380	2830	6.3	6.1	5.8
		20 + 20 + 25	2.00	2.00	2.50	–	3.7	6.5	8.5	670	1560	2830	7.2	6.9	6.6
		20 + 20 + 35	1.89	1.89	3.31	–	3.7	7.1	8.5	670	1880	2830	8.6	8.3	7.9
		20 + 20 + 50	1.73	1.73	4.33	–	3.7	7.8	8.5	670	2230	2830	10.2	9.8	9.4
		20 + 20 + 60	1.56	1.56	4.68	–	3.7	7.8	8.5	670	2230	2830	10.2	9.8	9.4
		20 + 25 + 25	1.94	2.43	2.43	–	3.7	6.8	8.5	670	1740	2830	8.0	7.6	7.3
		20 + 25 + 35	1.88	2.34	3.28	–	3.7	7.5	8.5	670	2050	2830	9.4	9.0	8.6
		20 + 25 + 50	1.64	2.05	4.11	–	3.7	7.8	8.5	670	2230	2830	10.2	9.8	9.4
		20 + 25 + 60	1.49	1.86	4.46	–	3.7	7.8	8.5	670	2230	2830	10.2	9.8	9.4
		20 + 35 + 35	1.73	3.03	3.03	–	3.7	7.8	8.5	670	2230	2830	10.2	9.8	9.4
		20 + 35 + 50	1.49	2.60	3.71	–	3.7	7.8	8.5	670	2230	2830	10.2	9.8	9.4
		20 + 35 + 60	1.36	2.37	4.07	–	3.7	7.8	8.5	670	2230	2830	10.2	9.8	9.4
		20 + 50 + 50	1.30	3.25	3.25	–	3.7	7.8	8.5	670	2230	2830	10.2	9.8	9.4
		20 + 50 + 60	1.20	3.00	3.60	–	3.7	7.8	8.5	670	2230	2830	10.2	9.8	9.4
		25 + 25 + 25	2.37	2.37	2.37	–	3.7	7.1	8.5	670	1880	2830	8.6	8.3	7.9
		25 + 25 + 35	2.29	2.29	3.21	–	3.7	7.8	8.5	670	2230	2830	10.2	9.8	9.4
		25 + 25 + 50	1.95	1.95	3.90	–	3.7	7.8	8.5	670	2230	2830	10.2	9.8	9.4
		25 + 25 + 60	1.77	1.77	4.25	–	3.7	7.8	8.5	670	2230	2830	10.2	9.8	9.4
		25 + 35 + 35	2.05	2.87	2.87	–	3.7	7.8	8.5	670	2230	2830	10.2	9.8	9.4
		25 + 35 + 50	1.77	2.48	3.55	–	3.7	7.8	8.5	670	2230	2830	10.2	9.8	9.4
		25 + 35 + 60	1.63	2.28	3.90	–	3.7	7.8	8.5	670	2230	2830	10.2	9.8	9.4
		25 + 50 + 50	1.56	3.12	3.12	–	3.7	7.8	8.5	670	2230	2830	10.2	9.8	9.4
		25 + 50 + 60	1.44	2.89	3.47	–	3.7	7.8	8.5	670	2230	2830	10.2	9.8	9.4
		35 + 35 + 35	2.60	2.60	2.60	–	3.7	7.8	8.5	670	2230	2830	10.2	9.8	9.4
		35 + 35 + 50	2.28	2.28	3.25	–	3.7	7.8	8.5	670	2230	2830	10.2	9.8	9.4
		35 + 35 + 60	2.10	2.10	3.60	–	3.7	7.8	8.5	670	2230	2830	10.2	9.8	9.4
		35 + 50 + 50	2.02	2.89	2.89	–	3.7	7.8	8.5	670	2230	2830	10.2	9.8	9.4
	4 room	20 + 20 + 20 + 20	1.95	1.95	1.95	1.95	4.4	7.8	9.2	890	2120	2830	9.6	9.2	8.8
		20 + 20 + 20 + 25	1.84	1.84	1.84	2.29	4.4	7.8	9.2	890	2120	2830	9.6	9.2	8.8
		20 + 20 + 20 + 35	1.66	1.66	1.66	2.91	4.4	7.9	9.2	890	2140	2830	9.7	9.3	8.9
		20 + 20 + 20 + 50	1.44	1.44	1.44	3.59	4.4	7.9	9.2	890	2140	2830	9.7	9.3	8.9
		20 + 20 + 20 + 60	1.33	1.33	1.33	4.00	4.4	8.0	9.2	890	2160	2830	9.9	9.4	9.0
		20 + 20 + 25 + 25	1.76	1.76	2.19	2.19	4.4	7.9	9.2	890	2140	2830	9.7	9.3	8.9
		20 + 20 + 25 + 35	1.58	1.58	1.98	2.77	4.4	7.9	9.2	890	2140	2830	9.7	9.3	8.9
		20 + 20 + 25 + 50	1.37	1.37	1.72	3.43	4.4	7.9	9.2	890	2140	2830	9.7	9.3	8.9
		20 + 20 + 25 + 60	1.28	1.28	1.60	3.84	4.4	8.0	9.2	890	2160	2830	9.9	9.4	9.0
		20 + 20 + 35 + 35	1.44	1.44	2.51	2.51	4.4	7.9	9.2	890	2140	2830	9.7	9.3	8.9
		20 + 20 + 35 + 50	1.28	1.28	2.24	3.20	4.4	8.0	9.2	890	2160	2830	9.9	9.4	9.0
		20 + 20 + 35 + 60	1.19	1.19	2.07	3.56	4.4	8.0	9.2	890	2160	2830	9.9	9.4	9.0
		20 + 25 + 25 + 25	1.66	2.08	2.08	2.08	4.4	7.9	9.2	890	2140	2830	9.7	9.3	8.9
		20 + 25 + 25 + 35	1.50	1.88	1.88	2.63	4.4	7.9	9.2	890	2140	2830	9.7	9.3	8.9
		20 + 25 + 25 + 50	1.33	1.67	1.67	3.33	4.4	8.0	9.2	890	2160	2830	9.9	9.4	9.0
		20 + 25 + 25 + 60	1.23	1.54	1.54	3.69	4.4	8.0	9.2	890	2160	2830	9.9	9.4	9.0
		20 + 25 + 35 + 35	1.37	1.72	2.40	2.40	4.4	7.9	9.2	890	2140	2830	9.7	9.3	8.9
		20 + 25 + 35 + 50	1.23	1.54	2.15	3.08	4.4	8.0	9.2	890	2160	2830	9.9	9.4	9.0
		20 + 35 + 35 + 35	1.28	2.24	2.24	2.24	4.4	8.0	9.2	890	2160	2830	9.9	9.4	9.0
		25 + 25 + 25 + 25	1.98	1.98	1.98	1.98	4.4	7.9	9.2	890	2140	2830	9.7	9.3	8.9
		25 + 25 + 25 + 35	1.80	1.80	1.80	2.51	4.4	7.9	9.2	890	2140	2830	9.7	9.3	8.9
		25 + 25 + 25 + 50	1.60	1.60	1.60	3.20	4.4	8.0	9.2	890	2160	2830	9.9	9.4	9.0
		25 + 25 + 25 + 60	1.48	1.48	1.48	3.56	4.4	8.0	9.2	890	2160	2830	9.9	9.4	9.0
		25 + 25 + 35 + 35	1.67	1.67	2.33	2.33	4.4	8.0	9.2	890	2160	2830	9.9	9.4	9.0
		25 + 25 + 35 + 50	1.48	1.48	2.07	2.96	4.4	8.0	9.2	890	2160	2830	9.9	9.4	9.0
		25 + 35 + 35 + 35	1.54	2.15	2.15	2.15	4.4	8.0	9.2	890	2160	2830	9.9	9.4	9.0

SCM80ZM-S Table of Indoor unit combination not with SRK-ZMX-S type only

Indoor unit combination			Heating capacity (kW)							Power consumption (W)			Standard current (A)		
			Room heating capacity (kW)				Total capacity (kW)								
			A room	B room	C room	D room	Min.	Standard	Max.	Min.	Standard	Max.	220V	230V	240V
Heating operation	1 room	20	3.0	–	–	–	1.5	3.0	3.5	600	1060	1330	4.9	4.7	4.5
		25	3.4	–	–	–	1.5	3.4	4.0	600	1220	1510	5.6	5.4	5.1
		35	4.5	–	–	–	1.5	4.5	4.8	600	1510	1790	6.9	6.6	6.4
		50	5.8	–	–	–	1.5	5.8	6.2	600	1950	2310	9.0	8.6	8.2
		60	6.8	–	–	–	1.5	6.8	7.1	600	2240	2660	10.3	9.8	9.4
	2 room	20 + 20	2.70	2.70	–	–	2.1	5.4	7.0	630	1370	1870	6.3	6.0	5.8
		20 + 25	2.62	3.28	–	–	2.1	5.9	7.3	630	1560	2130	7.2	6.9	6.6
		20 + 35	2.51	4.39	–	–	2.1	6.9	7.9	630	1950	2650	9.0	8.6	8.2
		20 + 50	2.37	5.93	–	–	2.1	8.3	8.4	630	2510	3430	11.5	11.0	10.6
		20 + 60	2.08	6.23	–	–	2.1	8.3	8.4	630	2510	3430	11.5	11.0	10.6
		25 + 25	3.20	3.20	–	–	2.1	6.4	7.7	630	1740	2480	8.0	7.6	7.3
		25 + 35	3.08	4.32	–	–	2.1	7.4	8.2	630	2130	2910	9.8	9.4	9.0
		25 + 50	2.77	5.53	–	–	2.1	8.3	8.4	630	2510	3430	11.5	11.0	10.6
		25 + 60	2.44	5.86	–	–	2.1	8.3	8.4	630	2510	3430	11.5	11.0	10.6
		35 + 35	4.15	4.15	–	–	2.1	8.3	8.4	630	2510	3430	11.5	11.0	10.6
		35 + 50	3.42	4.88	–	–	2.1	8.3	8.4	630	2510	3430	11.5	11.0	10.6

Heating operation

Indoor unit combination		Heating capacity (kW)							Power consumption (W)			Standard current (A)		
		Room heating capacity (kW)				Total capacity (kW)								
		A room	B room	C room	D room	Min.	Standard	Max.	Min.	Standard	Max.	220V	230V	240V
2 room	35 + 60	3.06	5.24	—	—	2.1	8.3	8.4	630	2510	3430	11.5	11.0	10.6
	50 + 50	4.15	4.15	—	—	2.1	8.3	8.4	630	2510	3430	11.5	11.0	10.6
	50 + 60	3.77	4.53	—	—	2.1	8.3	8.4	630	2510	3430	11.5	11.0	10.6
	60 + 60	4.15	4.15	—	—	2.1	8.3	8.4	630	2510	3430	11.5	11.0	10.6
3 room	20 + 20 + 20	2.57	2.57	2.57	—	3.2	7.7	9.1	660	1870	3430	8.6	8.2	7.9
	20 + 20 + 25	2.46	2.46	3.08	—	3.2	8.0	9.1	660	1970	3430	9.0	8.7	8.3
	20 + 20 + 35	2.27	2.27	3.97	—	3.2	8.5	9.1	660	2130	3430	9.8	9.4	9.0
	20 + 20 + 50	2.00	2.00	5.00	—	3.2	9.0	9.1	660	2300	3430	10.6	10.1	9.7
	20 + 20 + 60	1.80	1.80	5.40	—	3.2	9.0	9.1	660	2300	3430	10.6	10.1	9.7
	20 + 25 + 25	2.34	2.93	2.93	—	3.2	8.2	9.1	660	2030	3430	9.3	8.9	8.5
	20 + 25 + 35	2.20	2.75	3.85	—	3.2	8.8	9.1	660	2220	3430	10.2	9.7	9.3
	20 + 25 + 50	1.89	2.37	4.74	—	3.2	9.0	9.1	660	2300	3430	10.6	10.1	9.7
	20 + 25 + 60	1.71	2.14	5.14	—	3.2	9.0	9.1	660	2300	3430	10.6	10.1	9.7
	20 + 35 + 35	2.00	3.50	3.50	—	3.2	9.0	9.1	660	2300	3430	10.6	10.1	9.7
	20 + 35 + 50	1.71	3.00	4.29	—	3.2	9.0	9.1	660	2300	3430	10.6	10.1	9.7
	20 + 35 + 60	1.57	2.74	4.70	—	3.2	9.0	9.1	660	2300	3430	10.6	10.1	9.7
	20 + 50 + 50	1.50	3.75	3.75	—	3.2	9.0	9.1	660	2300	3430	10.6	10.1	9.7
	20 + 50 + 60	1.38	3.46	4.15	—	3.2	9.0	9.1	660	2300	3430	10.6	10.1	9.7
	25 + 25 + 25	2.83	2.83	2.83	—	3.2	8.5	9.1	660	2130	3430	9.8	9.4	9.0
	25 + 25 + 35	2.65	2.65	3.71	—	3.2	9.0	9.1	660	2300	3430	10.6	10.1	9.7
	25 + 25 + 50	2.25	2.25	4.50	—	3.2	9.0	9.1	660	2300	3430	10.6	10.1	9.7
	25 + 25 + 60	2.05	2.05	4.91	—	3.2	9.0	9.1	660	2300	3430	10.6	10.1	9.7
	25 + 35 + 35	2.37	3.32	3.32	—	3.2	9.0	9.1	660	2300	3430	10.6	10.1	9.7
	25 + 35 + 50	2.05	2.86	4.09	—	3.2	9.0	9.1	660	2300	3430	10.6	10.1	9.7
	25 + 35 + 60	1.88	2.63	4.50	—	3.2	9.0	9.1	660	2300	3430	10.6	10.1	9.7
	25 + 50 + 50	1.80	3.60	3.60	—	3.2	9.0	9.1	660	2300	3430	10.6	10.1	9.7
	25 + 50 + 60	1.67	3.33	4.00	—	3.2	9.0	9.1	660	2300	3430	10.6	10.1	9.7
	35 + 35 + 35	3.00	3.00	3.00	—	3.2	9.0	9.1	660	2300	3430	10.6	10.1	9.7
	35 + 35 + 50	2.63	2.63	3.75	—	3.2	9.0	9.1	660	2300	3430	10.6	10.1	9.7
	35 + 35 + 60	2.42	2.42	4.15	—	3.2	9.0	9.1	660	2300	3430	10.6	10.1	9.7
	35 + 50 + 50	2.33	3.33	3.33	—	3.2	9.0	9.1	660	2300	3430	10.6	10.1	9.7
4 room	20 + 20 + 20 + 20	2.28	2.28	2.28	2.28	3.6	9.1	9.5	800	2270	3430	10.4	10.0	9.6
	20 + 20 + 20 + 25	2.14	2.14	2.14	2.68	3.6	9.1	9.5	800	2270	3430	10.4	10.0	9.6
	20 + 20 + 20 + 35	1.94	1.94	1.94	3.39	3.6	9.2	9.5	800	2290	3430	10.5	10.1	9.6
	20 + 20 + 20 + 50	1.67	1.67	1.67	4.18	3.6	9.2	9.5	800	2290	3430	10.5	10.1	9.6
	20 + 20 + 20 + 60	1.55	1.55	1.55	4.65	3.6	9.3	9.5	800	2310	3430	10.7	10.2	9.8
	20 + 20 + 25 + 25	2.04	2.04	2.56	2.56	3.6	9.2	9.5	800	2290	3430	10.5	10.1	9.6
	20 + 20 + 25 + 35	1.84	1.84	2.30	3.22	3.6	9.2	9.5	800	2290	3430	10.5	10.1	9.6
	20 + 20 + 25 + 50	1.62	1.62	2.02	4.04	3.6	9.3	9.5	800	2310	3430	10.7	10.2	9.8
	20 + 20 + 25 + 60	1.49	1.49	1.86	4.46	3.6	9.3	9.5	800	2310	3430	10.7	10.2	9.8
	20 + 20 + 35 + 35	1.67	1.67	2.93	2.93	3.6	9.2	9.5	800	2290	3430	10.5	10.1	9.6
	20 + 20 + 35 + 50	1.49	1.49	2.60	3.72	3.6	9.3	9.5	800	2310	3430	10.7	10.2	9.8
	20 + 20 + 35 + 60	1.38	1.38	2.41	4.13	3.6	9.3	9.5	800	2310	3430	10.7	10.2	9.8
	20 + 25 + 25 + 25	1.94	2.42	2.42	2.42	3.6	9.2	9.5	800	2290	3430	10.5	10.1	9.6
	20 + 25 + 25 + 35	1.75	2.19	2.19	3.07	3.6	9.2	9.5	800	2290	3430	10.5	10.1	9.6
	20 + 25 + 25 + 50	1.55	1.94	1.94	3.88	3.6	9.3	9.5	800	2310	3430	10.7	10.2	9.8
	20 + 25 + 25 + 60	1.43	1.79	1.79	4.29	3.6	9.3	9.5	800	2310	3430	10.7	10.2	9.8
	20 + 25 + 35 + 35	1.62	2.02	2.83	2.83	3.6	9.3	9.5	800	2310	3430	10.7	10.2	9.8
	20 + 25 + 35 + 50	1.43	1.79	2.50	3.58	3.6	9.3	9.5	800	2310	3430	10.7	10.2	9.8
	20 + 35 + 35 + 35	1.49	2.60	2.60	2.60	3.6	9.3	9.5	800	2310	3430	10.7	10.2	9.8
	25 + 25 + 25 + 25	2.30	2.30	2.30	2.30	3.6	9.2	9.5	800	2290	3430	10.5	10.1	9.6
	25 + 25 + 25 + 35	2.09	2.09	2.09	2.93	3.6	9.2	9.5	800	2290	3430	10.5	10.1	9.6
	25 + 25 + 25 + 50	1.86	1.86	1.86	3.72	3.6	9.3	9.5	800	2310	3430	10.7	10.2	9.8
	25 + 25 + 25 + 60	1.72	1.72	1.72	4.13	3.6	9.3	9.5	800	2310	3430	10.7	10.2	9.8
	25 + 25 + 35 + 35	1.94	1.94	2.71	2.71	3.6	9.3	9.5	800	2310	3430	10.7	10.2	9.8
	25 + 25 + 35 + 50	1.72	1.72	2.41	3.44	3.6	9.3	9.5	800	2310	3430	10.7	10.2	9.8
	25 + 35 + 35 + 35	1.79	2.50	2.50	2.50	3.6	9.3	9.5	800	2310	3430	10.7	10.2	9.8

Cooling operation

Indoor unit combination		Cooling capacity (kW)							Power consumption (W)			Standard current (A)		
		Room cooling capacity (kW)				Total capacity (kW)								
		A room	B room	C room	D room	Min.	Standard	Max.	Min.	Standard	Max.	220V	230V	240V
1 room	20	2.0	—	—	—	1.8	2.0	2.7	480	530	950	2.4	2.3	2.2
	25	2.5	—	—	—	1.8	2.5	3.2	480	730	1080	3.4	3.2	3.1
	35	3.5	—	—	—	1.8	3.5	3.7	480	1120	1240	5.1	4.9	4.7
	50	5.0	—	—	—	1.8	5.0	5.8	480	1710	2100	7.9	7.5	7.2
	60	6.0	—	—	—	1.8	6.0	6.7	480	2140	2700	9.8	9.4	9.0
2 room	20 + 20	2.00	2.00	—	—	3.0	4.0	5.8	550	930	1910	4.3	4.1	3.9
	20 + 25	2.00	2.50	—	—	3.0	4.5	6.1	550	1170	2060	5.4	5.1	4.9
	20 + 35	2.00	3.50	—	—	3.0	5.5	6.6	550	1590	2320	7.3	7.0	6.7
	20 + 50	1.97	4.93	—	—	3.0	6.9	7.5	550	2200	2830	10.1	9.7	9.3
	20 + 60	1.85	5.55	—	—	3.0	7.4	7.5	550	2430	2830	11.2	10.7	10.2
	25 + 25	2.50	2.50	—	—	3.0	5.0	6.5	550	1360	2270	6.2	6.0	5.7
	25 + 35	2.46	3.44	—	—	3.0	5.9	6.8	550	1780	2470	8.2	7.8	7.5
	25 + 50	2.47	4.93	—	—	3.0	7.4	7.5	550	2430	2830	11.2	10.7	10.2
	25 + 60	2.18	5.22	—	—	3.0	7.4	7.5	550	2430	2830	11.2	10.7	10.2
	35 + 35	3.45	3.45	—	—	3.0	6.9	7.5	550	2200	2680	10.1	9.7	9.3
	35 + 50	3.05	4.35	—	—	3.0	7.4	7.5	550	2430	2830	11.2	10.7	10.2
	35 + 60	2.73	4.67	—	—	3.0	7.4	7.5	550	2430	2830	11.2	10.7	10.2
	50 + 50	3.70	3.70	—	—	3.0	7.4	7.5	550	2430	2830	11.2	10.7	10.2
	50 + 60	3.36	4.04	—	—	3.0	7.4	7.5	550	2430	2830	11.2	10.7	10.2
	60 + 60	3.70	3.70	—	—	3.0	7.4	7.5	550	2430	2830	11.2	10.7	10.2
3 room	20 + 20 + 20	2.00	2.00	2.00	—	3.7	6.0	8.1	670	1450	2830	6.7	6.4	6.1
	20 + 20 + 25	2.00	2.00	2.50	—	3.7	6.5	8.1	670	1630	2830	7.5	7.2	6.9
	20 + 20 + 35	1.89	1.89	3.31	—	3.7	7.1	8.1	670	1950	2830	9.0	8.6	8.2
	20 + 20 + 50	1.73	1.73	4.33	—	3.7	7.8	8.1	670	2320	2830	10.7	10.2	9.8
	20 + 20 + 60	1.56	1.56	4.68	—	3.7	7.8	8.1	670	2320	2830	10.7	10.2	9.8
	20 + 25 + 25	1.94	2.43	2.43	—	3.7	6.8	8.1	670	1820	2830	8.4	8.0	7.7
	20 + 25 + 35	1.88	2.34	3.28	—	3.7	7.5	8.1	670	2130	2830	9.8	9.4	9.0
	20 + 25 + 50	1.64	2.05	4.11	—	3.7	7.8	8.1	670	2320	2830	10.7	10.2	9.8
	20 + 25 + 60	1.49	1.86	4.46	—	3.7	7.8	8.1	670	2320	2830	10.7	10.2	9.8
	20 + 35 + 35	1.73	3.03	3.03	—	3.7	7.8	8.1	670	2320	2830	10.7	10.2	9.8
	20 + 35 + 50	1.49	2.60	3.71	—	3.7	7.8	8.1	670	2320	2830	10.7	10.2	9.8
	20 + 35 + 60	1.36	2.37	4.07	—	3.7	7.8	8.1	670	2320	2830	10.7	10.2	9.8
	20 + 50 + 50	1.30	3.25	3.25	—	3.7	7.8	8.1	670	2320	2830	10.7	10.2	9.8
	20 + 50 + 60	1.20	3.00	3.60	—	3.7	7.8	8.1	670	2320	2830	10.7	10.2	9.8
	25 + 25 + 25	2.37	2.37	2.37	—	3.7	7.1	8.1	670	1950	2830	9.0	8.6	8.2

Indoor unit combination			Cooling capacity (kW)							Power consumption (W)			Standard current (A)		
			Room cooling capacity (kW)				Total capacity (kW)								
			A room	B room	C room	D room	Min.	Standard	Max.	Min.	Standard	Max.	220V	230V	240V
Cooling operation	3 room	25 + 25 + 35	2.29	2.29	3.21	—	3.7	7.8	8.1	670	2320	2830	10.7	10.2	9.8
		25 + 25 + 50	1.95	1.95	3.90	—	3.7	7.8	8.1	670	2320	2830	10.7	10.2	9.8
		25 + 25 + 60	1.77	1.77	4.25	—	3.7	7.8	8.1	670	2320	2830	10.7	10.2	9.8
		25 + 35 + 35	2.05	2.87	2.87	—	3.7	7.8	8.1	670	2320	2830	10.7	10.2	9.8
		25 + 35 + 50	1.77	2.48	3.55	—	3.7	7.8	8.1	670	2320	2830	10.7	10.2	9.8
		25 + 35 + 60	1.63	2.28	3.90	—	3.7	7.8	8.1	670	2320	2830	10.7	10.2	9.8
		25 + 50 + 50	1.56	3.12	3.12	—	3.7	7.8	8.1	670	2320	2830	10.7	10.2	9.8
		25 + 50 + 60	1.44	2.89	3.47	—	3.7	7.8	8.1	670	2320	2830	10.7	10.2	9.8
		35 + 35 + 35	2.60	2.60	2.60	—	3.7	7.8	8.1	670	2320	2830	10.7	10.2	9.8
		35 + 35 + 50	2.28	2.28	3.25	—	3.7	7.8	8.1	670	2320	2830	10.7	10.2	9.8
		35 + 35 + 60	2.10	2.10	3.60	—	3.7	7.8	8.1	670	2320	2830	10.7	10.2	9.8
		35 + 50 + 50	2.02	2.89	2.89	—	3.7	7.8	8.1	670	2320	2830	10.7	10.2	9.8
	4 room	20 + 20 + 20 + 20	1.95	1.95	1.95	1.95	4.4	7.8	8.7	890	2180	2830	9.9	9.5	9.1
		20 + 20 + 20 + 25	1.84	1.84	1.84	2.29	4.4	7.8	8.7	890	2180	2830	9.9	9.5	9.1
		20 + 20 + 20 + 35	1.66	1.66	1.66	2.91	4.4	7.9	8.7	890	2200	2830	10.0	9.6	9.2
		20 + 20 + 20 + 50	1.44	1.44	1.44	3.59	4.4	7.9	8.7	890	2200	2830	10.0	9.6	9.2
		20 + 20 + 20 + 60	1.33	1.33	1.33	4.00	4.4	8.0	8.7	890	2220	2830	10.1	9.7	9.3
		20 + 20 + 25 + 25	1.76	1.76	2.19	2.19	4.4	7.9	8.7	890	2200	2830	10.0	9.6	9.2
		20 + 20 + 25 + 35	1.58	1.58	1.98	2.77	4.4	7.9	8.7	890	2200	2830	10.0	9.6	9.2
		20 + 20 + 25 + 50	1.37	1.37	1.72	3.43	4.4	7.9	8.7	890	2200	2830	10.0	9.6	9.2
		20 + 20 + 25 + 60	1.28	1.28	1.60	3.84	4.4	8.0	8.7	890	2220	2830	10.1	9.7	9.3
		20 + 20 + 35 + 35	1.44	1.44	2.51	2.51	4.4	7.9	8.7	890	2200	2830	10.0	9.6	9.2
		20 + 20 + 35 + 50	1.28	1.28	2.24	3.20	4.4	8.0	8.7	890	2220	2830	10.1	9.7	9.3
		20 + 20 + 35 + 60	1.19	1.19	2.07	3.56	4.4	8.0	8.7	890	2220	2830	10.1	9.7	9.3
		20 + 25 + 25 + 25	1.66	2.08	2.08	2.08	4.4	7.9	8.7	890	2200	2830	10.0	9.6	9.2
		20 + 25 + 25 + 35	1.50	1.88	1.88	2.63	4.4	7.9	8.7	890	2200	2830	10.0	9.6	9.2
		20 + 25 + 25 + 50	1.33	1.67	1.67	3.33	4.4	8.0	8.7	890	2220	2830	10.1	9.7	9.3
		20 + 25 + 25 + 60	1.23	1.54	1.54	3.69	4.4	8.0	8.7	890	2220	2830	10.1	9.7	9.3
		20 + 25 + 35 + 35	1.37	1.72	2.40	2.40	4.4	7.9	8.7	890	2200	2830	10.0	9.6	9.2
		20 + 25 + 35 + 50	1.23	1.54	2.15	3.08	4.4	8.0	8.7	890	2220	2830	10.1	9.7	9.3
		20 + 35 + 35 + 35	1.28	2.24	2.24	2.24	4.4	8.0	8.7	890	2220	2830	10.1	9.7	9.3
		25 + 25 + 25 + 25	1.98	1.98	1.98	1.98	4.4	7.9	8.7	890	2200	2830	10.0	9.6	9.2
		25 + 25 + 25 + 35	1.80	1.80	1.80	2.51	4.4	7.9	8.7	890	2200	2830	10.0	9.6	9.2
		25 + 25 + 25 + 50	1.60	1.60	1.60	3.20	4.4	8.0	8.7	890	2220	2830	10.1	9.7	9.3
		25 + 25 + 25 + 60	1.48	1.48	1.48	3.56	4.4	8.0	8.7	890	2220	2830	10.1	9.7	9.3
		25 + 25 + 35 + 35	1.67	1.67	2.33	2.33	4.4	8.0	8.7	890	2220	2830	10.1	9.7	9.3
		25 + 25 + 35 + 50	1.48	1.48	2.07	2.96	4.4	8.0	8.7	890	2220	2830	10.1	9.7	9.3
		25 + 35 + 35 + 35	1.54	2.15	2.15	2.15	4.4	8.0	8.7	890	2220	2830	10.1	9.7	9.3

SCM100ZM-S Table of Indoor unit combination with SRK-ZMX-S type only

Indoor unit combination			Heating capacity (kW)									Power consumption (W)			Standard current (A)		
			Room heating capacity (kW)						Total capacity (kW)								
			A room	B room	C room	D room	E room	F room	Min.	Standard	Max.	Min.	Standard	Max.	220V	230V	240V
Heating operation	1 room	20	3.0	—	—	—	—	—	1.5	3.0	3.7	700	1010	1330	4.6	4.4	4.3
		25	3.4	—	—	—	—	—	1.5	3.4	4.2	700	1150	1540	5.3	5.1	4.8
		35	4.5	—	—	—	—	—	1.5	4.5	5.0	700	1540	1840	7.1	6.8	6.5
		50	5.8	—	—	—	—	—	1.5	5.8	6.5	700	2000	2410	9.2	8.8	8.4
		60	6.8	—	—	—	—	—	1.5	6.8	7.5	700	2360	2760	10.8	10.4	9.9
	2 room	20 + 20	3.00	3.00	—	—	—	—	2.1	6.0	7.4	750	1510	1460	6.9	6.6	6.4
		20 + 25	2.84	3.56	—	—	—	—	2.1	6.4	7.9	750	1630	2210	7.5	7.2	6.9
		20 + 35	2.73	4.77	—	—	—	—	2.1	7.5	8.7	750	1950	2520	9.0	8.6	8.2
		20 + 50	2.51	6.29	—	—	—	—	2.1	8.8	10.2	750	2380	3220	10.9	10.5	10.0
		20 + 60	2.45	7.35	—	—	—	—	2.1	9.8	11.2	750	2780	3620	12.8	12.2	11.7
		25 + 25	3.40	3.40	—	—	—	—	2.1	6.8	8.4	750	1740	2420	8.0	7.6	7.3
		25 + 35	3.29	4.61	—	—	—	—	2.1	7.9	9.2	750	2100	2820	9.6	9.2	8.8
		25 + 50	3.07	6.13	—	—	—	—	2.1	9.2	10.7	750	2580	3610	11.8	11.3	10.9
		25 + 60	3.00	7.20	—	—	—	—	2.1	10.2	11.7	750	2980	3790	13.7	13.1	12.5
		35 + 35	4.50	4.50	—	—	—	—	2.1	9.0	10.0	750	2470	3210	11.3	10.8	10.4
		35 + 50	4.24	6.06	—	—	—	—	2.1	10.3	11.5	750	2980	3710	13.7	13.1	12.5
		35 + 60	4.16	7.14	—	—	—	—	2.1	11.3	12.5	750	3430	4100	15.7	15.1	14.4
		50 + 50	5.80	5.80	—	—	—	—	2.1	11.6	13.0	750	3580	4320	16.4	15.7	15.1
		50 + 60	5.45	6.55	—	—	—	—	2.1	12.0	13.5	750	3720	4520	17.1	16.3	15.7
		60 + 60	6.00	6.00	—	—	—	—	2.1	12.0	13.5	750	3720	4520	17.1	16.3	15.7
	3 room	20 + 20 + 20	3.00	3.00	3.00	—	—	—	3.2	9.0	11.1	780	2230	3350	10.2	9.8	9.4
		20 + 20 + 25	2.89	2.89	3.62	—	—	—	3.2	9.4	11.6	780	2350	3550	10.8	10.3	9.9
		20 + 20 + 35	2.80	2.80	4.90	—	—	—	3.2	10.5	12.4	780	2710	3820	12.4	11.9	11.4
		20 + 20 + 50	2.62	2.62	6.56	—	—	—	3.2	11.8	13.5	780	3210	4190	14.7	14.1	13.5
		20 + 20 + 60	2.40	2.40	7.20	—	—	—	3.2	12.0	13.5	780	3350	4190	15.4	14.7	14.1
		20 + 25 + 25	2.80	3.50	3.50	—	—	—	3.2	9.8	12.1	780	2510	3720	11.5	11.0	10.6
		20 + 25 + 35	2.73	3.41	4.77	—	—	—	3.2	10.9	12.9	780	2910	3990	13.4	12.8	12.2
		20 + 25 + 50	2.53	3.16	6.32	—	—	—	3.2	12.0	13.5	780	3350	4190	15.4	14.7	14.1
		20 + 25 + 60	2.29	2.86	6.86	—	—	—	3.2	12.0	13.5	780	3350	4190	15.4	14.7	14.1
		20 + 35 + 35	2.67	4.67	4.67	—	—	—	3.2	12.0	13.5	780	3360	4190	15.4	14.8	14.1
		20 + 35 + 50	2.29	4.00	5.71	—	—	—	3.2	12.0	13.5	780	3350	4190	15.4	14.7	14.1
		20 + 35 + 60	2.09	3.65	6.26	—	—	—	3.2	12.0	13.5	780	3340	4190	15.3	14.7	14.1
		20 + 50 + 50	2.00	5.00	5.00	—	—	—	3.2	12.0	13.5	780	3340	4190	15.3	14.7	14.1
		20 + 50 + 60	1.85	4.62	5.54	—	—	—	3.2	12.0	13.5	780	3340	4190	15.3	14.7	14.1
		20 + 60 + 60	1.71	5.14	5.14	—	—	—	3.2	12.0	13.5	780	3330	4190	15.3	14.6	14.0
		25 + 25 + 25	3.40	3.40	3.40	—	—	—	3.2	10.2	12.6	780	2710	3880	12.4	11.9	11.4
		25 + 25 + 35	3.32	3.32	4.65	—	—	—	3.2	11.3	13.4	780	3110	4120	14.3	13.7	13.1
		25 + 25 + 50	3.00	3.00	6.00	—	—	—	3.2	12.0	13.5	780	3350	4190	15.4	14.7	14.1
		25 + 25 + 60	2.73	2.73	6.55	—	—	—	3.2	12.0	13.5	780	3350	4190	15.4	14.7	14.1
		25 + 35 + 35	3.16	4.42	4.42	—	—	—	3.2	12.0	13.5	780	3350	4190	15.4	14.7	14.1
		25 + 35 + 50	2.73	3.82	5.45	—	—	—	3.2	12.0	13.5	780	3350	4190	15.4	14.7	14.1
		25 + 35 + 60	2.50	3.50	6.00	—	—	—	3.2	12.0	13.5	780	3340	4190	15.3	14.7	14.1
		25 + 50 + 50	2.40	4.80	4.80	—	—	—	3.2	12.0	13.5	780	3340	4190	15.3	14.7	14.1
		25 + 50 + 60	2.22	4.44	5.33	—	—	—	3.2	12.0	13.5	780	3330	4190	15.3	14.6	14.0
		25 + 60 + 60	2.07	4.97	4.97	—	—	—	3.2	12.0	13.5	780	3330	4190	15.3	14.6	14.0
		35 + 35 + 35	4.00	4.00	4.00	—	—	—	3.2	12.0	13.5	780	3350	4190	15.4	14.7	14.1

Indoor unit combination			Heating capacity (kW)									Power consumption (W)			Standard current (A)		
			Room heating capacity (kW)						Total capacity (kW)								
			A room	B room	C room	D room	E room	F room	Min.	Standard	Max.	Min.	Standard	Max.	220V	230V	240V
Heating operation	3 room	35 + 35 + 50	3.50	3.50	5.00	—	—	—	3.2	12.0	13.5	780	3340	4190	15.3	14.7	14.1
		35 + 35 + 60	3.23	3.23	5.54	—	—	—	3.2	12.0	13.5	780	3340	4190	15.3	14.7	14.1
		35 + 50 + 50	3.11	4.44	4.44	—	—	—	3.2	12.0	13.5	780	3330	4190	15.3	14.6	14.0
		35 + 50 + 60	2.90	4.14	4.97	—	—	—	3.2	12.0	13.5	780	3330	4190	15.3	14.6	14.0
		35 + 60 + 60	2.71	4.65	4.65	—	—	—	3.2	12.0	13.5	780	3320	4190	15.2	14.6	14.0
		50 + 50 + 50	4.00	4.00	4.00	—	—	—	3.2	12.0	13.5	780	3330	4190	15.3	14.6	14.0
		50 + 50 + 60	3.75	3.75	4.50	—	—	—	3.2	12.0	13.5	780	3320	4190	15.2	14.6	14.0
	4 room	20 + 20 + 20 + 20	3.00	3.00	3.00	3.00	—	—	3.6	12.0	13.5	950	3230	3840	14.7	14.1	13.5
		20 + 20 + 20 + 25	2.82	2.82	2.82	3.53	—	—	3.6	12.0	13.5	950	3230	3840	14.7	14.1	13.5
		20 + 20 + 20 + 35	2.53	2.53	2.53	4.42	—	—	3.6	12.0	13.5	950	3230	3840	14.7	14.1	13.5
		20 + 20 + 20 + 50	2.18	2.18	2.18	5.45	—	—	3.6	12.0	13.5	950	3220	3840	14.7	14.0	13.4
		20 + 20 + 20 + 60	2.00	2.00	2.00	6.00	—	—	3.6	12.0	13.5	950	3220	3840	14.7	14.0	13.4
		20 + 20 + 25 + 25	2.67	2.67	3.33	3.33	—	—	3.6	12.0	13.5	950	3230	3840	14.7	14.1	13.5
		20 + 20 + 25 + 35	2.40	2.40	3.00	4.20	—	—	3.6	12.0	13.5	950	3220	3840	14.7	14.0	13.4
		20 + 20 + 25 + 50	2.09	2.09	2.61	5.22	—	—	3.6	12.0	13.5	950	3220	3840	14.7	14.0	13.4
		20 + 20 + 25 + 60	1.92	1.92	2.40	5.76	—	—	3.6	12.0	13.5	950	3340	3840	15.2	14.5	13.9
		20 + 20 + 35 + 35	2.18	2.18	3.82	3.82	—	—	3.6	12.0	13.5	950	3220	3840	14.7	14.0	13.4
		20 + 20 + 35 + 50	1.92	1.92	3.36	4.80	—	—	3.6	12.0	13.5	950	3340	3840	15.2	14.5	13.9
		20 + 20 + 35 + 60	1.78	1.78	3.11	5.33	—	—	3.6	12.0	13.5	950	3210	3840	14.6	14.0	13.4
		20 + 20 + 50 + 50	1.71	1.71	4.29	4.29	—	—	3.6	12.0	13.5	950	3210	3840	14.6	14.0	13.4
		20 + 20 + 50 + 60	1.60	1.60	4.00	4.80	—	—	3.6	12.0	13.5	950	3210	3840	14.6	14.0	13.4
		20 + 20 + 60 + 60	1.50	1.50	4.50	4.50	—	—	3.6	12.0	13.5	950	3200	3840	14.6	13.9	13.3
		20 + 25 + 25 + 25	2.53	3.16	3.16	3.16	—	—	3.6	12.0	13.5	950	3230	3840	14.7	14.1	13.5
		20 + 25 + 25 + 35	2.29	2.86	2.86	4.00	—	—	3.6	12.0	13.5	950	3220	3840	14.7	14.0	13.4
		20 + 25 + 25 + 50	2.00	2.50	2.50	5.00	—	—	3.6	12.0	13.5	950	3220	3840	14.7	14.0	13.4
		20 + 25 + 25 + 60	1.85	2.31	2.31	5.54	—	—	3.6	12.0	13.5	950	3340	3840	15.2	14.5	13.9
		20 + 25 + 35 + 35	2.09	2.61	3.65	3.65	—	—	3.6	12.0	13.5	950	3220	3840	14.7	14.0	13.4
		20 + 25 + 35 + 50	1.85	2.31	3.23	4.62	—	—	3.6	12.0	13.5	950	3340	3840	15.2	14.5	13.9
		20 + 25 + 35 + 60	1.71	2.14	3.00	5.14	—	—	3.6	12.0	13.5	950	3210	3840	14.6	14.0	13.4
		20 + 25 + 50 + 50	1.66	2.07	4.14	4.14	—	—	3.6	12.0	13.5	950	3210	3840	14.6	14.0	13.4
		20 + 25 + 50 + 60	1.55	1.94	3.87	4.65	—	—	3.6	12.0	13.5	950	3200	3840	14.6	13.9	13.3
		20 + 35 + 35 + 35	1.92	3.36	3.36	3.36	—	—	3.6	12.0	13.5	950	3340	3840	15.2	14.5	13.9
		20 + 35 + 35 + 50	1.71	3.00	3.00	4.29	—	—	3.6	12.0	13.5	950	3210	3840	14.6	14.0	13.4
		20 + 35 + 35 + 60	1.60	2.80	2.80	4.80	—	—	3.6	12.0	13.5	950	3210	3840	14.6	14.0	13.4
		20 + 35 + 50 + 50	1.55	2.71	3.87	3.87	—	—	3.6	12.0	13.5	950	3200	3840	14.6	13.9	13.3
		25 + 25 + 25 + 25	3.00	3.00	3.00	3.00	—	—	3.6	12.0	13.5	950	3220	3840	14.7	14.0	13.4
		25 + 25 + 25 + 35	2.73	2.73	2.73	3.82	—	—	3.6	12.0	13.5	950	3220	3840	14.7	14.0	13.4
		25 + 25 + 25 + 50	2.40	2.40	2.40	4.80	—	—	3.6	12.0	13.5	950	3340	3840	15.2	14.5	13.9
		25 + 25 + 25 + 60	2.22	2.22	2.22	5.33	—	—	3.6	12.0	13.5	950	3210	3840	14.6	14.0	13.4
		25 + 25 + 35 + 35	2.50	2.50	3.50	3.50	—	—	3.6	12.0	13.5	950	3220	3840	14.7	14.0	13.4
		25 + 25 + 35 + 50	2.22	2.22	3.11	4.44	—	—	3.6	12.0	13.5	950	3210	3840	14.6	14.0	13.4
		25 + 25 + 35 + 60	2.07	2.07	2.90	4.97	—	—	3.6	12.0	13.5	950	3210	3840	14.6	14.0	13.4
		25 + 25 + 50 + 50	2.00	2.00	4.00	4.00	—	—	3.6	12.0	13.5	950	3210	3840	14.6	14.0	13.4
		25 + 25 + 50 + 60	1.88	1.88	3.75	4.50	—	—	3.6	12.0	13.5	950	3200	3840	14.6	13.9	13.3
		25 + 35 + 35 + 35	2.31	3.23	3.23	3.23	—	—	3.6	12.0	13.5	950	3340	3840	15.2	14.5	13.9
		25 + 35 + 35 + 50	2.07	2.90	2.90	4.14	—	—	3.6	12.0	13.5	950	3210	3840	14.6	14.0	13.4
		25 + 35 + 35 + 60	1.94	2.71	2.71	4.65	—	—	3.6	12.0	13.5	950	3200	3840	14.6	13.9	13.3
		25 + 35 + 50 + 50	1.88	2.63	3.75	3.75	—	—	3.6	12.0	13.5	950	3200	3840	14.6	13.9	13.3
		35 + 35 + 35 + 35	3.00	3.00	3.00	3.00	—	—	3.6	12.0	13.5	950	3210	3840	14.6	14.0	13.4
		35 + 35 + 35 + 50	2.71	2.71	2.71	3.87	—	—	3.6	12.0	13.5	950	3200	3840	14.6	13.9	13.3
	5 room	20 + 20 + 20 + 20 + 20	2.40	2.40	2.40	2.40	2.40	—	4.0	12.0	13.5	1050	2930	3400	13.3	12.8	12.2
		20 + 20 + 20 + 20 + 25	2.29	2.29	2.29	2.29	2.86	—	4.0	12.0	13.5	1050	2920	3400	13.3	12.7	12.2
		20 + 20 + 20 + 20 + 35	2.09	2.09	2.09	2.09	3.65	—	4.0	12.0	13.5	1050	2920	3400	13.3	12.7	12.2
		20 + 20 + 20 + 20 + 50	1.85	1.85	1.85	1.85	4.62	—	4.0	12.0	13.5	1050	2910	3400	13.2	12.7	12.1
		20 + 20 + 20 + 20 + 60	1.71	1.71	1.71	1.71	5.14	—	4.0	12.0	13.5	1050	2910	3400	13.2	12.7	12.1
		20 + 20 + 20 + 25 + 25	2.18	2.18	2.18	2.73	2.73	—	4.0	12.0	13.5	1050	2920	3400	13.3	12.7	12.2
		20 + 20 + 20 + 25 + 35	2.00	2.00	2.00	2.50	3.50	—	4.0	12.0	13.5	1050	2920	3400	13.3	12.7	12.2
		20 + 20 + 20 + 25 + 50	1.78	1.78	1.78	2.22	4.44	—	4.0	12.0	13.5	1050	2910	3400	13.2	12.7	12.1
		20 + 20 + 20 + 25 + 60	1.66	1.66	1.66	2.07	4.97	—	4.0	12.0	13.5	1050	2910	3400	13.2	12.7	12.1
		20 + 20 + 20 + 35 + 35	1.85	1.85	1.85	3.23	3.23	—	4.0	12.0	13.5	1050	2910	3400	13.2	12.7	12.1
		20 + 20 + 20 + 35 + 50	1.66	1.66	1.66	2.90	4.14	—	4.0	12.0	13.5	1050	2910	3400	13.2	12.7	12.1
		20 + 20 + 20 + 35 + 60	1.55	1.55	1.55	2.71	4.65	—	4.0	12.0	13.5	1050	2900	3400	13.2	12.6	12.1
		20 + 20 + 20 + 50 + 50	1.50	1.50	1.50	3.75	3.75	—	4.0	12.0	13.5	1050	2900	3400	13.2	12.6	12.1
		20 + 20 + 25 + 25 + 25	2.09	2.09	2.61	2.61	2.61	—	4.0	12.0	13.5	1050	2920	3400	13.3	12.7	12.2
		20 + 20 + 25 + 25 + 35	1.92	1.92	2.40	2.40	3.36	—	4.0	12.0	13.5	1050	2910	3400	13.2	12.7	12.1
		20 + 20 + 25 + 25 + 50	1.71	1.71	2.14	2.14	4.29	—	4.0	12.0	13.5	1050	2910	3400	13.2	12.7	12.1
		20 + 20 + 25 + 25 + 60	1.60	1.60	2.00	2.00	4.80	—	4.0	12.0	13.5	1050	2910	3400	13.2	12.7	12.1
		20 + 20 + 25 + 35 + 35	1.78	1.78	2.22	3.11	3.11	—	4.0	12.0	13.5	1050	2910	3400	13.2	12.7	12.1
		20 + 20 + 25 + 35 + 50	1.60	1.60	2.00	2.80	4.00	—	4.0	12.0	13.5	1050	2910	3400	13.2	12.7	12.1
		20 + 20 + 25 + 35 + 60	1.50	1.50	1.88	2.63	4.50	—	4.0	12.0	13.5	1050	2900	3400	13.2	12.6	12.1
		20 + 20 + 35 + 35 + 35	1.66	1.66	2.90	2.90	2.90	—	4.0	12.0	13.5	1050	2910	3400	13.2	12.7	12.1
		20 + 20 + 35 + 35 + 50	1.50	1.50	2.63	2.63	3.75	—	4.0	12.0	13.5	1050	2900	3400	13.2	12.6	12.1
		20 + 25 + 25 + 25 + 25	2.00	2.50	2.50	2.50	2.50	—	4.0	12.0	13.5	1050	2920	3400	13.3	12.7	12.2
		20 + 25 + 25 + 25 + 35	1.85	2.31	2.31	2.31	3.23	—	4.0	12.0	13.5	1050	2910	3400	13.2	12.7	12.1
		20 + 25 + 25 + 25 + 50	1.66	2.07	2.07	2.07	4.14	—	4.0	12.0	13.5	1050	2910	3400	13.2	12.7	12.1
		20 + 25 + 25 + 25 + 60	1.55	1.94	1.94	1.94	4.65	—	4.0	12.0	13.5	1050	2900	3400	13.2	12.6	12.1
		20 + 25 + 25 + 35 + 35	1.71	2.14	2.14	3.00	3.00	—	4.0	12.0	13.5	1050	2910	3400	13.2	12.7	12.1
		20 + 25 + 25 + 35 + 50	1.55	1.94	1.94	2.71	3.87	—	4.0	12.0	13.5	1050	2900	3400	13.2	12.6	12.1
		20 + 25 + 35 + 35 + 35	1.60	2.00	2.80	2.80	2.80	—	4.0	12.0	13.5	1050	2910	3400	13.2	12.7	12.1
		20 + 35 + 35 + 35 + 35	1.50	2.63	2.63	2.63	2.63	—	4.0	12.0	13.5	1050	2900	3400	13.2	12.6	12.1
		25 + 25 + 25 + 25 + 25	2.40	2.40	2.40	2.40	2.40	—	4.0	12.0	13.5	1050	2910	3400	13.2	12.7	12.1
		25 + 25 + 25 + 25 + 35	2.22	2.22	2.22	2.22	3.11	—	4.0	12.0	13.5	1050	2910	3400	13.2	12.7	12.1
		25 + 25 + 25 + 25 + 50	2.00	2.00	2.00	2.00	4.00	—	4.0	12.0	13.5	1050	2910	3400	13.2	12.7	12.1
		25 + 25 + 25 + 25 + 60	1.88	1.88	1.88	1.88	4.50	—	4.0	12.0	13.5	1050	2900	3400	13.2	12.6	12.1
		25 + 25 + 25 + 35 + 35	2.07	2.07	2.07	2.90	2.90	—	4.0	12.0	13.5	1050	2910	3400	13.2	12.7	12.1
		25 + 25 + 25 + 35 + 50	1.88	1.88	1.88	2.63	3.75	—	4.0	12.0	13.5	1050	2900	3400	13.2	12.6	12.1
		25 + 25 + 35 + 35 + 35	1.94	1.94	2.71	2.71	2.71	—	4.0	12.0	13.5	1050	2900	3400	13.2	12.6	12.1

Indoor unit combination			Cooling capacity (kW)									Power consumption (W)			Standard current (A)		
			Room cooling capacity (kW)						Total capacity (kW)								
			A room	B room	C room	D room	E room	F room	Min.	Standard	Max.	Min.	Standard	Max.	220V	230V	240V
Cooling operation	1 room	20	2.0	—	—	—	—	—	1.8	2.0	2.8	650	750	1100	3.4	3.3	3.2
		25	2.5	—	—	—	—	—	1.8	2.5	3.4	650	950	1350	4.4	4.2	4.0
		35	3.5	—	—	—	—	—	1.8	3.5	3.9	650	1400	1600	6.4	6.1	5.9
		50	5.0	—	—	—	—	—	1.8	5.0	6.1	650	2000	2500	9.2	8.8	8.4
		60	6.0	—	—	—	—	—	1.8	6.0	7.0	650	2450	3000	11.2	10.8	10.3
	2 room	20 + 20	2.00	2.00	—	—	—	—	3.0	4.0	5.6	740	910	1460	4.2	4.0	3.8
		20 + 25	2.00	2.50	—	—	—	—	3.0	4.5	6.2	740	1050	1820	4.8	4.6	4.4
		20 + 35	2.00	3.50	—	—	—	—	3.0	5.5	6.7	740	1430	2020	6.6	6.3	6.0
		20 + 50	2.00	5.00	—	—	—	—	3.0	7.0	8.9	740	2180	2820	10.0	9.6	9.2
		20 + 60	2.00	6.00	—	—	—	—	3.0	8.0	9.8	740	2530	3360	11.6	11.1	10.6
		25 + 25	2.50	2.50	—	—	—	—	3.0	5.0	6.8	740	1350	2200	6.2	5.9	5.7
		25 + 35	2.50	3.50	—	—	—	—	3.0	6.0	7.3	740	1720	2320	7.9	7.6	7.2
		25 + 50	2.50	5.00	—	—	—	—	3.0	7.5	9.5	740	2350	3220	10.8	10.3	9.9
		25 + 60	2.50	6.00	—	—	—	—	3.0	8.5	9.8	740	2680	3360	12.3	11.8	11.3
		35 + 35	3.50	3.50	—	—	—	—	3.0	7.0	7.8	740	2180	2820	10.0	9.6	9.2
		35 + 50	3.50	5.00	—	—	—	—	3.0	8.5	10.0	740	2680	3620	12.3	11.8	11.3
		35 + 60	3.50	6.00	—	—	—	—	3.0	9.5	10.9	740	3120	3990	14.3	13.7	13.1
		50 + 50	5.00	5.00	—	—	—	—	3.0	10.0	12.0	740	3350	4400	15.4	14.7	14.1
		50 + 60	4.55	5.45	—	—	—	—	3.0	10.0	12.0	740	3350	4400	15.4	14.7	14.1
		60 + 60	5.00	5.00	—	—	—	—	3.0	10.0	12.0	740	3340	4400	15.3	14.7	14.1
	3 room	20 + 20 + 20	2.00	2.00	2.00	—	—	—	3.7	6.0	8.4	880	1460	2560	6.7	6.4	6.1
		20 + 20 + 25	2.00	2.00	2.50	—	—	—	3.7	6.5	9.0	880	1650	2700	7.6	7.2	6.9
		20 + 20 + 35	2.00	2.00	3.50	—	—	—	3.7	7.5	9.5	880	1980	3120	9.1	8.7	8.3
		20 + 20 + 50	2.00	2.00	5.00	—	—	—	3.7	9.0	11.7	880	2600	4120	11.9	11.4	10.9
		20 + 20 + 60	2.00	2.00	6.00	—	—	—	3.7	10.0	12.0	880	3120	4250	14.3	13.7	13.1
		20 + 25 + 25	2.00	2.50	2.50	—	—	—	3.7	7.0	9.6	880	1850	3210	8.5	8.1	7.8
		20 + 25 + 35	2.00	2.50	3.50	—	—	—	3.7	8.0	10.1	880	2320	3630	10.7	10.2	9.8
		20 + 25 + 50	2.00	2.50	5.00	—	—	—	3.7	9.5	12.0	880	2980	4250	13.7	13.1	12.5
		20 + 25 + 60	1.90	2.38	5.71	—	—	—	3.7	10.0	12.0	880	3120	4250	14.3	13.7	13.1
		20 + 35 + 35	2.00	3.50	3.50	—	—	—	3.7	9.0	10.6	880	2780	3750	12.8	12.2	11.7
		20 + 35 + 50	1.90	3.33	4.76	—	—	—	3.7	10.0	12.0	880	3120	4250	14.3	13.7	13.1
		20 + 35 + 60	1.74	3.04	5.22	—	—	—	3.7	10.0	12.0	880	3110	4250	14.3	13.7	13.1
		20 + 50 + 50	1.67	4.17	4.17	—	—	—	3.7	10.0	12.0	880	3110	4250	14.3	13.7	13.1
		20 + 50 + 60	1.54	3.85	4.62	—	—	—	3.7	10.0	12.0	880	3110	4250	14.3	13.7	13.1
		20 + 60 + 60	1.43	4.29	4.29	—	—	—	3.7	10.0	12.0	880	3100	4250	14.2	13.6	13.0
		25 + 25 + 25	2.50	2.50	2.50	—	—	—	3.7	7.5	10.2	880	2030	3640	9.3	8.9	8.5
		25 + 25 + 35	2.50	2.50	3.50	—	—	—	3.7	8.5	10.7	880	2520	3900	11.6	11.1	10.6
		25 + 25 + 50	2.50	2.50	5.00	—	—	—	3.7	10.0	12.0	880	3120	4250	14.3	13.7	13.1
		25 + 25 + 60	2.27	2.27	5.45	—	—	—	3.7	10.0	12.0	880	3120	4250	14.3	13.7	13.1
		25 + 35 + 35	2.50	3.50	3.50	—	—	—	3.7	9.5	11.2	880	2980	3990	13.7	13.1	12.5
		25 + 35 + 50	2.27	3.18	4.55	—	—	—	3.7	10.0	12.0	880	3120	4250	14.3	13.7	13.1
		25 + 35 + 60	2.08	2.92	5.00	—	—	—	3.7	10.0	12.0	880	3110	4250	14.3	13.7	13.1
		25 + 50 + 50	2.00	4.00	4.00	—	—	—	3.7	10.0	12.0	880	3110	4250	14.3	13.7	13.1
		25 + 50 + 60	1.85	3.70	4.44	—	—	—	3.7	10.0	12.0	880	3100	4250	14.2	13.6	13.0
		25 + 60 + 60	1.72	4.14	4.14	—	—	—	3.7	10.0	12.0	880	3100	4250	14.2	13.6	13.0
		35 + 35 + 35	3.33	3.33	3.33	—	—	—	3.7	10.0	11.7	880	3120	4180	14.3	13.7	13.1
		35 + 35 + 50	2.92	2.92	4.17	—	—	—	3.7	10.0	12.0	880	3110	4250	14.3	13.7	13.1
		35 + 35 + 60	2.69	2.69	4.62	—	—	—	3.7	10.0	12.0	880	3110	4250	14.3	13.7	13.1
		35 + 50 + 50	2.59	3.70	3.70	—	—	—	3.7	10.0	12.0	880	3100	4250	14.2	13.6	13.0
		35 + 50 + 60	2.41	3.45	4.14	—	—	—	3.7	10.0	12.0	880	3100	4250	14.2	13.6	13.0
		35 + 60 + 60	2.26	3.87	3.87	—	—	—	3.7	10.0	12.0	880	3090	4250	14.2	13.6	13.0
		50 + 50 + 50	3.33	3.33	3.33	—	—	—	3.7	10.0	12.0	880	3100	4250	14.2	13.6	13.0
		50 + 50 + 60	3.13	3.13	3.75	—	—	—	3.7	10.0	12.0	880	3090	4250	14.2	13.6	13.0
	4 room	20 + 20 + 20 + 20	2.00	2.00	2.00	2.00	—	—	4.4	8.0	11.2	1100	2050	3680	9.3	8.9	8.6
		20 + 20 + 20 + 25	2.00	2.00	2.00	2.50	—	—	4.4	8.5	11.8	1100	2320	3890	10.6	10.1	9.7
		20 + 20 + 20 + 35	2.00	2.00	2.00	3.50	—	—	4.4	9.5	12.0	1100	2820	4050	12.8	12.3	11.8
		20 + 20 + 20 + 50	1.82	1.82	1.82	4.55	—	—	4.4	10.0	12.0	1100	3020	4050	13.7	13.1	12.6
		20 + 20 + 20 + 60	1.67	1.67	1.67	5.00	—	—	4.4	10.0	12.0	1100	3020	4050	13.7	13.1	12.6
		20 + 20 + 25 + 25	2.00	2.00	2.50	2.50	—	—	4.4	9.0	12.0	1100	2520	4050	11.5	11.0	10.5
		20 + 20 + 25 + 35	2.00	2.00	2.50	3.50	—	—	4.4	10.0	12.0	1100	3030	4050	13.8	13.2	12.6
		20 + 20 + 25 + 50	1.74	1.74	2.17	4.35	—	—	4.4	10.0	12.0	1100	3020	4050	13.7	13.1	12.6
		20 + 20 + 25 + 60	1.60	1.60	2.00	4.80	—	—	4.4	10.0	12.0	1100	3010	4050	13.7	13.1	12.6
		20 + 20 + 35 + 35	1.82	1.82	3.18	3.18	—	—	4.4	10.0	12.0	1100	3020	4050	13.7	13.1	12.6
		20 + 20 + 35 + 50	1.60	1.60	2.80	4.00	—	—	4.4	10.0	12.0	1100	3010	4050	13.7	13.1	12.6
		20 + 20 + 35 + 60	1.48	1.48	2.59	4.44	—	—	4.4	10.0	12.0	1100	3010	4050	13.7	13.1	12.6
		20 + 20 + 50 + 50	1.43	1.43	3.57	3.57	—	—	4.4	10.0	12.0	1100	3010	4050	13.7	13.1	12.6
		20 + 20 + 50 + 60	1.33	1.33	3.33	4.00	—	—	4.4	10.0	12.0	1100	3000	4050	13.7	13.1	12.5
		20 + 20 + 60 + 60	1.25	1.25	3.75	3.75	—	—	4.4	10.0	12.0	1100	2990	4050	13.6	13.0	12.5
		20 + 25 + 25 + 25	2.00	2.50	2.50	2.50	—	—	4.4	9.5	12.0	1100	2820	4050	12.8	12.3	11.8
		20 + 25 + 25 + 35	1.90	2.38	2.38	3.33	—	—	4.4	10.0	12.0	1100	3030	4050	13.8	13.2	12.6
		20 + 25 + 25 + 50	1.67	2.08	2.08	4.17	—	—	4.4	10.0	12.0	1100	3020	4050	13.7	13.1	12.6
		20 + 25 + 25 + 60	1.54	1.92	1.92	4.62	—	—	4.4	10.0	12.0	1100	3010	4050	13.7	13.1	12.6
		20 + 25 + 35 + 35	1.74	2.17	3.04	3.04	—	—	4.4	10.0	12.0	1100	3020	4050	13.7	13.1	12.6
		20 + 25 + 35 + 50	1.54	1.92	2.69	3.85	—	—	4.4	10.0	12.0	1100	3010	4050	13.7	13.1	12.6
		20 + 25 + 35 + 60	1.43	1.79	2.50	4.29	—	—	4.4	10.0	12.0	1100	3010	4050	13.7	13.1	12.6
		20 + 25 + 50 + 50	1.38	1.72	3.45	3.45	—	—	4.4	10.0	12.0	1100	3000	4050	13.7	13.1	12.5
		20 + 25 + 50 + 60	1.29	1.61	3.23	3.87	—	—	4.4	10.0	12.0	1100	3000	4050	13.7	13.1	12.5
		20 + 25 + 60 + 60	1.21	1.52	3.64	3.64	—	—	4.4	10.0	12.0	1100	2990	4050	13.6	13.0	12.5
		20 + 35 + 35 + 35	1.60	2.80	2.80	2.80	—	—	4.4	10.0	12.0	1100	3010	4050	13.7	13.1	12.6
		20 + 35 + 35 + 50	1.43	2.50	2.50	3.57	—	—	4.4	10.0	12.0	1100	3010	4050	13.7	13.1	12.6
		20 + 35 + 35 + 60	1.33	2.33	2.33	4.00	—	—	4.4	10.0	12.0	1100	3000	4050	13.7	13.1	12.5
		20 + 35 + 50 + 50	1.29	2.26	3.23	3.23	—	—	4.4	10.0	12.0	1100	3000	4050	13.7	13.1	12.5
		25 + 25 + 25 + 25	2.50	2.50	2.50	2.50	—	—	4.4	10.0	12.0	1100	3030	4050	13.8	13.2	12.6
		25 + 25 + 25 + 35	2.27	2.27	2.27	3.18	—	—	4.4	10.0	12.0	1100	3020	4050	13.7	13.1	12.6
		25 + 25 + 25 + 50	2.00	2.00	2.00	4.00	—	—	4.4	10.0	12.0	1100	3010	4050	13.7	13.1	12.6
		25 + 25 + 25 + 60	1.85	1.85	1.85	4.44	—	—	4.4	10.0	12.0	1100	3010	4050	13.7	13.1	12.6
		25 + 25 + 35 + 35	2.08	2.08	2.92	2.92	—	—	4.4	10.0	12.0	1100	3020	4050	13.7	13.1	12.6
		25 + 25 + 35 + 50	1.85	1.85	2.59	3.70	—	—	4.4	10.0	12.0	1100	3010	4050	13.7	13.1	12.6
		25 + 25 + 35 + 60	1.72	1.72	2.41	4.14	—	—	4.4	10.0	12.0	1100	3000	4050	13.7	13.1	12.5
		25 + 25 + 50 + 50	1.67	1.67	3.33	3.33	—	—	4.4	10.0	12.0	1100	3000	4050	13.7	13.1	12.5
		25 + 25 + 50 + 60	1.56	1.56	3.13	3.75	—	—	4.4	10.0	12.0	1100	2990	4050	13.6	13.0	12.5
		25 + 35 + 35 + 35	1.92	2.69	2.69	2.69	—	—	4.4	10.0	12.0	1100	3010	4050	13.7	13.1	12.6
		25 + 35 + 35 + 50	1.72	2.41	2.41	3.45	—	—	4.4	10.0	12.0	1100	3000	4050	13.7	13.1	12.5

Indoor unit combination			Cooling capacity (kW)									Power consumption (W)			Standard current (A)		
			Room cooling capacity (kW)						Total capacity (kW)			Min.	Standard	Max.	220V	230V	240V
			A room	B room	C room	D room	E room	F room	Min.	Standard	Max.						
Cooling operation	4 room	25 + 35 + 35 + 60	1.61	2.26	2.26	3.87	—	—	4.4	10.0	12.0	1100	3000	4050	13.7	13.1	12.5
		25 + 35 + 50 + 50	1.56	2.19	3.13	3.13	—	—	4.4	10.0	12.0	1100	2990	4050	13.6	13.0	12.5
		35 + 35 + 35 + 35	2.50	2.50	2.50	2.50	—	—	4.4	10.0	12.0	1100	3010	4050	13.7	13.1	12.6
		35 + 35 + 35 + 50	2.26	2.26	2.26	3.23	—	—	4.4	10.0	12.0	1100	3000	4050	13.7	13.1	12.5
	5 room	20 + 20 + 20 + 20 + 20	2.00	2.00	2.00	2.00	2.00	—	5.1	10.0	12.0	1210	2860	4030	13.0	12.4	11.9
		20 + 20 + 20 + 20 + 25	1.90	1.90	1.90	1.90	2.38	—	5.1	10.0	12.0	1210	2860	4030	13.0	12.4	11.9
		20 + 20 + 20 + 20 + 35	1.74	1.74	1.74	1.74	3.04	—	5.1	10.0	12.0	1210	2850	4030	13.0	12.4	11.9
		20 + 20 + 20 + 20 + 50	1.54	1.54	1.54	1.54	3.85	—	5.1	10.0	12.0	1210	2840	4030	12.9	12.4	11.8
		20 + 20 + 20 + 20 + 60	1.43	1.43	1.43	1.43	4.29	—	5.1	10.0	12.0	1210	2840	4030	12.9	12.4	11.8
		20 + 20 + 20 + 25 + 25	1.82	1.82	1.82	2.27	2.27	—	5.1	10.0	12.0	1210	2860	4030	13.0	12.4	11.9
		20 + 20 + 20 + 25 + 35	1.67	1.67	1.67	2.08	2.92	—	5.1	10.0	12.0	1210	2850	4030	13.0	12.4	11.9
		20 + 20 + 20 + 25 + 50	1.48	1.48	1.48	1.85	3.70	—	5.1	10.0	12.0	1210	2840	4030	12.9	12.4	11.8
		20 + 20 + 20 + 25 + 60	1.38	1.38	1.38	1.72	4.14	—	5.1	10.0	12.0	1210	2840	4030	12.9	12.4	11.8
		20 + 20 + 20 + 35 + 35	1.54	1.54	1.54	2.69	2.69	—	5.1	10.0	12.0	1210	2840	4030	12.9	12.4	11.8
		20 + 20 + 20 + 35 + 50	1.38	1.38	1.38	2.41	3.45	—	5.1	10.0	12.0	1210	2840	4030	12.9	12.4	11.8
		20 + 20 + 20 + 35 + 60	1.29	1.29	1.29	2.26	3.87	—	5.1	10.0	12.0	1210	2830	4030	12.9	12.3	11.8
		20 + 20 + 20 + 50 + 50	1.25	1.25	1.25	3.13	3.13	—	5.1	10.0	12.0	1210	2830	4030	12.9	12.3	11.8
		20 + 20 + 25 + 25 + 25	1.74	1.74	2.17	2.17	2.17	—	5.1	10.0	12.0	1210	2850	4030	13.0	12.4	11.9
		20 + 20 + 25 + 25 + 35	1.60	1.60	2.00	2.00	2.80	—	5.1	10.0	12.0	1210	2850	4030	13.0	12.4	11.9
		20 + 20 + 25 + 25 + 50	1.43	1.43	1.79	1.79	3.57	—	5.1	10.0	12.0	1210	2840	4030	12.9	12.4	11.8
		20 + 20 + 25 + 25 + 60	1.33	1.33	1.67	1.67	4.00	—	5.1	10.0	12.0	1210	2840	4030	12.9	12.4	11.8
		20 + 20 + 25 + 35 + 35	1.48	1.48	1.85	2.59	2.59	—	5.1	10.0	12.0	1210	2840	4030	12.9	12.4	11.8
		20 + 20 + 25 + 35 + 50	1.33	1.33	1.67	2.33	3.33	—	5.1	10.0	12.0	1210	2840	4030	12.9	12.4	11.8
		20 + 20 + 25 + 35 + 60	1.25	1.25	1.56	2.19	3.75	—	5.1	10.0	12.0	1210	2830	4030	12.9	12.3	11.8
		20 + 20 + 35 + 35 + 35	1.38	1.38	2.41	2.41	2.41	—	5.1	10.0	12.0	1210	2840	4030	12.9	12.4	11.8
		20 + 20 + 35 + 35 + 50	1.25	1.25	2.19	2.19	3.13	—	5.1	10.0	12.0	1210	2830	4030	12.9	12.3	11.8
		20 + 25 + 25 + 25 + 25	1.67	2.08	2.08	2.08	2.08	—	5.1	10.0	12.0	1210	2850	4030	13.0	12.4	11.9
		20 + 25 + 25 + 25 + 35	1.54	1.92	1.92	1.92	2.69	—	5.1	10.0	12.0	1210	2840	4030	12.9	12.4	11.8
		20 + 25 + 25 + 25 + 50	1.38	1.72	1.72	1.72	3.45	—	5.1	10.0	12.0	1210	2840	4030	12.9	12.4	11.8
		20 + 25 + 25 + 25 + 60	1.29	1.61	1.61	1.61	3.87	—	5.1	10.0	12.0	1210	2830	4030	12.9	12.3	11.8
		20 + 25 + 25 + 35 + 35	1.43	1.79	1.79	2.50	2.50	—	5.1	10.0	12.0	1210	2840	4030	12.9	12.4	11.8
		20 + 25 + 25 + 35 + 50	1.29	1.61	1.61	2.26	3.23	—	5.1	10.0	12.0	1210	2830	4030	12.9	12.3	11.8
		20 + 25 + 35 + 35 + 35	1.33	1.67	2.33	2.33	2.33	—	5.1	10.0	12.0	1210	2840	4030	12.9	12.4	11.8
		20 + 35 + 35 + 35 + 35	1.25	2.19	2.19	2.19	2.19	—	5.1	10.0	12.0	1210	2830	4030	12.9	12.3	11.8
		25 + 25 + 25 + 25 + 25	2.00	2.00	2.00	2.00	2.00	—	5.1	10.0	12.0	1210	2850	4030	13.0	12.4	11.9
		25 + 25 + 25 + 25 + 35	1.85	1.85	1.85	1.85	2.59	—	5.1	10.0	12.0	1210	2840	4030	12.9	12.4	11.8
		25 + 25 + 25 + 25 + 50	1.67	1.67	1.67	1.67	3.33	—	5.1	10.0	12.0	1210	2840	4030	12.9	12.4	11.8
		25 + 25 + 25 + 25 + 60	1.56	1.56	1.56	1.56	3.75	—	5.1	10.0	12.0	1210	2830	4030	12.9	12.3	11.8
		25 + 25 + 25 + 35 + 35	1.72	1.72	1.72	2.41	2.41	—	5.1	10.0	12.0	1210	2840	4030	12.9	12.4	11.8
		25 + 25 + 25 + 35 + 50	1.56	1.56	1.56	2.19	3.13	—	5.1	10.0	12.0	1210	2830	4030	12.9	12.3	11.8
		25 + 25 + 35 + 35 + 35	1.61	1.61	2.26	2.26	2.26	—	5.1	10.0	12.0	1210	2830	4030	12.9	12.3	11.8

SCM100ZM-S Table of Indoor unit combination not with SRK-ZMX-S type only

Indoor unit combination			Heating capacity (kW)									Power consumption (W)			Standard current (A)		
			Room heating capacity (kW)						Total capacity (kW)			Min.	Standard	Max.	220V	230V	240V
			A room	B room	C room	D room	E room	F room	Min.	Standard	Max.						
Heating operation	1 room	20	3.0	—	—	—	—	—	1.5	3.0	3.6	700	1220	1330	5.6	5.4	5.1
		25	3.4	—	—	—	—	—	1.5	3.4	4.1	700	1265	1540	5.8	5.6	5.3
		35	4.5	—	—	—	—	—	1.5	4.5	4.9	700	1650	1840	7.6	7.2	6.9
		50	5.8	—	—	—	—	—	1.5	5.8	6.4	700	2120	2410	9.7	9.3	8.9
		60	6.8	—	—	—	—	—	1.5	6.8	7.4	700	2500	2760	11.5	11.0	10.5
		71	8.0	—	—	—	—	—	1.5	8.0	8.1	700	3020	3090	13.9	13.3	12.7
	2 room	20 + 20	3.00	3.00	—	—	—	—	2.1	6.0	7.2	750	1540	1860	7.1	6.8	6.5
		20 + 25	2.84	3.56	—	—	—	—	2.1	6.4	7.7	750	1660	2210	7.6	7.3	7.0
		20 + 35	2.73	4.77	—	—	—	—	2.1	7.5	8.5	750	1990	2520	9.1	8.7	8.4
		20 + 50	2.51	6.29	—	—	—	—	2.1	8.8	10.0	750	2430	3220	11.2	10.7	10.2
		20 + 60	2.45	7.35	—	—	—	—	2.1	9.8	11.0	750	2840	3620	13.0	12.5	12.0
		20 + 71	2.42	8.58	—	—	—	—	2.1	11.0	11.6	750	2840	3620	13.0	12.5	12.0
		25 + 25	3.40	3.40	—	—	—	—	2.1	6.8	8.2	750	1770	2420	8.1	7.8	7.4
		25 + 35	3.29	4.61	—	—	—	—	2.1	7.9	9.0	750	2140	2820	9.8	9.4	9.0
		25 + 50	3.07	6.13	—	—	—	—	2.1	9.2	10.5	750	2630	3610	12.1	11.6	11.1
		25 + 60	3.00	7.20	—	—	—	—	2.1	10.2	11.5	750	3040	3790	14.0	13.4	12.8
		25 + 71	2.97	8.43	—	—	—	—	2.1	11.4	12.1	750	3440	4250	15.8	15.1	14.5
		35 + 35	4.50	4.50	—	—	—	—	2.1	9.0	9.8	750	2520	3210	11.6	11.1	10.6
		35 + 50	4.24	6.06	—	—	—	—	2.1	10.3	11.3	750	3040	3710	14.0	13.4	12.8
		35 + 60	4.16	7.14	—	—	—	—	2.1	11.3	12.3	750	3420	4320	15.7	15.0	14.4
		35 + 71	3.96	8.04	—	—	—	—	2.1	12.0	12.9	750	4030	4690	18.5	17.7	17.0
		50 + 50	5.80	5.80	—	—	—	—	2.1	11.6	12.8	750	3660	4620	16.8	16.1	15.4
		50 + 60	5.45	6.55	—	—	—	—	2.1	12.0	13.3	750	4030	4920	18.5	17.7	17.0
		50 + 71	4.96	7.04	—	—	—	—	2.1	12.0	13.3	750	4030	4920	18.5	17.7	17.0
		60 + 60	6.00	6.00	—	—	—	—	2.1	12.0	13.3	750	4030	4920	18.5	17.7	17.0
		60 + 71	5.50	6.50	—	—	—	—	2.1	12.0	13.3	750	4030	4920	18.5	17.7	17.0
		71 + 71	6.00	6.00	—	—	—	—	2.1	12.0	13.3	750	4030	4920	18.5	17.7	17.0
	3 room	20 + 20 + 20	3.00	3.00	3.00	—	—	—	3.2	9.0	10.9	780	2270	3350	10.4	10.0	9.6
		20 + 20 + 25	2.89	2.89	3.62	—	—	—	3.2	9.4	11.4	780	2400	3550	11.0	10.5	10.1
		20 + 20 + 35	2.80	2.80	4.90	—	—	—	3.2	10.5	12.2	780	2760	3820	12.7	12.1	11.6
		20 + 20 + 50	2.62	2.62	6.56	—	—	—	3.2	11.8	13.3	780	3270	4290	15.0	14.4	13.8
		20 + 20 + 60	2.40	2.40	7.20	—	—	—	3.2	12.0	13.3	780	3420	4290	15.7	15.0	14.4
		20 + 20 + 71	2.16	2.16	7.68	—	—	—	3.2	12.0	13.3	780	3410	4290	15.7	15.0	14.4
		20 + 25 + 25	2.80	3.50	3.50	—	—	—	3.2	9.8	11.9	780	2560	3720	11.8	11.2	10.8
		20 + 25 + 35	2.73	3.41	4.77	—	—	—	3.2	10.9	12.7	780	2970	3990	13.6	13.0	12.5
		20 + 25 + 50	2.53	3.16	6.32	—	—	—	3.2	12.0	13.3	780	3420	4290	15.7	15.0	14.4
		20 + 25 + 60	2.29	2.86	6.86	—	—	—	3.2	12.0	13.3	780	3420	4290	15.7	15.0	14.4
		20 + 25 + 71	2.07	2.59	7.34	—	—	—	3.2	12.0	13.3	780	3410	4290	15.7	15.0	14.4
		20 + 35 + 35	2.67	4.67	4.67	—	—	—	3.2	12.0	13.3	780	3420	4290	15.7	15.0	14.4
		20 + 35 + 50	2.29	4.00	5.71	—	—	—	3.2	12.0	13.3	780	3420	4290	15.7	15.0	14.4
		20 + 35 + 60	2.09	3.65	6.26	—	—	—	3.2	12.0	13.3	780	3410	4290	15.7	15.0	14.4
		20 + 35 + 71	1.90	3.33	6.76	—	—	—	3.2	12.0	13.3	780	3410	4290	15.7	15.0	14.4
		20 + 50 + 50	2.00	5.00	5.00	—	—	—	3.2	12.0	13.3	780	3410	4290	15.7	15.0	14.4
		20 + 50 + 60	1.85	4.62	5.54	—	—	—	3.2	12.0	13.3	780	3400	4290	15.6	14.9	14.3
		20 + 50 + 71	1.70	4.26	6.04	—	—	—	4.2	12.0	13.3	780	3390	4290	15.6	14.9	14.3

Indoor unit combination			Heating capacity (kW)									Power consumption (W)			Standard current (A)		
			Room heating capacity (kW)						Total capacity (kW)			Min.	Standard	Max.	220V	230V	240V
			A room	B room	C room	D room	E room	F room	Min.	Standard	Max.						
Heating operation	3 room	20 + 60 + 60	1.71	5.14	5.14	—	—	—	5.2	12.0	13.3	780	3390	4290	15.6	14.9	14.3
		20 + 60 + 71	1.59	4.77	5.64	—	—	—	6.2	12.0	13.3	780	3390	4290	15.6	14.9	14.3
		25 + 25 + 25	3.40	3.40	3.40	—	—	—	3.2	10.2	12.4	780	2760	3880	12.7	12.1	11.6
		25 + 25 + 35	3.32	3.32	4.65	—	—	—	3.2	11.3	13.2	780	3170	4120	14.6	13.9	13.3
		25 + 25 + 50	3.00	3.00	6.00	—	—	—	3.2	12.0	13.3	780	3420	4290	15.7	15.0	14.4
		25 + 25 + 60	2.73	2.73	6.55	—	—	—	3.2	12.0	13.3	780	3410	4290	15.7	15.0	14.4
		25 + 25 + 71	2.48	2.48	7.04	—	—	—	3.2	12.0	13.3	780	3410	4290	15.7	15.0	14.4
		25 + 35 + 35	3.16	4.42	4.42	—	—	—	3.2	12.0	13.3	780	3420	4290	15.7	15.0	14.4
		25 + 35 + 50	2.73	3.82	5.45	—	—	—	3.2	12.0	13.3	780	3410	4290	15.7	15.0	14.4
		25 + 35 + 60	2.50	3.50	6.00	—	—	—	3.2	12.0	13.3	780	3410	4290	15.7	15.0	14.4
		25 + 35 + 71	2.29	3.21	6.50	—	—	—	4.2	12.0	13.3	780	3400	4290	15.6	14.9	14.3
		25 + 50 + 50	2.40	4.80	4.80	—	—	—	3.2	12.0	13.3	780	3410	4290	15.7	15.0	14.4
		25 + 50 + 60	2.22	4.44	5.33	—	—	—	3.2	12.0	13.3	780	3400	4290	15.6	14.9	14.3
		25 + 50 + 71	2.05	4.11	5.84	—	—	—	3.2	12.0	13.3	780	3390	4290	15.6	14.9	14.3
		25 + 60 + 60	2.07	4.97	4.97	—	—	—	3.2	12.0	13.3	780	3390	4290	15.6	14.9	14.3
		25 + 60 + 71	1.92	4.62	5.46	—	—	—	3.2	12.0	13.3	780	3390	4290	15.6	14.9	14.3
		35 + 35 + 35	4.00	4.00	4.00	—	—	—	3.2	12.0	13.3	780	3420	4290	15.7	15.0	14.4
		35 + 35 + 50	3.50	3.50	5.00	—	—	—	3.2	12.0	13.3	780	3410	4290	15.7	15.0	14.4
		35 + 35 + 60	3.23	3.23	5.54	—	—	—	3.2	12.0	13.3	780	3400	4290	15.6	14.9	14.3
		35 + 35 + 71	2.98	2.98	6.04	—	—	—	3.2	12.0	13.3	780	3390	4290	15.6	14.9	14.3
		35 + 50 + 50	3.11	4.44	4.44	—	—	—	3.2	12.0	13.3	780	3400	4290	15.6	14.9	14.3
		35 + 50 + 60	2.90	4.14	4.97	—	—	—	3.2	12.0	13.3	780	3390	4290	15.6	14.9	14.3
		35 + 50 + 71	2.69	3.85	5.46	—	—	—	3.2	12.0	13.3	780	3390	4290	15.6	14.9	14.3
		35 + 60 + 60	2.71	4.65	4.65	—	—	—	3.2	12.0	13.3	780	3390	4290	15.6	14.9	14.3
		50 + 50 + 50	4.00	4.00	4.00	—	—	—	3.2	12.0	13.3	780	3390	4290	15.6	14.9	14.3
		50 + 50 + 60	3.75	3.75	4.50	—	—	—	3.2	12.0	13.3	780	3380	4290	15.5	14.8	14.2
	4 room	20 + 20 + 20 + 20	3.00	3.00	3.00	3.00	—	—	3.6	12.0	13.3	950	3270	3920	14.9	14.2	13.6
		20 + 20 + 20 + 25	2.82	2.82	2.82	3.53	—	—	3.6	12.0	13.3	950	3270	3920	14.9	14.2	13.6
		20 + 20 + 20 + 35	2.53	2.53	2.53	4.42	—	—	3.6	12.0	13.3	950	3270	3920	14.9	14.2	13.6
		20 + 20 + 20 + 50	2.18	2.18	2.18	5.45	—	—	3.6	12.0	13.3	950	3260	3920	14.8	14.2	13.6
		20 + 20 + 20 + 60	2.00	2.00	2.00	6.00	—	—	3.6	12.0	13.3	950	3250	3920	14.8	14.1	13.6
		20 + 20 + 20 + 71	1.83	1.83	1.83	6.50	—	—	3.6	12.0	13.3	950	3250	3920	14.6	14.0	13.4
		20 + 20 + 25 + 25	2.67	2.67	3.33	3.33	—	—	3.6	12.0	13.3	950	3270	3920	14.9	14.2	13.6
		20 + 20 + 25 + 35	2.40	2.40	3.00	4.20	—	—	3.6	12.0	13.3	950	3260	3920	14.8	14.2	13.6
		20 + 20 + 25 + 50	2.09	2.09	2.61	5.22	—	—	3.6	12.0	13.3	950	3260	3920	14.8	14.2	13.6
		20 + 20 + 25 + 60	1.92	1.92	2.40	5.76	—	—	3.6	12.0	13.3	950	3250	3920	14.8	14.1	13.6
		20 + 20 + 25 + 71	1.76	1.76	2.21	6.26	—	—	3.6	12.0	13.3	950	3250	3920	14.8	14.1	13.6
		20 + 20 + 35 + 35	2.18	2.18	3.82	3.82	—	—	3.6	12.0	13.3	950	3260	3920	14.8	14.2	13.6
		20 + 20 + 35 + 50	1.92	1.92	3.36	4.80	—	—	3.6	12.0	13.3	950	3250	3920	14.8	14.1	13.6
		20 + 20 + 35 + 60	1.78	1.78	3.11	5.33	—	—	3.6	12.0	13.3	950	3250	3920	14.8	14.1	13.6
		20 + 20 + 35 + 71	1.64	1.64	2.88	5.84	—	—	3.6	12.0	13.3	950	3240	3920	14.7	14.1	13.5
		20 + 20 + 50 + 50	1.71	1.71	4.29	4.29	—	—	3.6	12.0	13.3	950	3240	3920	14.7	14.1	13.5
		20 + 20 + 50 + 60	1.60	1.60	4.00	4.80	—	—	3.6	12.0	13.3	950	3240	3920	14.7	14.1	13.5
		20 + 20 + 60 + 60	1.50	1.50	4.50	4.50	—	—	3.6	12.0	13.3	950	3240	3920	14.7	14.1	13.5
		20 + 25 + 25 + 25	2.53	3.16	3.16	3.16	—	—	3.6	12.0	13.3	950	3270	3920	14.9	14.2	13.6
		20 + 25 + 25 + 35	2.29	2.86	2.86	4.00	—	—	3.6	12.0	13.3	950	3260	3920	14.8	14.2	13.6
		20 + 25 + 25 + 50	2.00	2.50	2.50	5.00	—	—	3.6	12.0	13.3	950	3250	3920	14.8	14.1	13.6
		20 + 25 + 25 + 60	1.85	2.31	2.31	5.54	—	—	3.6	12.0	13.3	950	3250	3920	14.8	14.1	13.6
		20 + 25 + 25 + 71	1.70	2.13	2.13	6.04	—	—	3.6	12.0	13.3	950	3240	3920	14.7	14.1	13.5
		20 + 25 + 35 + 35	2.09	2.61	3.65	3.65	—	—	3.6	12.0	13.3	950	3260	3920	14.8	14.2	13.6
		20 + 25 + 35 + 50	1.85	2.31	3.23	4.62	—	—	3.6	12.0	13.3	950	3250	3920	14.8	14.1	13.6
		20 + 25 + 35 + 60	1.71	2.14	3.00	5.14	—	—	3.6	12.0	13.3	950	3240	3920	14.7	14.1	13.5
		20 + 25 + 35 + 71	1.59	1.99	2.78	5.64	—	—	3.6	12.0	13.3	950	3240	3920	14.7	14.1	13.5
		20 + 25 + 50 + 50	1.66	2.07	4.14	4.14	—	—	3.6	12.0	13.3	950	3240	3920	14.7	14.1	13.5
		20 + 25 + 50 + 60	1.55	1.94	3.87	4.65	—	—	3.6	12.0	13.3	950	3240	3920	14.7	14.1	13.5
		20 + 35 + 35 + 35	1.92	3.36	3.36	3.36	—	—	3.6	12.0	13.3	950	3250	3920	14.8	14.1	13.6
		20 + 35 + 35 + 50	1.71	3.00	3.00	4.29	—	—	3.6	12.0	13.3	950	3240	3920	14.7	14.1	13.5
		20 + 35 + 35 + 60	1.60	2.80	2.80	4.80	—	—	3.6	12.0	13.3	950	3240	3920	14.7	14.1	13.5
		20 + 35 + 50 + 50	1.55	2.71	3.87	3.87	—	—	3.6	12.0	13.3	950	3240	3920	14.7	14.1	13.5
		25 + 25 + 25 + 25	3.00	3.00	3.00	3.00	—	—	3.6	12.0	13.3	950	3260	3920	14.8	14.2	13.6
		25 + 25 + 25 + 35	2.73	2.73	2.73	3.82	—	—	3.6	12.0	13.3	950	3260	3920	14.8	14.2	13.6
		25 + 25 + 25 + 50	2.40	2.40	2.40	4.80	—	—	3.6	12.0	13.3	950	3250	3920	14.8	14.1	13.6
		25 + 25 + 25 + 60	2.22	2.22	2.22	5.33	—	—	3.6	12.0	13.3	950	3250	3920	14.8	14.1	13.6
		25 + 25 + 25 + 71	2.05	2.05	2.05	5.84	—	—	3.6	12.0	13.3	950	3240	3920	14.7	14.1	13.5
		25 + 25 + 35 + 35	2.50	2.50	3.50	3.50	—	—	3.6	12.0	13.3	950	3250	3920	14.8	14.1	13.6
		25 + 25 + 35 + 50	2.22	2.22	3.11	4.44	—	—	3.6	12.0	13.3	950	3250	3920	14.8	14.1	13.6
		25 + 25 + 35 + 60	2.07	2.07	2.90	4.97	—	—	3.6	12.0	13.3	950	3240	3920	14.7	14.1	13.5
		25 + 25 + 35 + 71	1.92	1.92	2.69	5.46	—	—	3.6	12.0	13.3	950	3240	3920	14.7	14.1	13.5
		25 + 25 + 50 + 50	2.00	2.00	4.00	4.00	—	—	3.6	12.0	13.3	950	3240	3920	14.7	14.1	13.5
		25 + 25 + 50 + 60	1.88	1.88	3.75	4.50	—	—	3.6	12.0	13.3	950	3240	3920	14.7	14.1	13.5
		25 + 35 + 35 + 35	2.31	3.23	3.23	3.23	—	—	3.6	12.0	13.3	950	3250	3920	14.8	14.1	13.6
		25 + 35 + 35 + 50	2.07	2.90	2.90	4.14	—	—	3.6	12.0	13.3	950	3240	3920	14.7	14.1	13.5
		25 + 35 + 35 + 60	1.94	2.71	2.71	4.65	—	—	3.6	12.0	13.3	950	3240	3920	14.7	14.1	13.5
		25 + 35 + 50 + 50	1.88	2.63	3.75	3.75	—	—	3.6	12.0	13.3	950	3240	3920	14.7	14.1	13.5
		35 + 35 + 35 + 35	3.00	3.00	3.00	3.00	—	—	3.6	12.0	13.3	950	3240	3920	14.7	14.1	13.5
		35 + 35 + 35 + 50	2.71	2.71	2.71	3.87	—	—	3.6	12.0	13.3	950	3240	3920	14.7	14.1	13.5
	5 room	20 + 20 + 20 + 20 + 20	2.40	2.40	2.40	2.40	2.40	—	4.0	12.0	13.3	1050	3220	3620	14.7	14.0	13.4
		20 + 20 + 20 + 20 + 25	2.29	2.29	2.29	2.29	2.86	—	4.0	12.0	13.3	1050	3220	3620	14.7	14.0	13.4
		20 + 20 + 20 + 20 + 35	2.09	2.09	2.09	2.09	3.65	—	4.0	12.0	13.3	1050	3210	3620	14.6	14.0	13.4
		20 + 20 + 20 + 20 + 50	1.85	1.85	1.85	1.85	4.62	—	4.0	12.0	13.3	1050	3200	3620	14.6	13.9	13.3
		20 + 20 + 20 + 20 + 60	1.71	1.71	1.71	1.71	5.14	—	4.0	12.0	13.3	1050	3200	3620	14.6	13.9	13.3
		20 + 20 + 20 + 20 + 71	1.59	1.59	1.59	1.59	5.64	—	4.0	12.0	13.3	1050	3190	3620	14.5	13.9	13.3
		20 + 20 + 20 + 25 + 25	2.18	2.18	2.18	2.73	2.73	—	4.0	12.0	13.3	1050	3210	3620	14.6	14.0	13.4
		20 + 20 + 20 + 25 + 35	2.00	2.00	2.00	2.50	3.50	—	4.0	12.0	13.3	1050	3210	3620	14.6	14.0	13.4
		20 + 20 + 20 + 25 + 50	1.78	1.78	1.78	2.22	4.44	—	4.0	12.0	13.3	1050	3200	3620	14.6	13.9	13.3
		20 + 20 + 20 + 25 + 60	1.66	1.66	1.66	2.07	4.97	—	4.0	12.0	13.3	1050	3200	3620	14.6	13.9	13.3
		20 + 20 + 20 + 25 + 71	1.54	1.54	1.54	1.92	5.46	—	4.0	12.0	13.3	1050	3190	3620	14.5	13.9	13.3
		20 + 20 + 20 + 35 + 35	1.85	1.85	1.85	3.23	3.23	—	4.0	12.0	13.3	1050	3200	3620	14.6	13.9	13.3
		20 + 20 + 20 + 35 + 50	1.66	1.66	1.66	2.90	4.14	—	4.0	12.0	13.3	1050	3200	3620	14.6	13.9	13.3
		20 + 20 + 20 + 35 + 60	1.55	1.55	1.55	2.71	4.65	—	4.0	12.0	13.3	1050	3190	3620	14.5	13.9	13.3
		20 + 20 + 20 + 50 + 50	1.50	1.50	1.50	3.75	3.75	—	4.0	12.0	13.3	1050	3190	3620	14.5	13.9	13.3
		20 + 20 + 25 + 25 + 25	2.09	2.09	2.61	2.61	2.61	—	4.0	12.0	13.3	1050	3210	3620	14.6	14.0	13.4
		20 + 20 + 25 + 25 + 35	1.92	1.92	2.40	2.40	3.36	—	4.0	12.0	13.3	1050	3210	3620	14.6	14.0	13.4

Heating operation

Indoor unit combination		Heating capacity (kW)									Power consumption (W)			Standard current (A)		
		Room heating capacity (kW)						Total capacity (kW)			Min.	Standard	Max.	220V	230V	240V
		A room	B room	C room	D room	E room	F room	Min.	Standard	Max.						
5 room	20 + 20 + 25 + 25 + 50	1.71	1.71	2.14	2.14	4.29	—	4.0	12.0	13.3	1050	3200	3620	14.6	13.9	13.3
	20 + 20 + 25 + 25 + 60	1.60	1.60	2.00	2.00	4.80	—	4.0	12.0	13.3	1050	3190	3620	14.5	13.9	13.3
	20 + 20 + 25 + 35 + 35	1.78	1.78	2.22	3.11	3.11	—	4.0	12.0	13.3	1050	3200	3620	14.6	13.9	13.3
	20 + 20 + 25 + 35 + 50	1.60	1.60	2.00	2.80	4.00	—	4.0	12.0	13.3	1050	3190	3620	14.5	13.9	13.3
	20 + 20 + 25 + 35 + 60	1.50	1.50	1.88	2.63	4.50	—	4.0	12.0	13.3	1050	3190	3620	14.5	13.9	13.3
	20 + 20 + 35 + 35 + 35	1.66	1.66	2.90	2.90	2.90	—	4.0	12.0	13.3	1050	3200	3620	14.6	13.9	13.3
	20 + 20 + 35 + 35 + 50	1.50	1.50	2.63	2.63	3.75	—	4.0	12.0	13.3	1050	3190	3620	14.5	13.9	13.3
	20 + 25 + 25 + 25 + 25	2.00	2.50	2.50	2.50	2.50	—	4.0	12.0	13.3	1050	3210	3620	14.6	14.0	13.4
	20 + 25 + 25 + 25 + 35	1.85	2.31	2.31	2.31	3.23	—	4.0	12.0	13.3	1050	3200	3620	14.6	13.9	13.3
	20 + 25 + 25 + 25 + 50	1.66	2.07	2.07	2.07	4.14	—	4.0	12.0	13.3	1050	3200	3620	14.6	13.9	13.3
	20 + 25 + 25 + 25 + 60	1.55	1.94	1.94	1.94	4.65	—	4.0	12.0	13.3	1050	3190	3620	14.5	13.9	13.3
	20 + 25 + 25 + 35 + 35	1.71	2.14	2.14	3.00	3.00	—	4.0	12.0	13.3	1050	3200	3620	14.6	13.9	13.3
	20 + 25 + 25 + 35 + 50	1.55	1.94	1.94	2.71	3.87	—	4.0	12.0	13.3	1050	3190	3620	14.5	13.9	13.3
	20 + 25 + 35 + 35 + 35	1.60	2.00	2.80	2.80	2.80	—	4.0	12.0	13.3	1050	3190	3620	14.5	13.9	13.3
	20 + 35 + 35 + 35 + 35	1.50	2.63	2.63	2.63	2.63	—	4.0	12.0	13.3	1050	3190	3620	14.5	13.9	13.3
	25 + 25 + 25 + 25 + 25	2.40	2.40	2.40	2.40	2.40	—	4.0	12.0	13.3	1050	3210	3620	14.6	14.0	13.4
	25 + 25 + 25 + 25 + 35	2.22	2.22	2.22	2.22	3.11	—	4.0	12.0	13.3	1050	3200	3620	14.6	13.9	13.3
	25 + 25 + 25 + 25 + 50	2.00	2.00	2.00	2.00	4.00	—	4.0	12.0	13.3	1050	3190	3620	14.5	13.9	13.3
	25 + 25 + 25 + 25 + 60	1.88	1.88	1.88	1.88	4.50	—	4.0	12.0	13.3	1050	3190	3620	14.5	13.9	13.3
	25 + 25 + 25 + 35 + 35	2.07	2.07	2.07	2.90	2.90	—	4.0	12.0	13.3	1050	3200	3620	14.6	13.9	13.3
	25 + 25 + 25 + 35 + 50	1.88	1.88	1.88	2.63	3.75	—	4.0	12.0	13.3	1050	3190	3620	14.5	13.9	13.3
	25 + 25 + 35 + 35 + 35	1.94	1.94	2.71	2.71	2.71	—	4.0	12.0	13.3	1050	3190	3620	14.5	13.9	13.3

Cooling operation

Indoor unit combination		Cooling capacity (kW)									Power consumption (W)			Standard current (A)		
		Room cooling capacity (kW)						Total capacity (kW)			Min.	Standard	Max.	220V	230V	240V
		A room	B room	C room	D room	E room	F room	Min.	Standard	Max.						
1 room	20	2.0	—	—	—	—	—	1.8	2.0	2.7	650	780	1100	3.6	3.4	3.3
	25	2.5	—	—	—	—	—	1.8	2.5	3.2	650	1000	1350	4.6	4.4	4.2
	35	3.5	—	—	—	—	—	1.8	3.5	3.7	650	1500	1600	6.9	6.6	6.3
	50	5.0	—	—	—	—	—	1.8	5.0	5.8	650	2150	2500	9.9	9.4	9.0
	60	6.0	—	—	—	—	—	1.8	6.0	6.7	650	2720	3000	12.5	11.9	11.4
	71	7.1	—	—	—	—	—	1.8	7.1	7.2	650	3250	3080	14.9	14.3	13.7
2 room	20 + 20	2.00	2.00	—	—	—	—	3.0	4.0	5.4	740	960	1460	4.4	4.2	4.0
	20 + 25	2.00	2.50	—	—	—	—	3.0	4.5	5.9	740	1100	1820	5.1	4.8	4.6
	20 + 35	2.00	3.50	—	—	—	—	3.0	5.5	6.4	740	1500	2020	6.9	6.6	6.3
	20 + 50	2.00	5.00	—	—	—	—	3.0	7.0	8.5	740	2290	2820	10.5	10.1	9.6
	20 + 60	2.00	6.00	—	—	—	—	3.0	8.0	9.4	740	2660	3360	12.2	11.7	11.2
	20 + 71	2.00	7.10	—	—	—	—	3.0	9.1	9.9	740	3100	3780	14.1	13.5	12.9
	25 + 25	2.50	2.50	—	—	—	—	3.0	5.0	6.8	740	1420	2200	6.5	6.2	6.0
	25 + 35	2.50	3.50	—	—	—	—	3.0	6.0	6.9	740	1810	2320	8.3	7.9	7.6
	25 + 50	2.50	5.00	—	—	—	—	3.0	7.5	9.0	740	2470	3220	11.3	10.8	10.4
	25 + 60	2.50	6.00	—	—	—	—	3.0	8.5	9.4	740	2810	3360	12.9	12.3	11.8
	25 + 71	2.53	7.17	—	—	—	—	3.0	9.7	10.4	740	3350	4020	15.4	14.7	14.1
	35 + 35	3.50	3.50	—	—	—	—	3.0	7.0	7.4	740	2290	2820	10.5	10.1	9.6
	35 + 50	3.50	5.00	—	—	—	—	3.0	8.5	9.5	740	2810	3620	12.9	12.3	11.8
	35 + 60	3.50	6.00	—	—	—	—	3.0	9.5	10.4	740	3280	3990	15.1	14.4	13.8
	35 + 71	3.30	6.70	—	—	—	—	3.0	10.0	10.9	740	3480	4250	15.8	15.1	14.5
	50 + 50	5.00	5.00	—	—	—	—	3.0	10.0	11.6	740	3480	4350	16.0	15.3	14.6
	50 + 60	4.55	5.45	—	—	—	—	3.0	10.0	11.8	740	3480	4410	16.0	15.3	14.6
	50 + 71	4.13	5.87	—	—	—	—	3.0	10.0	11.8	740	3470	4410	15.8	15.1	14.5
	60 + 60	5.00	5.00	—	—	—	—	3.0	10.0	11.8	740	3470	4410	15.9	15.2	14.6
	60 + 71	4.58	5.42	—	—	—	—	3.0	10.0	11.8	740	3470	4410	15.8	15.1	14.5
	71 + 71	5.00	5.00	—	—	—	—	3.0	10.0	11.8	740	3460	4410	15.6	14.9	14.3
3 room	20 + 20 + 20	2.00	2.00	2.00	—	—	—	3.7	6.0	8.1	880	1530	2490	7.0	6.7	6.4
	20 + 20 + 25	2.00	2.00	2.50	—	—	—	3.7	6.5	8.6	880	1730	2700	7.9	7.6	7.3
	20 + 20 + 35	2.00	2.00	3.50	—	—	—	3.7	7.5	9.1	880	2080	3120	9.6	9.1	8.8
	20 + 20 + 50	2.00	2.00	5.00	—	—	—	3.7	9.0	11.2	880	2730	4000	12.5	12.0	11.5
	20 + 20 + 60	2.00	2.00	6.00	—	—	—	3.7	10.0	11.8	880	3280	4250	15.1	14.4	13.8
	20 + 20 + 71	1.80	1.80	6.40	—	—	—	3.7	10.0	11.8	880	3280	4250	15.1	14.4	13.8
	20 + 25 + 25	2.00	2.50	2.50	—	—	—	3.7	7.0	9.1	880	1940	3210	8.9	8.5	8.2
	20 + 25 + 35	2.00	2.50	3.50	—	—	—	3.7	8.0	9.6	880	2440	3630	11.2	10.7	10.3
	20 + 25 + 50	2.00	2.50	5.00	—	—	—	3.7	9.5	11.5	880	3130	4120	14.4	13.7	13.2
	20 + 25 + 60	1.90	2.38	5.71	—	—	—	3.7	10.0	11.8	880	3280	4250	15.1	14.4	13.8
	20 + 25 + 71	1.72	2.16	6.12	—	—	—	3.7	10.0	11.8	880	3280	4250	15.1	14.4	13.8
	20 + 35 + 35	2.00	3.50	3.50	—	—	—	3.7	9.0	10.1	880	2920	3640	13.4	12.8	12.3
	20 + 35 + 50	1.90	3.33	4.76	—	—	—	3.7	10.0	11.8	880	3280	4250	15.1	14.4	13.8
	20 + 35 + 60	1.74	3.04	5.22	—	—	—	3.7	10.0	11.8	880	3280	4250	15.1	14.4	13.8
	20 + 35 + 71	1.59	2.78	5.63	—	—	—	4.7	10.0	11.8	880	3270	4250	15.0	14.4	13.8
	20 + 50 + 50	1.67	4.17	4.17	—	—	—	3.7	10.0	11.8	880	3270	4250	15.0	14.4	13.8
	20 + 50 + 60	1.54	3.85	4.62	—	—	—	3.7	10.0	11.8	880	3270	4250	15.0	14.4	13.8
	20 + 50 + 71	1.42	3.55	5.04	—	—	—	3.7	10.0	11.8	880	3260	4250	15.0	14.3	13.7
	20 + 60 + 60	1.43	4.29	4.29	—	—	—	3.7	10.0	11.8	880	3260	4250	15.0	14.3	13.7
	20 + 60 + 71	1.32	3.97	4.70	—	—	—	3.7	10.0	11.8	880	3260	4250	15.0	14.3	13.7
	25 + 25 + 25	2.50	2.50	2.50	—	—	—	3.7	7.5	9.4	880	2130	3340	9.8	9.4	9.0
	25 + 25 + 35	2.50	2.50	3.50	—	—	—	3.7	8.5	9.9	880	2650	3540	12.2	11.6	11.2
	25 + 25 + 50	2.50	2.50	5.00	—	—	—	3.7	10.0	11.8	880	3280	4250	15.1	14.4	13.8
	25 + 25 + 60	2.27	2.27	5.45	—	—	—	3.7	10.0	11.8	880	3280	4250	15.1	14.4	13.8
	25 + 25 + 71	2.07	2.07	5.87	—	—	—	3.7	10.0	11.8	880	3270	4250	15.0	14.4	13.8
	25 + 35 + 35	2.50	3.50	3.50	—	—	—	3.7	9.5	10.4	880	3130	3950	14.4	13.7	13.2
	25 + 35 + 50	2.27	3.18	4.55	—	—	—	3.7	10.0	11.8	880	3280	4250	15.1	14.4	13.8
	25 + 35 + 60	2.08	2.92	5.00	—	—	—	3.7	10.0	11.8	880	3270	4250	15.0	14.4	13.8
	25 + 35 + 71	1.91	2.67	5.42	—	—	—	3.7	10.0	11.8	880	3270	4250	15.0	14.4	13.8
	25 + 50 + 50	2.00	4.00	4.00	—	—	—	3.7	10.0	11.8	880	3270	4250	15.0	14.4	13.8
	25 + 50 + 60	1.85	3.70	4.44	—	—	—	3.7	10.0	11.8	880	3270	4250	15.0	14.4	13.8
	25 + 50 + 71	1.71	3.42	4.86	—	—	—	3.7	10.0	11.8	880	3260	4250	21.4	20.5	19.7
	25 + 60 + 60	1.72	4.14	4.14	—	—	—	3.7	10.0	11.8	880	3260	4250	21.4	20.5	19.7
	25 + 60 + 71	1.60	3.85	4.55	—	—	—	3.7	10.0	11.8	880	3260	4250	21.4	20.5	19.7
	35 + 35 + 35	3.33	3.33	3.33	—	—	—	3.7	10.0	10.9	880	3280	4120	15.1	14.4	13.8
	35 + 35 + 50	2.92	2.92	4.17	—	—	—	3.7	10.0	11.8	880	3270	4250	15.0	14.4	13.8
	35 + 35 + 60	2.69	2.69	4.62	—	—	—	3.7	10.0	11.8	880	3270	4250	15.0	14.4	13.8
	35 + 35 + 71	2.48	2.48	5.04	—	—	—	3.7	10.0	11.8	880	3260	4250	14.8	14.2	13.6
	35 + 50 + 50	2.59	3.70	3.70	—	—	—	3.7	10.0	11.8	880	3270	4250	15.0	14.4	13.8
	35 + 50 + 60	2.41	3.45	4.14	—	—	—	3.7	10.0	11.8	880	3260	4250	15.0	14.3	13.7

Cooling operation

Indoor unit combination		Cooling capacity (kW)									Power consumption (W)			Standard current (A)		
		Room cooling capacity (kW)						Total capacity (kW)			Min.	Standard	Max.	220V	230V	240V
		A room	B room	C room	D room	E room	F room	Min.	Standard	Max.						
3 room	35 + 50 + 71	2.24	3.21	4.55	—	—	—	3.7	10.0	11.8	880	3260	4250	15.0	14.3	13.7
	35 + 60 + 60	2.26	3.87	3.87	—	—	—	3.7	10.0	11.8	880	3260	4250	15.0	14.3	13.7
	50 + 50 + 50	3.33	3.33	3.33	—	—	—	3.7	10.0	11.8	880	3260	4250	15.0	14.3	13.7
	50 + 50 + 60	3.13	3.13	3.75	—	—	—	3.7	10.0	11.8	880	3260	4250	15.0	14.3	13.7
4 room	20 + 20 + 20 + 20	2.00	2.00	2.00	2.00	—	—	4.4	8.0	10.8	1100	2110	3680	9.6	9.2	8.8
	20 + 20 + 20 + 25	2.00	2.00	2.00	2.50	—	—	4.4	8.5	11.1	1100	2390	3890	10.9	10.4	10.0
	20 + 20 + 20 + 35	2.00	2.00	2.00	3.50	—	—	4.4	9.5	11.6	1110	2900	3990	13.2	12.6	12.1
	20 + 20 + 20 + 50	1.82	1.82	1.82	4.55	—	—	4.4	10.0	11.8	1100	3210	4050	14.6	14.0	13.4
	20 + 20 + 20 + 60	1.67	1.67	1.67	5.00	—	—	4.4	10.0	11.8	1100	3210	4050	14.6	14.0	13.4
	20 + 20 + 20 + 71	1.53	1.53	1.53	5.42	—	—	4.4	10.0	11.8	1100	3200	4050	14.4	13.8	13.2
	20 + 20 + 25 + 25	2.00	2.00	2.50	2.50	—	—	4.4	9.0	11.6	1100	2600	3990	11.8	11.3	10.8
	20 + 20 + 25 + 35	2.00	2.00	2.50	3.50	—	—	4.4	10.0	11.8	1100	3220	4050	14.7	14.0	13.4
	20 + 20 + 25 + 50	1.74	1.74	2.17	4.35	—	—	4.4	10.0	11.8	1100	3210	4050	14.6	14.0	13.4
	20 + 20 + 25 + 60	1.60	1.60	2.00	4.80	—	—	4.4	10.0	11.8	1100	3210	4050	14.6	14.0	13.4
	20 + 20 + 25 + 71	1.47	1.47	1.84	5.22	—	—	4.4	10.0	11.8	1100	3200	4050	14.6	13.9	13.3
	20 + 20 + 35 + 35	1.82	1.82	3.18	3.18	—	—	4.4	10.0	11.8	1100	3210	4050	14.6	14.0	13.4
	20 + 20 + 35 + 50	1.60	1.60	2.80	4.00	—	—	4.4	10.0	11.8	1100	3210	4050	14.6	14.0	13.4
	20 + 20 + 35 + 60	1.48	1.48	2.59	4.44	—	—	4.4	10.0	11.8	1100	3200	4050	14.6	13.9	13.3
	20 + 20 + 35 + 71	1.37	1.37	2.40	4.86	—	—	4.4	10.0	11.8	1100	3190	4050	14.5	13.9	13.3
	20 + 20 + 50 + 50	1.43	1.43	3.57	3.57	—	—	4.4	10.0	11.8	1100	3190	4050	14.5	13.9	13.3
	20 + 20 + 50 + 60	1.33	1.33	3.33	4.00	—	—	4.4	10.0	11.8	1100	3190	4050	14.5	13.9	13.3
	20 + 20 + 60 + 60	1.25	1.25	3.75	3.75	—	—	4.4	10.0	11.8	1100	3180	4050	14.5	13.8	13.3
	20 + 25 + 25 + 25	2.00	2.50	2.50	2.50	—	—	4.4	9.5	11.8	1100	2900	4050	13.2	12.6	12.1
	20 + 25 + 25 + 35	1.90	2.38	2.38	3.33	—	—	4.4	10.0	11.8	1100	3220	4050	14.7	14.0	13.4
	20 + 25 + 25 + 50	1.67	2.08	2.08	4.17	—	—	4.4	10.0	11.8	1100	3210	4050	14.6	14.0	13.4
	20 + 25 + 25 + 60	1.54	1.92	1.92	4.62	—	—	4.4	10.0	11.8	1100	3200	4050	14.6	13.9	13.3
	20 + 25 + 25 + 71	1.46	1.81	1.81	4.93	—	—	4.4	10.0	11.8	1100	3190	4050	14.5	13.9	13.3
	20 + 25 + 35 + 35	1.74	2.17	3.04	3.04	—	—	4.4	10.0	11.8	1100	3210	4050	14.6	14.0	13.4
	20 + 25 + 35 + 50	1.54	1.92	2.69	3.85	—	—	4.4	10.0	11.8	1100	3200	4050	14.6	13.9	13.3
	20 + 25 + 35 + 60	1.43	1.79	2.50	4.29	—	—	4.4	10.0	11.8	1100	3190	4050	14.5	13.9	13.3
	20 + 25 + 35 + 71	1.32	1.66	2.32	4.70	—	—	4.4	10.0	11.8	1100	3190	4050	14.5	13.9	13.3
	20 + 25 + 50 + 50	1.38	1.72	3.45	3.45	—	—	4.4	10.0	11.8	1100	3190	4050	14.5	13.9	13.3
	20 + 25 + 50 + 60	1.29	1.61	3.23	3.87	—	—	4.4	10.0	11.8	1100	3190	4050	14.5	13.9	13.3
	20 + 35 + 35 + 35	1.60	2.80	2.80	2.80	—	—	4.4	10.0	11.8	1100	3210	4050	14.6	14.0	13.4
	20 + 35 + 35 + 50	1.43	2.50	2.50	3.57	—	—	4.4	10.0	11.8	1100	3190	4050	14.5	13.9	13.3
	20 + 35 + 35 + 60	1.33	2.33	2.33	4.00	—	—	4.4	10.0	11.8	1100	3190	4050	14.5	13.9	13.3
	20 + 35 + 50 + 50	1.29	2.26	3.23	3.23	—	—	4.4	10.0	11.8	1100	3190	4050	14.5	13.9	13.3
	25 + 25 + 25 + 25	2.50	2.50	2.50	2.50	—	—	4.4	10.0	11.8	1100	3220	4050	14.7	14.0	13.4
	25 + 25 + 25 + 35	2.27	2.27	2.27	3.18	—	—	4.4	10.0	11.8	1100	3210	4050	14.6	14.0	13.4
	25 + 25 + 25 + 50	2.00	2.00	2.00	4.00	—	—	4.4	10.0	11.8	1100	3210	4050	14.6	14.0	13.4
	25 + 25 + 25 + 60	1.85	1.85	1.85	4.44	—	—	4.4	10.0	11.8	1100	3200	4050	14.6	13.9	13.3
	25 + 25 + 25 + 71	1.71	1.71	1.71	4.86	—	—	4.4	10.0	11.8	1100	3190	4050	14.5	13.9	13.3
	25 + 25 + 35 + 35	2.08	2.08	2.92	2.92	—	—	4.4	10.0	11.8	1100	3210	4050	14.6	14.0	13.4
	25 + 25 + 35 + 50	1.85	1.85	2.59	3.70	—	—	4.4	10.0	11.8	1100	3200	4050	14.6	13.9	13.3
	25 + 25 + 35 + 60	1.72	1.72	2.41	4.14	—	—	4.4	10.0	11.8	1100	3190	4050	14.5	13.9	13.3
	25 + 25 + 35 + 71	1.60	1.60	2.24	4.55	—	—	4.4	10.0	11.8	1100	3190	4050	14.5	13.9	13.3
	25 + 25 + 50 + 50	1.67	1.67	3.33	3.33	—	—	4.4	10.0	11.8	1100	3190	4050	14.5	13.9	13.3
	25 + 25 + 50 + 60	1.56	1.56	3.13	3.75	—	—	4.4	10.0	11.8	1100	3180	4050	14.5	13.8	13.3
	25 + 35 + 35 + 35	1.92	2.69	2.69	2.69	—	—	4.4	10.0	11.8	1100	3200	4050	14.6	13.9	13.3
	25 + 35 + 35 + 50	1.72	2.41	2.41	3.45	—	—	4.4	10.0	11.8	1100	3190	4050	14.5	13.9	13.3
	25 + 35 + 35 + 60	1.61	2.26	2.26	3.87	—	—	4.4	10.0	11.8	1100	3190	4050	14.5	13.9	13.3
	25 + 35 + 50 + 50	1.56	2.19	3.13	3.13	—	—	4.4	10.0	11.8	1100	3180	4050	14.5	13.8	13.3
	35 + 35 + 35 + 35	2.50	2.50	2.50	2.50	—	—	4.4	10.0	11.8	1100	3190	4050	14.5	13.9	13.3
	35 + 35 + 35 + 50	2.26	2.26	2.26	3.23	—	—	4.4	10.0	11.8	1100	3190	4050	14.5	13.9	13.3
5 room	20 + 20 + 20 + 20 + 20	2.00	2.00	2.00	2.00	2.00	—	5.1	10.0	11.8	1210	2950	4030	13.4	12.8	12.3
	20 + 20 + 20 + 20 + 25	1.90	1.90	1.90	1.90	2.38	—	5.1	10.0	11.8	1210	2950	4030	13.4	12.8	12.3
	20 + 20 + 20 + 20 + 35	1.74	1.74	1.74	1.74	3.04	—	5.1	10.0	11.8	1210	2950	4030	13.4	12.8	12.3
	20 + 20 + 20 + 20 + 50	1.54	1.54	1.54	1.54	3.85	—	5.1	10.0	11.8	1210	2940	4030	13.4	12.8	12.3
	20 + 20 + 20 + 20 + 60	1.43	1.43	1.43	1.43	4.29	—	5.1	10.0	11.8	1210	2930	4030	13.3	12.8	12.2
	20 + 20 + 20 + 20 + 71	1.32	1.32	1.32	1.32	4.70	—	5.1	10.0	11.8	1210	2930	4030	13.3	12.8	12.2
	20 + 20 + 20 + 25 + 25	1.82	1.82	1.82	2.27	2.27	—	5.1	10.0	11.8	1210	2950	4030	13.4	12.8	12.3
	20 + 20 + 20 + 25 + 35	1.67	1.67	1.67	2.08	2.92	—	5.1	10.0	11.8	1210	2940	4030	13.4	12.8	12.3
	20 + 20 + 20 + 25 + 50	1.48	1.48	1.48	1.85	3.70	—	5.1	10.0	11.8	1210	2940	4030	13.4	12.8	12.3
	20 + 20 + 20 + 25 + 60	1.38	1.38	1.38	1.72	4.14	—	5.1	10.0	11.8	1210	2930	4030	13.3	12.8	12.2
	20 + 20 + 20 + 25 + 71	1.28	1.28	1.28	1.60	4.55	—	5.1	10.0	11.8	1210	2930	4030	13.3	12.8	12.2
	20 + 20 + 20 + 35 + 35	1.54	1.54	1.54	2.69	2.69	—	5.1	10.0	11.8	1210	2940	4030	13.4	12.8	12.3
	20 + 20 + 20 + 35 + 50	1.38	1.38	1.38	2.41	3.45	—	5.1	10.0	11.8	1210	2930	4030	13.3	12.8	12.2
	20 + 20 + 20 + 35 + 60	1.29	1.29	1.29	2.26	3.87	—	5.1	10.0	11.8	1210	2930	4030	13.3	12.8	12.2
	20 + 20 + 20 + 50 + 50	1.25	1.25	1.25	3.13	3.13	—	5.1	10.0	11.8	1210	2930	4030	13.3	12.8	12.2
	20 + 20 + 25 + 25 + 25	1.74	1.74	2.17	2.17	2.17	—	5.1	10.0	11.8	1210	2950	4030	13.4	12.8	12.3
	20 + 20 + 25 + 25 + 35	1.60	1.60	2.00	2.00	2.80	—	5.1	10.0	11.8	1210	2940	4030	13.4	12.8	12.3
	20 + 20 + 25 + 25 + 50	1.43	1.43	1.79	1.79	3.57	—	5.1	10.0	11.8	1210	2930	4030	13.3	12.8	12.2
	20 + 20 + 25 + 25 + 60	1.33	1.33	1.67	1.67	4.00	—	5.1	10.0	11.8	1210	2930	4030	13.3	12.8	12.2
	20 + 20 + 25 + 35 + 35	1.48	1.48	1.85	2.59	2.59	—	5.1	10.0	11.8	1210	2940	4030	13.4	12.8	12.3
	20 + 20 + 25 + 35 + 50	1.33	1.33	1.67	2.33	3.33	—	5.1	10.0	11.8	1210	2930	4030	13.3	12.8	12.2
	20 + 20 + 25 + 35 + 60	1.25	1.25	1.56	2.19	3.75	—	5.1	10.0	11.8	1210	2930	4030	13.3	12.8	12.2
	20 + 20 + 35 + 35 + 35	1.38	1.38	2.41	2.41	2.41	—	5.1	10.0	11.8	1210	2930	4030	13.3	12.8	12.2
	20 + 20 + 35 + 35 + 50	1.25	1.25	2.19	2.19	3.13	—	5.1	10.0	11.8	1210	2930	4030	13.3	12.8	12.2
	20 + 25 + 25 + 25 + 25	1.67	2.08	2.08	2.08	2.08	—	5.1	10.0	11.8	1210	2940	4030	13.4	12.8	12.3
	20 + 25 + 25 + 25 + 35	1.54	1.92	1.92	1.92	2.69	—	5.1	10.0	11.8	1210	2940	4030	13.4	12.8	12.3
	20 + 25 + 25 + 25 + 50	1.38	1.72	1.72	1.72	3.45	—	5.1	10.0	11.8	1210	2930	4030	13.3	12.8	12.2
	20 + 25 + 25 + 25 + 60	1.29	1.61	1.61	1.61	3.87	—	5.1	10.0	11.8	1210	2930	4030	13.3	12.8	12.2
	20 + 25 + 25 + 35 + 35	1.43	1.79	1.79	2.50	2.50	—	5.1	10.0	11.8	1210	2930	4030	13.3	12.8	12.2
	20 + 25 + 25 + 35 + 50	1.29	1.61	1.61	2.26	3.23	—	5.1	10.0	11.8	1210	2930	4030	13.3	12.8	12.2
	20 + 25 + 35 + 35 + 35	1.33	1.67	2.33	2.33	2.33	—	5.1	10.0	11.8	1210	2930	4030	13.3	12.8	12.2
	20 + 35 + 35 + 35 + 35	1.25	2.19	2.19	2.19	2.19	—	5.1	10.0	11.8	1210	2930	4030	13.3	12.8	12.2
	25 + 25 + 25 + 25 + 25	2.00	2.00	2.00	2.00	2.00	—	5.1	10.0	11.8	1210	2940	4030	13.4	12.8	12.3
	25 + 25 + 25 + 25 + 35	1.85	1.85	1.85	1.85	2.59	—	5.1	10.0	11.8	1210	2940	4030	13.4	12.8	12.3
	25 + 25 + 25 + 25 + 50	1.67	1.67	1.67	1.67	3.33	—	5.1	10.0	11.8	1210	2930	4030	13.3	12.8	12.2
	25 + 25 + 25 + 25 + 60	1.56	1.56	1.56	1.56	3.75	—	5.1	10.0	11.8	1210	2930	4030	13.3	12.8	12.2
	25 + 25 + 25 + 35 + 35	1.72	1.72	1.72	2.41	2.41	—	5.1	10.0	11.8	1210	2930	4030	13.3	12.8	12.2
	25 + 25 + 25 + 35 + 50	1.56	1.56	1.56	2.19	3.13	—	5.1	10.0	11.8	1210	2930	4030	13.3	12.8	12.2
	25 + 25 + 35 + 35 + 35	1.61	1.61	2.26	2.26	2.26	—	5.1	10.0	11.8	1210	2930	4030	13.3	12.8	12.2

SCM125ZM-S Table of Indoor unit combination with SRK-ZMX-S type only

Indoor unit combination			Heating capacity (kW)									Power consumption (W)			Standard current (A)		
			Room heating capacity (kW)						Total capacity (kW)								
			A room	B room	C room	D room	E room	F room	Min.	Standard	Max.	Min.	Standard	Max.	220V	230V	240V
Heating operation	1 room	20	3.0	—	—	—	—	—	1.5	3.0	3.7	700	1010	1330	4.6	4.4	4.3
		25	3.4	—	—	—	—	—	1.5	3.4	4.2	700	1150	1540	5.3	5.1	4.8
		35	4.5	—	—	—	—	—	1.5	4.5	5.0	700	1540	1840	7.1	6.8	6.5
		50	5.8	—	—	—	—	—	1.5	5.8	6.5	700	2000	2410	9.2	8.8	8.4
		60	6.8	—	—	—	—	—	1.5	6.8	7.5	700	2360	2760	10.8	10.4	9.9
	2 room	20 + 20	3.00	3.00	—	—	—	—	2.1	6.0	7.4	750	1510	1460	6.9	6.6	6.4
		20 + 25	2.84	3.56	—	—	—	—	2.1	6.4	7.9	750	1630	2210	7.5	7.2	6.9
		20 + 35	2.73	4.77	—	—	—	—	2.1	7.5	8.7	750	1950	2520	9.0	8.6	8.2
		20 + 50	2.51	6.29	—	—	—	—	2.1	8.8	10.2	750	2380	3220	10.9	10.5	10.0
		20 + 60	2.45	7.35	—	—	—	—	2.1	9.8	11.2	750	2780	3620	12.8	12.2	11.7
		25 + 25	3.40	3.40	—	—	—	—	2.1	6.8	8.4	750	1740	2420	8.0	7.6	7.3
		25 + 35	3.29	4.61	—	—	—	—	2.1	7.9	9.2	750	2100	2820	9.6	9.2	8.8
		25 + 50	3.07	6.13	—	—	—	—	2.1	9.2	10.7	750	2580	3610	11.8	11.3	10.9
		25 + 60	3.00	7.20	—	—	—	—	2.1	10.2	11.7	750	2980	3790	13.7	13.1	12.5
		35 + 35	4.50	4.50	—	—	—	—	2.1	9.0	10.0	750	2470	3210	11.3	10.8	10.4
		35 + 50	4.24	6.06	—	—	—	—	2.1	10.3	11.5	750	2980	3710	13.7	13.1	12.5
		35 + 60	4.16	7.14	—	—	—	—	2.1	11.3	12.5	750	3350	4320	15.4	14.7	14.1
		50 + 50	5.80	5.80	—	—	—	—	2.1	11.6	13.0	750	3590	4620	16.5	15.8	15.1
		50 + 60	5.73	6.87	—	—	—	—	2.1	12.6	14.0	750	4010	5230	18.4	17.6	16.9
		60 + 60	6.75	6.75	—	—	—	—	2.1	13.5	14.0	750	4450	5230	20.4	19.5	18.7
	3 room	20 + 20 + 20	3.00	3.00	3.00	—	—	—	3.2	9.0	11.1	780	2230	3350	10.2	9.8	9.4
		20 + 20 + 25	2.89	2.89	3.62	—	—	—	3.2	9.4	11.6	780	2350	3550	10.8	10.3	9.9
		20 + 20 + 35	2.80	2.80	4.90	—	—	—	3.2	10.5	12.4	780	2710	3820	12.4	11.9	11.4
		20 + 20 + 50	2.62	2.62	6.56	—	—	—	3.2	11.8	13.9	780	3210	4290	14.7	14.1	13.5
		20 + 20 + 60	2.56	2.56	7.68	—	—	—	3.2	12.8	14.0	780	3620	4350	16.6	15.9	15.2
		20 + 25 + 25	2.80	3.50	3.50	—	—	—	3.2	9.8	12.1	780	2510	3720	11.5	11.0	10.6
		20 + 25 + 35	2.73	3.41	4.77	—	—	—	3.2	10.9	12.9	780	2910	3990	13.4	12.8	12.2
		20 + 25 + 50	2.57	3.21	6.42	—	—	—	3.2	12.2	14.0	780	3410	4350	15.7	15.0	14.4
		20 + 25 + 60	2.51	3.14	7.54	—	—	—	3.2	13.2	14.0	780	3910	4350	18.0	17.2	16.5
		20 + 35 + 35	2.67	4.67	4.67	—	—	—	3.2	12.0	13.7	780	3390	4220	15.6	14.9	14.3
		20 + 35 + 50	2.53	4.43	6.33	—	—	—	3.2	13.3	14.0	780	3900	4350	17.9	17.1	16.4
		20 + 35 + 60	2.35	4.11	7.04	—	—	—	3.2	13.5	14.0	780	4050	4350	18.6	17.8	17.0
		20 + 50 + 50	2.25	5.63	5.63	—	—	—	3.2	13.5	14.0	780	4050	4350	18.6	17.8	17.0
		20 + 50 + 60	2.08	5.19	6.23	—	—	—	3.2	13.5	14.0	780	4050	4350	18.6	17.8	17.0
		20 + 60 + 60	1.93	5.79	5.79	—	—	—	3.2	13.5	14.0	780	4050	4350	18.6	17.8	17.0
		25 + 25 + 25	3.40	3.40	3.40	—	—	—	3.2	10.2	12.6	780	2710	3880	12.4	11.9	11.4
		25 + 25 + 35	3.32	3.32	4.65	—	—	—	3.2	11.3	13.4	780	3110	4120	14.3	13.7	13.1
		25 + 25 + 50	3.15	3.15	6.30	—	—	—	3.2	12.6	14.0	780	3620	4350	16.6	15.9	15.2
		25 + 25 + 60	3.07	3.07	7.36	—	—	—	3.2	13.5	14.0	780	4050	4350	18.6	17.8	17.0
		25 + 35 + 35	3.26	4.57	4.57	—	—	—	3.2	12.4	14.0	780	3710	4350	17.0	16.3	15.6
		25 + 35 + 50	3.07	4.30	6.14	—	—	—	3.2	13.5	14.0	780	4060	4350	18.6	17.8	17.1
		25 + 35 + 60	2.81	3.94	6.75	—	—	—	3.2	13.5	14.0	780	4060	4350	18.6	17.8	17.1
		25 + 50 + 50	2.70	5.40	5.40	—	—	—	3.2	13.5	14.0	780	4050	4350	18.6	17.8	17.0
		25 + 50 + 60	2.50	5.00	6.00	—	—	—	3.2	13.5	14.0	780	4050	4350	18.6	17.8	17.0
		25 + 60 + 60	2.33	5.59	5.59	—	—	—	3.2	13.5	14.0	780	4050	4350	18.6	17.8	17.0
		35 + 35 + 35	4.50	4.50	4.50	—	—	—	3.2	13.5	14.0	780	4060	4350	18.6	17.8	17.1
		35 + 35 + 50	3.94	3.94	5.63	—	—	—	3.2	13.5	14.0	780	4060	4350	18.6	17.8	17.1
		35 + 35 + 60	3.63	3.63	6.23	—	—	—	3.2	13.5	14.0	780	4050	4350	18.6	17.8	17.0
		35 + 50 + 50	3.50	5.00	5.00	—	—	—	3.2	13.5	14.0	780	4050	4350	18.6	17.8	17.0
		35 + 50 + 60	3.26	4.66	5.59	—	—	—	3.2	13.5	14.0	780	4050	4350	18.6	17.8	17.0
		35 + 60 + 60	3.05	5.23	5.23	—	—	—	3.2	13.5	14.0	780	4050	4350	18.6	17.8	17.0
		50 + 50 + 50	4.50	4.50	4.50	—	—	—	3.2	13.5	14.0	780	4040	4350	18.5	17.7	17.0
		50 + 50 + 60	4.22	4.22	5.06	—	—	—	3.2	13.5	14.0	780	4040	4350	18.5	17.7	17.0
		50 + 60 + 60	3.97	4.76	4.76	—	—	—	3.2	13.5	14.0	780	4040	4350	18.5	17.7	17.0
		60 + 60 + 60	4.50	4.50	4.50	—	—	—	3.2	13.5	14.0	780	4030	4350	18.5	17.7	17.0
	4 room	20 + 20 + 20 + 20	3.00	3.00	3.00	3.00	—	—	3.6	12.0	14.0	950	3210	3920	14.6	14.0	13.4
		20 + 20 + 20 + 25	2.92	2.92	2.92	3.65	—	—	3.6	12.4	14.0	950	3390	3920	15.4	14.8	14.1
		20 + 20 + 20 + 35	2.84	2.84	2.84	4.97	—	—	3.6	13.5	14.0	950	3700	3920	16.8	16.1	15.4
		20 + 20 + 20 + 50	2.45	2.45	2.45	6.14	—	—	3.6	13.5	14.0	950	3690	3920	16.8	16.1	15.4
		20 + 20 + 20 + 60	2.25	2.25	2.25	6.75	—	—	3.6	13.5	14.0	950	3690	3920	16.8	16.1	15.4
		20 + 20 + 25 + 25	2.84	2.84	3.56	3.56	—	—	3.6	12.8	14.0	950	3440	3920	15.7	15.0	14.3
		20 + 20 + 25 + 35	2.70	2.70	3.38	4.73	—	—	3.6	13.5	14.0	950	3700	3920	16.8	16.1	15.4
		20 + 20 + 25 + 50	2.35	2.35	2.93	5.87	—	—	3.6	13.5	14.0	950	3690	3920	16.8	16.1	15.4
		20 + 20 + 25 + 60	2.16	2.16	2.70	6.48	—	—	3.6	13.5	14.0	950	3680	3920	16.7	16.0	15.3
		20 + 20 + 35 + 35	2.45	2.45	4.30	4.30	—	—	3.6	13.5	14.0	950	3690	3920	16.8	16.1	15.4
		20 + 20 + 35 + 50	2.16	2.16	3.78	5.40	—	—	3.6	13.5	14.0	950	3680	3920	16.7	16.0	15.3
		20 + 20 + 35 + 60	2.00	2.00	3.50	6.00	—	—	3.6	13.5	14.0	950	3680	3920	16.7	16.0	15.3
		20 + 20 + 50 + 50	1.93	1.93	4.82	4.82	—	—	3.6	13.5	14.0	950	3670	3920	16.7	16.0	15.3
		20 + 20 + 50 + 60	1.80	1.80	4.50	5.40	—	—	3.6	13.5	14.0	950	3670	3920	16.7	16.0	15.3
		20 + 20 + 60 + 60	1.69	1.69	5.06	5.06	—	—	3.6	13.5	14.0	950	3670	3920	16.7	16.0	15.3
		20 + 25 + 25 + 25	2.78	3.47	3.47	3.47	—	—	3.6	13.2	14.0	950	3550	3920	16.2	15.5	14.8
		20 + 25 + 25 + 35	2.57	3.21	3.21	4.50	—	—	3.6	13.5	14.0	950	3700	3920	16.8	16.1	15.4
		20 + 25 + 25 + 50	2.25	2.81	2.81	5.63	—	—	3.6	13.5	14.0	950	3690	3920	16.8	16.1	15.4
		20 + 25 + 25 + 60	2.08	2.60	2.60	6.23	—	—	3.6	13.5	14.0	950	3680	3920	16.7	16.0	15.3
		20 + 25 + 35 + 35	2.35	2.93	4.11	4.11	—	—	3.6	13.5	14.0	950	3690	3920	16.8	16.1	15.4
		20 + 25 + 35 + 50	2.08	2.60	3.63	5.19	—	—	3.6	13.5	14.0	950	3680	3920	16.7	16.0	15.3
		20 + 25 + 35 + 60	1.93	2.41	3.38	5.79	—	—	3.6	13.5	14.0	950	3670	3920	16.7	16.0	15.3
		20 + 25 + 50 + 50	1.86	2.33	4.66	4.66	—	—	3.6	13.5	14.0	950	3670	3920	16.7	16.0	15.3
		20 + 25 + 50 + 60	1.74	2.18	4.35	5.23	—	—	3.6	13.5	14.0	950	3670	3920	16.7	16.0	15.3
		20 + 25 + 60 + 60	1.64	2.05	4.91	4.91	—	—	3.6	13.5	14.0	950	3660	3920	16.7	15.9	15.3
		20 + 35 + 35 + 35	2.16	3.78	3.78	3.78	—	—	3.6	13.5	14.0	950	3680	3920	16.7	16.0	15.3
		20 + 35 + 35 + 50	1.93	3.38	3.38	4.82	—	—	3.6	13.5	14.0	950	3670	3920	16.7	16.0	15.3
		20 + 35 + 35 + 60	1.80	3.15	3.15	5.40	—	—	3.6	13.5	14.0	950	3670	3920	16.7	16.0	15.3
		20 + 35 + 50 + 50	1.74	3.05	4.35	4.35	—	—	3.6	13.5	14.0	950	3670	3920	16.7	16.0	15.3
		20 + 35 + 50 + 60	1.64	2.86	4.09	4.91	—	—	3.6	13.5	14.0	950	3660	3920	16.7	15.9	15.3
		20 + 35 + 60 + 60	1.54	2.70	4.63	4.63	—	—	3.6	13.5	14.0	950	3660	3920	16.7	15.9	15.3
		20 + 50 + 50 + 50	1.59	3.97	3.97	3.97	—	—	3.6	13.5	14.0	950	3660	3920	16.7	15.9	15.3
		20 + 50 + 50 + 60	1.50	3.75	3.75	4.50	—	—	3.6	13.5	14.0	950	3660	3920	16.7	15.9	15.3
		20 + 50 + 60 + 60	1.42	3.55	4.26	4.26	—	—	3.6	13.5	14.0	950	3650	3920	16.6	15.9	15.2
		25 + 25 + 25 + 25	3.38	3.38	3.38	3.38	—	—	3.6	13.5	14.0	950	3700	3920	16.8	16.1	15.4
		25 + 25 + 25 + 35	3.07	3.07	3.07	4.30	—	—	3.6	13.5	14.0	950	3690	3920	16.8	16.1	15.4
		25 + 25 + 25 + 50	2.70	2.70	2.70	5.40	—	—	3.6	13.5	14.0	950	3680	3920	16.7	16.0	15.3
		25 + 25 + 25 + 60	2.50	2.50	2.50	6.00	—	—	3.6	13.5	14.0	950	3680	3920	16.7	16.0	15.3

		Indoor unit combination	Heating capacity (kW)									Power consumption (W)			Standard current (A)		
			Room heating capacity (kW)						Total capacity (kW)								
			A room	B room	C room	D room	E room	F room	Min.	Standard	Max.	Min.	Standard	Max.	220V	230V	240V
Heating operation	4 room	25 + 25 + 35 + 35	2.81	2.81	3.94	3.94	—	—	3.6	13.5	14.0	950	3690	3920	16.8	16.1	15.4
		25 + 25 + 35 + 50	2.50	2.50	3.50	5.00	—	—	3.6	13.5	14.0	950	3680	3920	16.7	16.0	15.3
		25 + 25 + 35 + 60	2.33	2.33	3.26	5.59	—	—	3.6	13.5	14.0	950	3670	3920	16.7	16.0	15.3
		25 + 25 + 50 + 50	2.25	2.25	4.50	4.50	—	—	3.6	13.5	14.0	950	3670	3920	16.7	16.0	15.3
		25 + 25 + 50 + 60	2.11	2.11	4.22	5.06	—	—	3.6	13.5	14.0	950	3670	3920	16.7	16.0	15.3
		25 + 25 + 60 + 60	1.99	1.99	4.76	4.76	—	—	3.6	13.5	14.0	950	3660	3920	16.7	15.9	15.3
		25 + 35 + 35 + 35	2.60	3.63	3.63	3.63	—	—	3.6	13.5	14.0	950	3680	3920	16.7	16.0	15.3
		25 + 35 + 35 + 50	2.33	3.26	3.26	4.66	—	—	3.6	13.5	14.0	950	3670	3920	16.7	16.0	15.3
		25 + 35 + 35 + 60	2.18	3.05	3.05	5.23	—	—	3.6	13.5	14.0	950	3670	3920	16.7	16.0	15.3
		25 + 35 + 50 + 50	2.11	2.95	4.22	4.22	—	—	3.6	13.5	14.0	950	3670	3920	16.7	16.0	15.3
		25 + 35 + 50 + 60	1.99	2.78	3.97	4.76	—	—	3.6	13.5	14.0	950	3660	3920	16.7	15.9	15.3
		25 + 35 + 60 + 60	1.88	2.63	4.50	4.50	—	—	3.6	13.5	14.0	950	3660	3920	16.7	15.9	15.3
		25 + 50 + 50 + 50	1.93	3.86	3.86	3.86	—	—	3.6	13.5	14.0	950	3660	3920	16.7	15.9	15.3
		25 + 50 + 50 + 60	1.82	3.65	3.65	4.38	—	—	3.6	13.5	14.0	950	3650	3920	16.6	15.9	15.2
		25 + 50 + 60 + 60	1.73	3.46	4.15	4.15	—	—	3.6	13.5	14.0	950	3650	3920	16.6	15.9	15.2
		35 + 35 + 35 + 35	3.38	3.38	3.38	3.38	—	—	3.6	13.5	14.0	950	3670	3920	16.7	16.0	15.3
		35 + 35 + 35 + 50	3.05	3.05	3.05	4.35	—	—	3.6	13.5	14.0	950	3670	3920	16.7	16.0	15.3
		35 + 35 + 35 + 60	2.86	2.86	2.86	4.91	—	—	3.6	13.5	14.0	950	3660	3920	16.7	15.9	15.3
		35 + 35 + 50 + 50	2.78	2.78	3.97	3.97	—	—	3.6	13.5	14.0	950	3660	3920	16.7	15.9	15.3
		35 + 35 + 50 + 60	2.63	2.63	3.75	4.50	—	—	3.6	13.5	14.0	950	3660	3920	16.7	15.9	15.3
		35 + 35 + 60 + 60	2.49	2.49	4.26	4.26	—	—	3.6	13.5	14.0	950	3650	3920	16.6	15.9	15.2
		35 + 50 + 50 + 50	2.55	3.65	3.65	3.65	—	—	3.6	13.5	14.0	950	3650	3920	16.6	15.9	15.2
		35 + 50 + 50 + 60	2.42	3.46	3.46	4.15	—	—	3.6	13.5	14.0	950	3650	3920	16.6	15.9	15.2
	5 room	20 + 20 + 20 + 20 + 20	2.70	2.70	2.70	2.70	2.70	—	4.0	13.5	14.0	1050	3380	3470	15.4	14.7	14.1
		20 + 20 + 20 + 20 + 25	2.57	2.57	2.57	2.57	3.21	—	4.0	13.5	14.0	1050	3380	3470	15.4	14.7	14.1
		20 + 20 + 20 + 20 + 35	2.35	2.35	2.35	2.35	4.11	—	4.0	13.5	14.0	1050	3370	3470	15.3	14.7	14.1
		20 + 20 + 20 + 20 + 50	2.08	2.08	2.08	2.08	5.19	—	4.0	13.5	14.0	1050	3360	3470	15.3	14.6	14.0
		20 + 20 + 20 + 20 + 60	1.93	1.93	1.93	1.93	5.79	—	4.0	13.5	14.0	1050	3360	3470	15.3	14.6	14.0
		20 + 20 + 20 + 25 + 25	2.45	2.45	2.45	3.07	3.07	—	4.0	13.5	14.0	1050	3380	3470	15.4	14.7	14.1
		20 + 20 + 20 + 25 + 35	2.25	2.25	2.25	2.81	3.94	—	4.0	13.5	14.0	1050	3370	3470	15.3	14.7	14.1
		20 + 20 + 20 + 25 + 50	2.00	2.00	2.00	2.50	5.00	—	4.0	13.5	14.0	1050	3360	3470	15.3	14.6	14.0
		20 + 20 + 20 + 25 + 60	1.86	1.86	1.86	2.33	5.59	—	4.0	13.5	14.0	1050	3350	3470	15.2	14.6	14.0
		20 + 20 + 20 + 35 + 35	2.08	2.08	2.08	3.63	3.63	—	4.0	13.5	14.0	1050	3360	3470	15.3	14.6	14.0
		20 + 20 + 20 + 35 + 50	1.86	1.86	1.86	3.26	4.66	—	4.0	13.5	14.0	1050	3350	3470	15.2	14.6	14.0
		20 + 20 + 20 + 35 + 60	1.74	1.74	1.74	3.05	5.23	—	4.0	13.5	14.0	1050	3350	3470	15.2	14.6	14.0
		20 + 20 + 20 + 50 + 50	1.69	1.69	1.69	4.22	4.22	—	4.0	13.5	14.0	1050	3340	3470	15.2	14.5	13.9
		20 + 20 + 20 + 50 + 60	1.59	1.59	1.59	3.97	4.76	—	4.0	13.5	14.0	1050	3340	3470	15.2	14.5	13.9
		20 + 20 + 20 + 60 + 60	1.50	1.50	1.50	4.50	4.50	—	4.0	13.5	14.0	1050	3330	3470	15.2	14.5	13.9
		20 + 20 + 25 + 25 + 25	2.35	2.35	2.93	2.93	2.93	—	4.0	13.5	14.0	1050	3370	3470	15.3	14.7	14.1
		20 + 20 + 25 + 25 + 35	2.16	2.16	2.70	2.70	3.78	—	4.0	13.5	14.0	1050	3370	3470	15.3	14.7	14.1
		20 + 20 + 25 + 25 + 50	1.93	1.93	2.41	2.41	4.82	—	4.0	13.5	14.0	1050	3360	3470	15.3	14.6	14.0
		20 + 20 + 25 + 25 + 60	1.80	1.80	2.25	2.25	5.40	—	4.0	13.5	14.0	1050	3350	3470	15.2	14.6	14.0
		20 + 20 + 25 + 35 + 35	2.00	2.00	2.50	3.50	3.50	—	4.0	13.5	14.0	1050	3360	3470	15.3	14.6	14.0
		20 + 20 + 25 + 35 + 50	1.80	1.80	2.25	3.15	4.50	—	4.0	13.5	14.0	1050	3350	3470	15.2	14.6	14.0
		20 + 20 + 25 + 35 + 60	1.69	1.69	2.11	2.95	5.06	—	4.0	13.5	14.0	1050	3340	3470	15.2	14.5	13.9
		20 + 20 + 25 + 50 + 50	1.64	1.64	2.05	4.09	4.09	—	4.0	13.5	14.0	1050	3340	3470	15.2	14.5	13.9
		20 + 20 + 25 + 50 + 60	1.54	1.54	1.93	3.86	4.63	—	4.0	13.5	14.0	1050	3340	3470	15.2	14.5	13.9
		20 + 20 + 25 + 60 + 60	1.46	1.46	1.82	4.38	4.38	—	4.0	13.5	14.0	1050	3330	3470	15.2	14.5	13.9
		20 + 20 + 35 + 35 + 35	1.86	1.86	3.26	3.26	3.26	—	4.0	13.5	14.0	1050	3350	3470	15.2	14.6	14.0
		20 + 20 + 35 + 35 + 50	1.69	1.69	2.95	2.95	4.22	—	4.0	13.5	14.0	1050	3340	3470	15.2	14.5	13.9
		20 + 20 + 35 + 35 + 60	1.59	1.59	2.78	2.78	4.76	—	4.0	13.5	14.0	1050	3340	3470	15.2	14.5	13.9
		20 + 20 + 35 + 50 + 50	1.54	1.54	2.70	3.86	3.86	—	4.0	13.5	14.0	1050	3340	3470	15.2	14.5	13.9
		20 + 20 + 35 + 50 + 60	1.46	1.46	2.55	3.65	4.38	—	4.0	13.5	14.0	1050	3330	3470	15.2	14.5	13.9
		20 + 20 + 35 + 60 + 60	1.38	1.38	2.42	4.15	4.15	—	4.0	13.5	14.0	1050	3320	3470	15.1	14.4	13.8
		20 + 20 + 50 + 50 + 50	1.42	1.42	3.55	3.55	3.55	—	4.0	13.5	14.0	1050	3320	3470	15.1	14.4	13.8
		20 + 25 + 25 + 25 + 25	2.25	2.81	2.81	2.81	2.81	—	4.0	13.5	14.0	1050	3370	3470	15.3	14.7	14.1
		20 + 25 + 25 + 25 + 35	2.08	2.60	2.60	2.60	3.63	—	4.0	13.5	14.0	1050	3360	3470	15.3	14.6	14.0
		20 + 25 + 25 + 25 + 50	1.86	2.33	2.33	2.33	4.66	—	4.0	13.5	14.0	1050	3350	3470	15.2	14.6	14.0
		20 + 25 + 25 + 25 + 60	1.74	2.18	2.18	2.18	5.23	—	4.0	13.5	14.0	1050	3350	3470	15.2	14.6	14.0
		20 + 25 + 25 + 35 + 35	1.93	2.41	2.41	3.38	3.38	—	4.0	13.5	14.0	1050	3360	3470	15.3	14.6	14.0
		20 + 25 + 25 + 35 + 50	1.74	2.18	2.18	3.05	4.35	—	4.0	13.5	14.0	1050	3350	3470	15.2	14.6	14.0
		20 + 25 + 25 + 35 + 60	1.64	2.05	2.05	2.86	4.91	—	4.0	13.5	14.0	1050	3340	3470	15.2	14.5	13.9
		20 + 25 + 25 + 50 + 50	1.59	1.99	1.99	3.97	3.97	—	4.0	13.5	14.0	1050	3340	3470	15.2	14.5	13.9
		20 + 25 + 25 + 50 + 60	1.50	1.88	1.88	3.75	4.50	—	4.0	13.5	14.0	1050	3330	3470	15.2	14.5	13.9
		20 + 25 + 25 + 60 + 60	1.42	1.78	1.78	4.26	4.26	—	4.0	13.5	14.0	1050	3320	3470	15.1	14.4	13.8
		20 + 25 + 35 + 35 + 35	1.80	2.25	3.15	3.15	3.15	—	4.0	13.5	14.0	1050	3350	3470	15.2	14.6	14.0
		20 + 25 + 35 + 35 + 50	1.64	2.05	2.86	2.86	4.09	—	4.0	13.5	14.0	1050	3340	3470	15.2	14.5	13.9
		20 + 25 + 35 + 35 + 60	1.54	1.93	2.70	2.70	4.63	—	4.0	13.5	14.0	1050	3340	3470	15.2	14.5	13.9
		20 + 25 + 35 + 50 + 50	1.50	1.88	2.63	3.75	3.75	—	4.0	13.5	14.0	1050	3330	3470	15.2	14.5	13.9
		20 + 25 + 35 + 50 + 60	1.42	1.78	2.49	3.55	4.26	—	4.0	13.5	14.0	1050	3320	3470	15.1	14.4	13.8
		20 + 25 + 50 + 50 + 50	1.38	1.73	3.46	3.46	3.46	—	4.0	13.5	14.0	1050	3320	3470	15.1	14.4	13.8
		20 + 35 + 35 + 35 + 35	1.69	2.95	2.95	2.95	2.95	—	4.0	13.5	14.0	1050	3340	3470	15.2	14.5	13.9
		20 + 35 + 35 + 35 + 50	1.54	2.70	2.70	2.70	3.86	—	4.0	13.5	14.0	1050	3340	3470	15.2	14.5	13.9
		20 + 35 + 35 + 35 + 60	1.46	2.55	2.55	2.55	4.38	—	4.0	13.5	14.0	1050	3330	3470	15.2	14.5	13.9
		20 + 35 + 35 + 50 + 50	1.42	2.49	2.49	3.55	3.55	—	4.0	13.5	14.0	1050	3320	3470	15.1	14.4	13.8
		25 + 25 + 25 + 25 + 25	2.70	2.70	2.70	2.70	2.70	—	4.0	13.5	14.0	1050	3370	3470	15.3	14.7	14.1
		25 + 25 + 25 + 25 + 35	2.50	2.50	2.50	2.50	3.50	—	4.0	13.5	14.0	1050	3360	3470	15.3	14.6	14.0
		25 + 25 + 25 + 25 + 50	2.25	2.25	2.25	2.25	4.50	—	4.0	13.5	14.0	1050	3350	3470	15.2	14.6	14.0
		25 + 25 + 25 + 25 + 60	2.11	2.11	2.11	2.11	5.06	—	4.0	13.5	14.0	1050	3340	3470	15.2	14.5	13.9
		25 + 25 + 25 + 35 + 35	2.33	2.33	2.33	3.26	3.26	—	4.0	13.5	14.0	1050	3350	3470	15.2	14.6	14.0
		25 + 25 + 25 + 35 + 50	2.11	2.11	2.11	2.95	4.22	—	4.0	13.5	14.0	1050	3340	3470	15.2	14.5	13.9
		25 + 25 + 25 + 35 + 60	1.99	1.99	1.99	2.78	4.76	—	4.0	13.5	14.0	1050	3340	3470	15.2	14.5	13.9
		25 + 25 + 25 + 50 + 50	1.93	1.93	1.93	3.86	3.86	—	4.0	13.5	14.0	1050	3340	3470	15.2	14.5	13.9
		25 + 25 + 25 + 50 + 60	1.82	1.82	1.82	3.65	4.38	—	4.0	13.5	14.0	1050	3330	3470	15.2	14.5	13.9
		25 + 25 + 25 + 60 + 60	1.73	1.73	1.73	4.15	4.15	—	4.0	13.5	14.0	1050	3320	3470	15.1	14.4	13.8
		25 + 25 + 35 + 35 + 35	2.18	2.18	3.05	3.05	3.05	—	4.0	13.5	14.0	1050	3350	3470	15.2	14.6	14.0
		25 + 25 + 35 + 35 + 50	1.99	1.99	2.78	2.78	3.97	—	4.0	13.5	14.0	1050	3340	3470	15.2	14.5	13.9
		25 + 25 + 35 + 35 + 60	1.88	1.88	2.63	2.63	4.50	—	4.0	13.5	14.0	1050	3330	3470	15.2	14.5	13.9
		25 + 25 + 35 + 50 + 50	1.82	1.82	2.55	3.65	3.65	—	4.0	13.5	14.0	1050	3330	3470	15.2	14.5	13.9
		25 + 25 + 35 + 50 + 60	1.73	1.73	2.42	3.46	4.15	—	4.0	13.5	14.0	1050	3320	3470	15.1	14.4	13.8
		25 + 35 + 35 + 35 + 35	2.05	2.86	2.86	2.86	2.86	—	4.0	13.5	14.0	1050	3340	3470	15.2	14.5	13.9
		25 + 35 + 35 + 35 + 50	1.88	2.63	2.63	2.63	3.75	—	4.0	13.5	14.0	1050	3330	3470	15.2	14.5	13.9
		25 + 35 + 35 + 35 + 60	1.78	2.49	2.49	2.49	4.26	—	4.0	13.5	14.0	1050	3320	3470	15.1	14.4	13.8

Heating operation

Indoor unit combination			Heating capacity (kW)									Power consumption (W)			Standard current (A)		
			Room heating capacity (kW)						Total capacity (kW)			Min.	Standard	Max.	220V	230V	240V
			A room	B room	C room	D room	E room	F room	Min.	Standard	Max.						
Heating operation	5 room	25 + 35 + 35 + 50 + 50	1.73	2.42	2.42	3.46	3.46	—	4.0	13.5	14.0	1050	3320	3470	15.1	14.4	13.8
		35 + 35 + 35 + 35 + 35	2.70	2.70	2.70	2.70	2.70	—	4.0	13.5	14.0	1050	3340	3470	15.2	14.5	13.9
		35 + 35 + 35 + 35 + 50	2.49	2.49	2.49	2.49	3.55	—	4.0	13.5	14.0	1050	3320	3470	15.1	14.4	13.8
	6 room	20 + 20 + 20 + 20 + 20 + 20	2.25	2.25	2.25	2.25	2.25	2.25	4.5	13.5	14.0	1150	3260	3420	14.8	14.2	13.6
		20 + 20 + 20 + 20 + 20 + 25	2.16	2.16	2.16	2.16	2.16	2.70	4.5	13.5	14.0	1150	3250	3420	14.8	14.1	13.6
		20 + 20 + 20 + 20 + 20 + 35	2.00	2.00	2.00	2.00	2.00	3.50	4.5	13.5	14.0	1150	3250	3420	14.8	14.1	13.6
		20 + 20 + 20 + 20 + 20 + 50	1.80	1.80	1.80	1.80	1.80	4.50	4.5	13.5	14.0	1150	3250	3420	14.8	14.1	13.6
		20 + 20 + 20 + 20 + 20 + 60	1.69	1.69	1.69	1.69	1.69	5.06	4.5	13.5	14.0	1150	3240	3420	14.7	14.1	13.5
		20 + 20 + 20 + 20 + 25 + 25	2.08	2.08	2.08	2.08	2.60	2.60	4.5	13.5	14.0	1150	3250	3420	14.8	14.1	13.6
		20 + 20 + 20 + 20 + 25 + 35	1.93	1.93	1.93	1.93	2.41	3.38	4.5	13.5	14.0	1150	3250	3420	14.8	14.1	13.6
		20 + 20 + 20 + 20 + 25 + 50	1.74	1.74	1.74	1.74	2.18	4.35	4.5	13.5	14.0	1150	3240	3420	14.7	14.1	13.5
		20 + 20 + 20 + 20 + 25 + 60	1.64	1.64	1.64	1.64	2.05	4.91	4.5	13.5	14.0	1150	3240	3420	14.7	14.1	13.5
		20 + 20 + 20 + 20 + 35 + 35	1.80	1.80	1.80	1.80	3.15	3.15	4.5	13.5	14.0	1150	3250	3420	14.8	14.1	13.6
		20 + 20 + 20 + 20 + 35 + 50	1.64	1.64	1.64	1.64	2.86	4.09	4.5	13.5	14.0	1150	3240	3420	14.7	14.1	13.5
		20 + 20 + 20 + 20 + 35 + 60	1.54	1.54	1.54	1.54	2.70	4.63	4.5	13.5	14.0	1150	3230	3420	14.7	14.1	13.5
		20 + 20 + 20 + 20 + 50 + 50	1.50	1.50	1.50	1.50	3.75	3.75	4.5	13.5	14.0	1150	3230	3420	14.7	14.1	13.5
		20 + 20 + 20 + 20 + 50 + 60	1.42	1.42	1.42	1.42	3.55	4.26	4.5	13.5	14.0	1150	3230	3420	14.7	14.1	13.5
		20 + 20 + 20 + 25 + 25 + 25	2.00	2.00	2.00	2.50	2.50	2.50	4.5	13.5	14.0	1150	3250	3420	14.8	14.1	13.6
		20 + 20 + 20 + 25 + 25 + 35	1.86	1.86	1.86	2.33	2.33	3.26	4.5	13.5	14.0	1150	3250	3420	14.8	14.1	13.6
		20 + 20 + 20 + 25 + 25 + 50	1.69	1.69	1.69	2.11	2.11	4.22	4.5	13.5	14.0	1150	3240	3420	14.7	14.1	13.5
		20 + 20 + 20 + 25 + 25 + 60	1.59	1.59	1.59	1.99	1.99	4.76	4.5	13.5	14.0	1150	3240	3420	14.7	14.1	13.5
		20 + 20 + 20 + 25 + 35 + 35	1.74	1.74	1.74	2.18	3.05	3.05	4.5	13.5	14.0	1150	3240	3420	14.7	14.1	13.5
		20 + 20 + 20 + 25 + 35 + 50	1.59	1.59	1.59	1.99	2.78	3.97	4.5	13.5	14.0	1150	3240	3420	14.7	14.1	13.5
		20 + 20 + 20 + 25 + 35 + 60	1.50	1.50	1.50	1.88	2.63	4.50	4.5	13.5	14.0	1150	3230	3420	14.7	14.1	13.5
		20 + 20 + 20 + 25 + 50 + 50	1.46	1.46	1.46	1.82	3.65	3.65	4.5	13.5	14.0	1150	3230	3420	14.7	14.1	13.5
		20 + 20 + 20 + 25 + 50 + 60	1.38	1.38	1.38	1.73	3.46	4.15	4.5	13.5	14.0	1150	3220	3420	14.7	14.0	13.4
		20 + 20 + 20 + 35 + 35 + 35	1.64	1.64	1.64	2.86	2.86	2.86	4.5	13.5	14.0	1150	3240	3420	14.7	14.1	13.5
		20 + 20 + 20 + 35 + 35 + 50	1.50	1.50	1.50	2.63	2.63	3.75	4.5	13.5	14.0	1150	3230	3420	14.7	14.1	13.5
		20 + 20 + 20 + 35 + 35 + 60	1.42	1.42	1.42	2.49	2.49	4.26	4.5	13.5	14.0	1150	3230	3420	14.7	14.1	13.5
		20 + 20 + 20 + 35 + 50 + 50	1.38	1.38	1.38	2.42	3.46	3.46	4.5	13.5	14.0	1150	3220	3420	14.7	14.0	13.4
		20 + 20 + 25 + 25 + 25 + 25	1.93	1.93	2.41	2.41	2.41	2.41	4.5	13.5	14.0	1150	3250	3420	14.8	14.1	13.6
		20 + 20 + 25 + 25 + 25 + 35	1.80	1.80	2.25	2.25	2.25	3.15	4.5	13.5	14.0	1150	3250	3420	14.8	14.1	13.6
		20 + 20 + 25 + 25 + 25 + 50	1.64	1.64	2.05	2.05	2.05	4.09	4.5	13.5	14.0	1150	3240	3420	14.7	14.1	13.5
		20 + 20 + 25 + 25 + 25 + 60	1.54	1.54	1.93	1.93	1.93	4.63	4.5	13.5	14.0	1150	3230	3420	14.7	14.1	13.5
		20 + 20 + 25 + 25 + 35 + 35	1.69	1.69	2.11	2.11	2.95	2.95	4.5	13.5	14.0	1150	3240	3420	14.7	14.1	13.5
		20 + 20 + 25 + 25 + 35 + 50	1.54	1.54	1.93	1.93	2.70	3.86	4.5	13.5	14.0	1150	3230	3420	14.7	14.1	13.5
		20 + 20 + 25 + 25 + 35 + 60	1.46	1.46	1.82	1.82	2.55	4.38	4.5	13.5	14.0	1150	3230	3420	14.7	14.1	13.5
		20 + 20 + 25 + 25 + 50 + 50	1.42	1.42	1.78	1.78	3.55	3.55	4.5	13.5	14.0	1150	3230	3420	14.7	14.1	13.5
		20 + 20 + 25 + 35 + 35 + 35	1.59	1.59	1.99	2.78	2.78	2.78	4.5	13.5	14.0	1150	3240	3420	14.7	14.1	13.5
		20 + 20 + 25 + 35 + 35 + 50	1.46	1.46	1.82	2.55	2.55	3.65	4.5	13.5	14.0	1150	3230	3420	14.7	14.1	13.5
		20 + 20 + 25 + 35 + 35 + 60	1.38	1.38	1.73	2.42	2.42	4.15	4.5	13.5	14.0	1150	3220	3420	14.7	14.0	13.4
		20 + 20 + 35 + 35 + 35 + 35	1.50	1.50	2.63	2.63	2.63	2.63	4.5	13.5	14.0	1150	3230	3420	14.7	14.1	13.5
		20 + 20 + 35 + 35 + 35 + 50	1.38	1.38	2.42	2.42	2.42	3.46	4.5	13.5	14.0	1150	3220	3420	14.7	14.0	13.4
		20 + 25 + 25 + 25 + 25 + 25	1.86	2.33	2.33	2.33	2.33	2.33	4.5	13.5	14.0	1150	3250	3420	14.8	14.1	13.6
		20 + 25 + 25 + 25 + 25 + 35	1.74	2.18	2.18	2.18	2.18	3.05	4.5	13.5	14.0	1150	3240	3420	14.7	14.1	13.5
		20 + 25 + 25 + 25 + 25 + 50	1.59	1.99	1.99	1.99	1.99	3.97	4.5	13.5	14.0	1150	3240	3420	14.7	14.1	13.5
		20 + 25 + 25 + 25 + 25 + 60	1.50	1.88	1.88	1.88	1.88	4.50	4.5	13.5	14.0	1150	3230	3420	14.7	14.1	13.5
		20 + 25 + 25 + 25 + 35 + 35	1.64	2.05	2.05	2.05	2.86	2.86	4.5	13.5	14.0	1150	3240	3420	14.7	14.1	13.5
		20 + 25 + 25 + 25 + 35 + 50	1.50	1.88	1.88	1.88	2.63	3.75	4.5	13.5	14.0	1150	3230	3420	14.7	14.1	13.5
		20 + 25 + 25 + 25 + 35 + 60	1.42	1.78	1.78	1.78	2.49	4.26	4.5	13.5	14.0	1150	3230	3420	14.7	14.1	13.5
		20 + 25 + 25 + 25 + 50 + 50	1.38	1.73	1.73	1.73	3.46	3.46	4.5	13.5	14.0	1150	3220	3420	14.7	14.0	13.4
		20 + 25 + 25 + 35 + 35 + 35	1.54	1.93	1.93	2.70	2.70	2.70	4.5	13.5	14.0	1150	3230	3420	14.7	14.1	13.5
		20 + 25 + 25 + 35 + 35 + 50	1.42	1.78	1.78	2.49	2.49	3.55	4.5	13.5	14.0	1150	3230	3420	14.7	14.1	13.5
		20 + 25 + 35 + 35 + 35 + 35	1.46	1.82	2.55	2.55	2.55	2.55	4.5	13.5	14.0	1150	3230	3420	14.7	14.1	13.5
		20 + 25 + 35 + 35 + 35 + 35	1.38	2.42	2.42	2.42	2.42	2.42	4.5	13.5	14.0	1150	3220	3420	14.7	14.0	13.4
		25 + 25 + 25 + 25 + 25 + 25	2.25	2.25	2.25	2.25	2.25	2.25	4.5	13.5	14.0	1150	3240	3420	14.7	14.1	13.5
		25 + 25 + 25 + 25 + 25 + 35	2.11	2.11	2.11	2.11	2.11	2.95	4.5	13.5	14.0	1150	3240	3420	14.7	14.1	13.5
		25 + 25 + 25 + 25 + 25 + 50	1.93	1.93	1.93	1.93	1.93	3.86	4.5	13.5	14.0	1150	3230	3420	14.7	14.1	13.5
		25 + 25 + 25 + 25 + 25 + 60	1.82	1.82	1.82	1.82	1.82	4.38	4.5	13.5	14.0	1150	3230	3420	14.7	14.1	13.5
		25 + 25 + 25 + 25 + 35 + 35	1.99	1.99	1.99	1.99	2.78	2.78	4.5	13.5	14.0	1150	3240	3420	14.7	14.1	13.5
		25 + 25 + 25 + 25 + 35 + 50	1.82	1.82	1.82	1.82	2.55	3.65	4.5	13.5	14.0	1150	3230	3420	14.7	14.1	13.5
		25 + 25 + 25 + 25 + 35 + 60	1.73	1.73	1.73	1.73	2.42	4.15	4.5	13.5	14.0	1150	3220	3420	14.7	14.0	13.4
		25 + 25 + 25 + 35 + 35 + 35	1.88	1.88	1.88	2.63	2.63	2.63	4.5	13.5	14.0	1150	3230	3420	14.7	14.1	13.5
		25 + 25 + 25 + 35 + 35 + 50	1.73	1.73	1.73	2.42	2.42	3.46	4.5	13.5	14.0	1150	3220	3420	14.7	14.0	13.4
		25 + 25 + 35 + 35 + 35 + 35	1.78	1.78	2.49	2.49	2.49	2.49	4.5	13.5	14.0	1150	3230	3420	14.7	14.1	13.5

Cooling operation

Indoor unit combination			Cooling capacity (kW)									Power consumption (W)			Standard current (A)		
			Room cooling capacity (kW)						Total capacity (kW)			Min.	Standard	Max.	220V	230V	240V
			A room	B room	C room	D room	E room	F room	Min.	Standard	Max.						
Cooling operation	1 room	20	2.0	—	—	—	—	—	1.8	2.0	2.8	650	750	1100	3.4	3.3	3.2
		25	2.5	—	—	—	—	—	1.8	2.5	3.4	650	950	1350	4.4	4.2	4.0
		35	3.5	—	—	—	—	—	1.8	3.5	3.9	650	1400	1600	6.4	6.1	5.9
		50	5.0	—	—	—	—	—	1.8	5.0	6.1	650	2000	2500	9.2	8.8	8.4
		60	6.0	—	—	—	—	—	1.8	6.0	7.0	650	2450	3000	11.2	10.8	10.3
	2 room	20 + 20	2.00	2.00	—	—	—	—	3.0	4.0	5.6	740	910	1460	4.2	4.0	3.8
		20 + 25	2.00	2.50	—	—	—	—	3.0	4.5	6.2	740	1050	1820	4.8	4.6	4.4
		20 + 35	2.00	3.50	—	—	—	—	3.0	5.5	6.7	740	1430	2020	6.6	6.3	6.0
		20 + 50	2.00	5.00	—	—	—	—	3.0	7.0	8.9	740	2180	2820	10.0	9.6	9.2
		20 + 60	2.00	6.00	—	—	—	—	3.0	8.0	9.8	740	2530	3360	11.6	11.1	10.6
		25 + 25	2.50	2.50	—	—	—	—	3.0	5.0	6.8	740	1350	2200	6.2	5.9	5.7
		25 + 35	2.50	3.50	—	—	—	—	3.0	6.0	7.3	740	1720	2320	7.9	7.6	7.2
		25 + 50	2.50	5.00	—	—	—	—	3.0	7.5	9.5	740	2350	3220	10.8	10.3	9.9
		25 + 60	2.50	6.00	—	—	—	—	3.0	8.5	9.8	740	2680	3360	12.3	11.8	11.3
		35 + 35	3.50	3.50	—	—	—	—	3.0	7.0	7.8	740	2180	2820	10.0	9.6	9.2
		35 + 50	3.50	5.00	—	—	—	—	3.0	8.5	10.0	740	2680	3620	12.3	11.8	11.3
		35 + 60	3.50	6.00	—	—	—	—	3.0	9.5	10.9	740	3120	3990	14.3	13.7	13.1
		50 + 50	5.00	5.00	—	—	—	—	3.0	10.0	12.2	740	3350	4450	15.4	14.7	14.1
		50 + 60	5.00	6.00	—	—	—	—	3.0	11.0	12.5	740	3685	4520	16.9	16.2	15.5
		60 + 60	6.00	6.00	—	—	—	—	3.0	12.0	12.5	740	4200	4520	19.3	18.4	17.7
	3 room	20 + 20 + 20	2.00	2.00	2.00	—	—	—	3.7	6.0	8.4	880	1460	2560	6.7	6.4	6.1
		20 + 20 + 25	2.00	2.00	2.50	—	—	—	3.7	6.5	9.0	880	1650	2700	7.6	7.2	6.9
		20 + 20 + 35	2.00	2.00	3.50	—	—	—	3.7	7.5	9.5	880	1980	3120	9.1	8.7	8.3

Indoor unit combination			Cooling capacity (kW)									Power consumption (W)			Standard current (A)		
			Room cooling capacity (kW)						Total capacity (kW)								
			A room	B room	C room	D room	E room	F room	Min.	Standard	Max.	Min.	Standard	Max.	220V	230V	240V
Cooling operation	3 room	20 + 20 + 50	2.00	2.00	5.00	—	—	—	3.7	9.0	11.7	880	2600	4120	11.9	11.4	10.9
		20 + 20 + 60	2.00	2.00	6.00	—	—	—	3.7	10.0	12.6	880	3120	4680	14.3	13.7	13.1
		20 + 25 + 25	2.00	2.50	2.50	—	—	—	3.7	7.0	9.6	880	1850	3210	8.5	8.1	7.8
		20 + 25 + 35	2.00	2.50	3.50	—	—	—	3.7	8.0	10.1	880	2320	3630	10.7	10.2	9.8
		20 + 25 + 50	2.00	2.50	5.00	—	—	—	3.7	9.5	12.3	880	2980	4510	13.7	13.1	12.5
		20 + 25 + 60	2.00	2.50	6.00	—	—	—	3.7	10.5	12.8	880	3590	4800	16.5	15.8	15.1
		20 + 35 + 35	2.00	3.50	3.50	—	—	—	3.7	9.0	10.6	880	2780	4120	12.8	12.2	11.7
		20 + 35 + 50	2.00	3.50	5.00	—	—	—	3.7	10.5	12.8	880	3590	4800	16.5	15.8	15.1
		20 + 35 + 60	2.00	3.50	6.00	—	—	—	3.7	11.5	12.8	880	3950	4800	18.1	17.3	16.6
		20 + 50 + 50	2.00	5.00	5.00	—	—	—	3.7	12.0	12.8	880	4230	4800	19.4	18.6	17.8
		20 + 50 + 60	1.92	4.81	5.77	—	—	—	3.7	12.5	12.8	880	4450	4800	20.4	19.5	18.7
		20 + 60 + 60	1.79	5.36	5.36	—	—	—	3.7	12.5	12.8	880	4450	4800	20.4	19.5	18.7
		25 + 25 + 25	2.50	2.50	2.50	—	—	—	3.7	7.5	10.2	880	2030	3640	9.3	8.9	8.5
		25 + 25 + 35	2.50	2.50	3.50	—	—	—	3.7	8.5	10.7	880	2520	3900	11.6	11.1	10.6
		25 + 25 + 50	2.50	2.50	5.00	—	—	—	3.7	10.0	12.8	880	3260	4800	15.0	14.3	13.7
		25 + 25 + 60	2.50	2.50	6.00	—	—	—	3.7	11.0	12.8	880	3720	4800	17.1	16.3	15.7
		25 + 35 + 35	2.50	3.50	3.50	—	—	—	3.7	9.5	11.2	880	2980	4510	13.7	13.1	12.5
		25 + 35 + 50	2.50	3.50	5.00	—	—	—	3.7	11.0	12.8	880	3720	4800	17.1	16.3	15.7
		25 + 35 + 60	2.50	3.50	6.00	—	—	—	3.7	12.0	12.8	880	4230	4800	19.4	18.6	17.8
		25 + 50 + 50	2.50	5.00	5.00	—	—	—	3.7	12.5	12.8	880	4450	4800	20.4	19.5	18.7
		25 + 50 + 60	2.31	4.63	5.56	—	—	—	3.7	12.5	12.8	880	4450	4800	20.4	19.5	18.7
		25 + 60 + 60	2.16	5.17	5.17	—	—	—	3.7	12.5	12.8	880	4450	4800	20.4	19.5	18.7
		35 + 35 + 35	3.50	3.50	3.50	—	—	—	3.7	10.5	11.7	880	3590	4180	16.5	15.8	15.1
		35 + 35 + 50	3.50	3.50	5.00	—	—	—	3.7	12.0	12.8	880	4230	4800	19.4	18.6	17.8
		35 + 35 + 60	3.37	3.37	5.77	—	—	—	3.7	12.5	12.8	880	4450	4800	20.4	19.5	18.7
		35 + 50 + 50	3.24	4.63	4.63	—	—	—	3.7	12.5	12.8	880	4450	4800	20.4	19.5	18.7
		35 + 50 + 60	3.02	4.31	5.17	—	—	—	3.7	12.5	12.8	880	4450	4800	20.2	19.3	18.5
		35 + 60 + 60	2.82	4.84	4.84	—	—	—	3.7	12.5	12.8	880	4450	4800	20.2	19.3	18.5
		50 + 50 + 50	4.17	4.17	4.17	—	—	—	3.7	12.5	12.8	880	4440	4800	20.4	19.5	18.7
		50 + 50 + 60	3.91	3.91	4.69	—	—	—	3.7	12.5	12.8	880	4440	4800	20.4	19.5	18.7
		50 + 60 + 60	3.68	4.41	4.41	—	—	—	3.7	12.5	12.8	880	4430	4800	20.3	19.5	18.6
		60 + 60 + 60	4.17	4.17	4.17	—	—	—	3.7	12.5	12.8	880	4430	4800	20.3	19.5	18.6
	4 room	20 + 20 + 20 + 20	2.00	2.00	2.00	2.00	—	—	4.4	8.0	11.2	1100	2050	3680	9.3	8.9	8.6
		20 + 20 + 20 + 25	2.00	2.00	2.00	2.50	—	—	4.4	8.5	11.8	1100	2320	3890	10.6	10.1	9.7
		20 + 20 + 20 + 35	2.00	2.00	2.00	3.50	—	—	4.4	9.5	12.3	1100	2820	4530	12.8	12.3	11.8
		20 + 20 + 20 + 50	2.00	2.00	2.00	5.00	—	—	4.4	11.0	13.0	1100	3480	4800	15.8	15.1	14.5
		20 + 20 + 20 + 60	2.00	2.00	2.00	6.00	—	—	4.4	12.0	13.0	1100	3980	4800	18.1	17.3	16.6
		20 + 20 + 25 + 25	2.00	2.00	2.50	2.50	—	—	4.4	9.0	12.4	1100	2520	4590	11.5	11.0	10.5
		20 + 20 + 25 + 35	2.00	2.00	2.50	3.50	—	—	4.4	10.0	12.9	1100	3120	4780	14.2	13.6	13.0
		20 + 20 + 25 + 50	2.00	2.00	2.50	5.00	—	—	4.4	11.5	13.0	1100	3720	4800	16.9	16.2	15.5
		20 + 20 + 25 + 60	2.00	2.00	2.50	6.00	—	—	4.4	12.5	13.0	1100	4600	4800	20.9	20.0	19.2
		20 + 20 + 35 + 35	2.00	2.00	3.50	3.50	—	—	4.4	11.0	13.0	1100	3480	4800	15.8	15.1	14.5
		20 + 20 + 35 + 50	2.00	2.00	3.50	5.00	—	—	4.4	12.5	13.0	1100	4600	4800	20.9	20.0	19.2
		20 + 20 + 35 + 60	1.85	1.85	3.24	5.56	—	—	4.4	12.5	13.0	1100	4590	4800	20.9	20.0	19.1
		20 + 20 + 50 + 50	1.79	1.79	4.46	4.46	—	—	4.4	12.5	13.0	1100	4590	4800	20.9	20.0	19.1
		20 + 20 + 50 + 60	1.67	1.67	4.17	5.00	—	—	4.4	12.5	13.0	1100	4590	4800	20.9	20.0	19.1
		20 + 20 + 60 + 60	1.56	1.56	4.69	4.69	—	—	4.4	12.5	13.0	1100	4580	4800	20.8	19.9	19.1
		20 + 25 + 25 + 25	2.00	2.50	2.50	2.50	—	—	4.4	9.5	13.0	1100	2820	4800	12.8	12.3	11.8
		20 + 25 + 25 + 35	2.00	2.50	2.50	3.50	—	—	4.4	10.5	13.0	1100	3340	4800	15.2	14.5	13.9
		20 + 25 + 25 + 50	2.00	2.50	2.50	5.00	—	—	4.4	12.0	13.0	1100	3980	4800	18.1	17.3	16.6
		20 + 25 + 25 + 60	1.92	2.40	2.40	5.77	—	—	4.4	12.5	13.0	1100	4600	4800	20.9	20.0	19.2
		20 + 25 + 35 + 35	2.00	2.50	3.50	3.50	—	—	4.4	11.5	13.0	1100	3720	4800	16.9	16.2	15.5
		20 + 25 + 35 + 50	1.92	2.40	3.37	4.81	—	—	4.4	12.5	13.0	1100	4600	4800	20.9	20.0	19.2
		20 + 25 + 35 + 60	1.79	2.23	3.13	5.36	—	—	4.4	12.5	13.0	1100	4590	4800	20.9	20.0	19.1
		20 + 25 + 50 + 50	1.72	2.16	4.31	4.31	—	—	4.4	12.5	13.0	1100	4590	4800	20.9	20.0	19.1
		20 + 25 + 50 + 60	1.61	2.02	4.03	4.84	—	—	4.4	12.5	13.0	1100	4580	4800	20.8	19.9	19.1
		20 + 25 + 60 + 60	1.52	1.89	4.55	4.55	—	—	4.4	12.5	13.0	1100	4580	4800	20.8	19.9	19.1
		20 + 35 + 35 + 35	2.00	3.50	3.50	3.50	—	—	4.4	12.5	13.0	1100	4600	4800	20.9	20.0	19.2
		20 + 35 + 35 + 50	1.79	3.13	3.13	4.46	—	—	4.4	12.5	13.0	1100	4590	4800	20.9	20.0	19.1
		20 + 35 + 35 + 60	1.67	2.92	2.92	5.00	—	—	4.4	12.5	13.0	1100	4590	4800	20.9	20.0	19.1
		20 + 35 + 50 + 50	1.61	2.82	4.03	4.03	—	—	4.4	12.5	13.0	1100	4580	4800	20.8	19.9	19.1
		20 + 35 + 50 + 60	1.52	2.65	3.79	4.55	—	—	4.4	12.5	13.0	1100	4580	4800	20.8	19.9	19.1
		20 + 35 + 60 + 60	1.43	2.50	4.29	4.29	—	—	5.4	12.5	13.0	1100	4570	4801	20.6	19.7	18.9
		20 + 50 + 50 + 50	1.47	3.68	3.68	3.68	—	—	4.4	12.5	13.0	1100	4580	4800	20.8	19.9	19.1
		20 + 50 + 50 + 60	1.39	3.47	3.47	4.17	—	—	4.4	12.5	13.0	1100	4570	4800	20.8	19.9	19.1
		20 + 50 + 60 + 60	1.32	3.29	3.95	3.95	—	—	4.4	12.5	13.0	1100	4560	4800	20.7	19.8	19.0
		25 + 25 + 25 + 25	2.50	2.50	2.50	2.50	—	—	4.4	10.0	13.0	1100	3120	4800	14.2	13.6	13.0
		25 + 25 + 25 + 35	2.50	2.50	2.50	3.50	—	—	4.4	11.0	13.0	1100	3480	4800	15.8	15.1	14.5
		25 + 25 + 25 + 50	2.50	2.50	2.50	5.00	—	—	4.4	12.5	13.0	1100	4600	4800	20.9	20.0	19.2
		25 + 25 + 25 + 60	2.31	2.31	2.31	5.56	—	—	4.4	12.5	13.0	1100	4590	4800	20.9	20.0	19.1
		25 + 25 + 35 + 35	2.50	2.50	3.50	3.50	—	—	4.4	12.0	13.0	1100	3980	4800	18.1	17.3	16.6
		25 + 25 + 35 + 50	2.31	2.31	3.24	4.63	—	—	4.4	12.5	13.0	1100	4590	4800	20.9	20.0	19.1
		25 + 25 + 35 + 60	2.16	2.16	3.02	5.17	—	—	4.4	12.5	13.0	1100	4590	4800	20.9	20.0	19.1
		25 + 25 + 50 + 50	2.08	2.08	4.17	4.17	—	—	4.4	12.5	13.0	1100	4590	4800	20.9	20.0	19.1
		25 + 25 + 50 + 60	1.95	1.95	3.91	4.69	—	—	4.4	12.5	13.0	1100	4580	4800	20.8	19.9	19.1
		25 + 25 + 60 + 60	1.84	1.84	4.41	4.41	—	—	4.4	12.5	13.0	1100	4580	4800	20.8	19.9	19.1
		25 + 35 + 35 + 35	2.40	3.37	3.37	3.37	—	—	4.4	12.5	13.0	1100	4600	4800	20.9	20.0	19.2
		25 + 35 + 35 + 50	2.16	3.02	3.02	4.31	—	—	4.4	12.5	13.0	1100	4590	4800	20.9	20.0	19.1
		25 + 35 + 35 + 60	2.02	2.82	2.82	4.84	—	—	4.4	12.5	13.0	1100	4580	4800	20.8	19.9	19.1
		25 + 35 + 50 + 50	1.95	2.73	3.91	3.91	—	—	4.4	12.5	13.0	1100	4580	4800	20.8	19.9	19.1
		25 + 35 + 50 + 60	1.84	2.57	3.68	4.41	—	—	4.4	12.5	13.0	1100	4580	4800	20.8	19.9	19.1
		25 + 35 + 60 + 60	1.74	2.43	4.17	4.17	—	—	4.4	12.5	13.0	1100	4570	4800	20.8	19.9	19.1
		25 + 50 + 50 + 50	1.79	3.57	3.57	3.57	—	—	4.4	12.5	13.0	1100	4570	4800	20.8	19.9	19.1
		25 + 50 + 50 + 60	1.69	3.38	3.38	4.05	—	—	4.4	12.5	13.0	1100	4570	4800	20.8	19.9	19.1
		25 + 50 + 60 + 60	1.60	3.21	3.85	3.85	—	—	4.4	12.5	13.0	1100	4560	4800	20.7	19.8	19.0
		35 + 35 + 35 + 35	3.13	3.13	3.13	3.13	—	—	4.4	12.5	13.0	1100	4590	4800	20.9	20.0	19.1
		35 + 35 + 35 + 50	2.82	2.82	2.82	4.03	—	—	4.4	12.5	13.0	1100	4580	4800	20.8	19.9	19.1
		35 + 35 + 35 + 60	2.65	2.65	2.65	4.55	—	—	4.4	12.5	13.0	1100	4580	4800	20.8	19.9	19.1
		35 + 35 + 50 + 50	2.57	2.57	3.68	3.68	—	—	4.4	12.5	13.0	1100	4580	4800	20.8	19.9	19.1
		35 + 35 + 50 + 60	2.43	2.43	3.47	4.17	—	—	4.4	12.5	13.0	1100	4570	4800	20.8	19.9	19.1
		35 + 35 + 60 + 60	2.30	2.30	3.95	3.95	—	—	4.4	12.5	13.0	1100	4560	4800	20.7	19.8	19.0
		35 + 50 + 50 + 50	2.36	3.38	3.38	3.38	—	—	4.4	12.5	13.0	1100	4570	4800	20.8	19.9	19.1
		35 + 50 + 50 + 60	2.24	3.21	3.21	3.85	—	—	4.4	12.5	13.0	1100	4560	4800	20.7	19.8	19.0

Indoor unit combination			Cooling capacity (kW)									Power consumption (W)			Standard current (A)		
			Room cooling capacity (kW)						Total capacity (kW)								
			A room	B room	C room	D room	E room	F room	Min.	Standard	Max.	Min.	Standard	Max.	220V	230V	240V
Cooling operation	5 room	20 + 20 + 20 + 20 + 20	2.00	2.00	2.00	2.00	2.00	—	5.1	10.0	13.5	1210	2880	4800	13.1	12.5	12.0
		20 + 20 + 20 + 20 + 25	2.00	2.00	2.00	2.00	2.50	—	5.1	10.5	13.5	1210	3120	4800	14.2	13.6	13.0
		20 + 20 + 20 + 20 + 35	2.00	2.00	2.00	2.00	3.50	—	5.1	11.5	13.5	1210	3620	4800	16.5	15.8	15.1
		20 + 20 + 20 + 20 + 50	1.92	1.92	1.92	1.92	4.81	—	5.1	12.5	13.5	1210	4320	4800	19.7	18.8	18.0
		20 + 20 + 20 + 20 + 60	1.79	1.79	1.79	1.79	5.36	—	5.1	12.5	13.5	1210	4310	4800	19.6	18.8	18.0
		20 + 20 + 20 + 25 + 25	2.00	2.00	2.00	2.50	2.50	—	5.1	11.0	13.5	1210	3320	4800	15.1	14.4	13.8
		20 + 20 + 20 + 25 + 35	2.00	2.00	2.00	2.50	3.50	—	5.1	12.0	13.5	1210	3990	4800	18.2	17.4	16.6
		20 + 20 + 20 + 25 + 50	1.85	1.85	1.85	2.31	4.63	—	5.1	12.5	13.5	1210	4320	4800	19.7	18.8	18.0
		20 + 20 + 20 + 25 + 60	1.72	1.72	1.72	2.16	5.17	—	5.1	12.5	13.5	1210	4310	4800	19.6	18.8	18.0
		20 + 20 + 20 + 35 + 35	1.92	1.92	1.92	3.37	3.37	—	5.1	12.5	13.5	1210	4320	4800	19.7	18.8	18.0
		20 + 20 + 20 + 35 + 50	1.72	1.72	1.72	3.02	4.31	—	5.1	12.5	13.5	1210	4310	4800	19.6	18.8	18.0
		20 + 20 + 20 + 35 + 60	1.61	1.61	1.61	2.82	4.84	—	5.1	12.5	13.5	1210	4300	4800	19.6	18.7	17.9
		20 + 20 + 20 + 50 + 50	1.56	1.56	1.56	3.91	3.91	—	5.1	12.5	13.5	1210	4300	4800	19.6	18.7	17.9
		20 + 20 + 20 + 50 + 60	1.47	1.47	1.47	3.68	4.41	—	5.1	12.5	13.5	1210	4290	4800	19.5	18.7	17.9
		20 + 20 + 20 + 60 + 60	1.39	1.39	1.39	4.17	4.17	—	5.1	12.5	13.5	1210	4280	4800	19.5	18.6	17.9
		20 + 20 + 25 + 25 + 25	2.00	2.00	2.50	2.50	2.50	—	5.1	11.5	13.5	1210	3620	4800	16.5	15.8	15.1
		20 + 20 + 25 + 25 + 35	2.00	2.00	2.50	2.50	3.50	—	5.1	12.5	13.5	1210	4330	4800	19.7	18.8	18.1
		20 + 20 + 25 + 25 + 50	1.79	1.79	2.23	2.23	4.46	—	5.1	12.5	13.5	1210	4310	4800	19.6	18.8	18.0
		20 + 20 + 25 + 25 + 60	1.67	1.67	2.08	2.08	5.00	—	5.1	12.5	13.5	1210	4300	4800	19.6	18.7	17.9
		20 + 20 + 25 + 35 + 35	1.85	1.85	2.31	3.24	3.24	—	5.1	12.5	13.5	1210	4320	4800	19.7	18.8	18.0
		20 + 20 + 25 + 35 + 50	1.67	1.67	2.08	2.92	4.17	—	5.1	12.5	13.5	1210	4300	4800	19.6	18.7	17.9
		20 + 20 + 25 + 35 + 60	1.56	1.56	1.95	2.73	4.69	—	5.1	12.5	13.5	1210	4300	4800	19.6	18.7	17.9
		20 + 20 + 25 + 50 + 50	1.52	1.52	1.89	3.79	3.79	—	5.1	12.5	13.5	1210	4290	4800	19.5	18.7	17.9
		20 + 20 + 25 + 50 + 60	1.43	1.43	1.79	3.57	4.29	—	5.1	12.5	13.5	1210	4280	4800	19.5	18.6	17.9
		20 + 20 + 25 + 60 + 60	1.35	1.35	1.69	4.05	4.05	—	5.1	12.5	13.5	1210	4280	4800	19.5	18.6	17.9
		20 + 20 + 35 + 35 + 35	1.72	1.72	3.02	3.02	3.02	—	5.1	12.5	13.5	1210	4310	4800	19.6	18.8	18.0
		20 + 20 + 35 + 35 + 50	1.56	1.56	2.73	2.73	3.91	—	5.1	12.5	13.5	1210	4300	4800	19.6	18.7	17.9
		20 + 20 + 35 + 35 + 60	1.47	1.47	2.57	2.57	4.41	—	5.1	12.5	13.5	1210	4290	4800	19.5	18.7	17.9
		20 + 20 + 35 + 50 + 50	1.43	1.43	2.50	3.57	3.57	—	5.1	12.5	13.5	1210	4280	4800	19.5	18.6	17.9
		20 + 20 + 35 + 50 + 60	1.35	1.35	2.36	3.38	4.05	—	5.1	12.5	13.5	1210	4280	4800	19.5	18.6	17.9
		20 + 20 + 35 + 60 + 60	1.28	1.28	2.24	3.85	3.85	—	5.1	12.5	13.5	1210	4270	4800	19.4	18.6	17.8
		20 + 20 + 50 + 50 + 50	1.32	1.32	3.29	3.29	3.29	—	5.1	12.5	13.5	1210	4270	4800	19.4	18.6	17.8
		20 + 25 + 25 + 25 + 25	2.00	2.50	2.50	2.50	2.50	—	5.1	12.0	13.5	1210	3990	4800	18.2	17.4	16.6
		20 + 25 + 25 + 25 + 35	1.92	2.40	2.40	2.40	3.37	—	5.1	12.5	13.5	1210	4320	4800	19.7	18.8	18.0
		20 + 25 + 25 + 25 + 50	1.72	2.16	2.16	2.16	4.31	—	5.1	12.5	13.5	1210	4310	4800	19.6	18.8	18.0
		20 + 25 + 25 + 25 + 60	1.61	2.02	2.02	2.02	4.84	—	5.1	12.5	13.5	1210	4300	4800	19.6	18.7	17.9
		20 + 25 + 25 + 35 + 35	1.79	2.23	2.23	3.13	3.13	—	5.1	12.5	13.5	1210	4310	4800	19.6	18.8	18.0
		20 + 25 + 25 + 35 + 50	1.61	2.02	2.02	2.82	4.03	—	5.1	12.5	13.5	1210	4300	4800	19.6	18.7	17.9
		20 + 25 + 25 + 35 + 60	1.52	1.89	1.89	2.65	4.55	—	5.1	12.5	13.5	1210	4290	4800	19.5	18.7	17.9
		20 + 25 + 25 + 50 + 50	1.47	1.84	1.84	3.68	3.68	—	5.1	12.5	13.5	1210	4290	4800	19.5	18.7	17.9
		20 + 25 + 25 + 50 + 60	1.39	1.74	1.74	3.47	4.17	—	5.1	12.5	13.5	1210	4280	4800	19.5	18.6	17.9
		20 + 25 + 25 + 60 + 60	1.32	1.64	1.64	3.95	3.95	—	5.1	12.5	13.5	1210	4270	4800	19.4	18.6	17.8
		20 + 25 + 35 + 35 + 35	1.67	2.08	2.92	2.92	2.92	—	5.1	12.5	13.5	1210	4300	4800	19.6	18.7	17.9
		20 + 25 + 35 + 35 + 50	1.52	1.89	2.65	2.65	3.79	—	5.1	12.5	13.5	1210	4290	4800	19.5	18.7	17.9
		20 + 25 + 35 + 35 + 60	1.43	1.79	2.50	2.50	4.29	—	5.1	12.5	13.5	1210	4280	4800	19.5	18.6	17.9
		20 + 25 + 35 + 50 + 50	1.39	1.74	2.43	3.47	3.47	—	5.1	12.5	13.5	1210	4280	4800	19.5	18.6	17.9
		20 + 25 + 35 + 50 + 60	1.32	1.64	2.30	3.29	3.95	—	5.1	12.5	13.5	1210	4270	4800	19.4	18.6	17.8
		20 + 25 + 50 + 50 + 50	1.28	1.60	3.21	3.21	3.21	—	5.1	12.5	13.5	1210	4270	4800	19.4	18.6	17.8
		20 + 35 + 35 + 35 + 35	1.56	2.73	2.73	2.73	2.73	—	5.1	12.5	13.5	1210	4300	4800	19.6	18.7	17.9
		20 + 35 + 35 + 35 + 50	1.43	2.50	2.50	2.50	3.57	—	5.1	12.5	13.5	1210	4280	4800	19.5	18.6	17.9
		20 + 35 + 35 + 35 + 60	1.35	2.36	2.36	2.36	4.05	—	5.1	12.5	13.5	1210	4280	4800	19.5	18.6	17.9
		20 + 35 + 35 + 50 + 50	1.32	2.30	2.30	3.29	3.29	—	5.1	12.5	13.5	1210	4270	4800	19.4	18.6	17.8
		25 + 25 + 25 + 25 + 25	2.50	2.50	2.50	2.50	2.50	—	5.1	12.5	13.5	1210	4330	4800	19.7	18.8	18.1
		25 + 25 + 25 + 25 + 35	2.31	2.31	2.31	2.31	3.24	—	5.1	12.5	13.5	1210	4320	4800	19.7	18.8	18.0
		25 + 25 + 25 + 25 + 50	2.08	2.08	2.08	2.08	4.17	—	5.1	12.5	13.5	1210	4300	4800	19.6	18.7	17.9
		25 + 25 + 25 + 25 + 60	1.95	1.95	1.95	1.95	4.69	—	5.1	12.5	13.5	1210	4300	4800	19.6	18.7	17.9
		25 + 25 + 25 + 35 + 35	2.16	2.16	2.16	3.02	3.02	—	5.1	12.5	13.5	1210	4310	4800	19.6	18.8	18.0
		25 + 25 + 25 + 35 + 50	1.95	1.95	1.95	2.73	3.91	—	5.1	12.5	13.5	1210	4300	4800	19.6	18.7	17.9
		25 + 25 + 25 + 35 + 60	1.84	1.84	1.84	2.57	4.41	—	5.1	12.5	13.5	1210	4290	4800	19.5	18.7	17.9
		25 + 25 + 25 + 50 + 50	1.79	1.79	1.79	3.57	3.57	—	5.1	12.5	13.5	1210	4280	4800	19.5	18.6	17.9
		25 + 25 + 25 + 50 + 60	1.69	1.69	1.69	3.38	4.05	—	5.1	12.5	13.5	1210	4280	4800	19.5	18.6	17.9
		25 + 25 + 25 + 60 + 60	1.60	1.60	1.60	3.85	3.85	—	5.1	12.5	13.5	1210	4270	4800	19.4	18.6	17.8
		25 + 25 + 35 + 35 + 35	2.02	2.02	2.82	2.82	2.82	—	5.1	12.5	13.5	1210	4300	4800	19.6	18.7	17.9
		25 + 25 + 35 + 35 + 50	1.84	1.84	2.57	2.57	3.68	—	5.1	12.5	13.5	1210	4290	4800	19.5	18.7	17.9
		25 + 25 + 35 + 35 + 60	1.74	1.74	2.43	2.43	4.17	—	5.1	12.5	13.5	1210	4280	4800	19.5	18.6	17.9
		25 + 25 + 35 + 50 + 50	1.69	1.69	2.36	3.38	3.38	—	5.1	12.5	13.5	1210	4280	4800	19.5	18.6	17.9
		25 + 25 + 35 + 50 + 60	1.60	1.60	2.24	3.21	3.85	—	5.1	12.5	13.5	1210	4270	4800	19.4	18.6	17.8
		25 + 35 + 35 + 35 + 35	1.89	2.65	2.65	2.65	2.65	—	5.1	12.5	13.5	1210	4290	4800	19.5	18.7	17.9
		25 + 35 + 35 + 35 + 50	1.74	2.43	2.43	2.43	3.47	—	5.1	12.5	13.5	1210	4280	4800	19.5	18.6	17.9
		25 + 35 + 35 + 35 + 60	1.64	2.30	2.30	2.30	3.95	—	5.1	12.5	13.5	1210	4270	4800	19.4	18.6	17.8
		25 + 35 + 35 + 50 + 50	1.60	2.24	2.24	3.21	3.21	—	5.1	12.5	13.5	1210	4270	4800	19.4	18.6	17.8
		35 + 35 + 35 + 35 + 35	2.50	2.50	2.50	2.50	2.50	—	5.1	12.5	13.5	1210	4280	4800	19.5	18.6	17.9
		35 + 35 + 35 + 35 + 50	2.30	2.30	2.30	2.30	3.29	—	5.1	12.5	13.5	1210	4270	4800	19.4	18.6	17.8
	6 room	20 + 20 + 20 + 20 + 20 + 20	2.00	2.00	2.00	2.00	2.00	2.00	5.5	12.0	13.8	1280	3660	4620	16.7	15.9	15.3
		20 + 20 + 20 + 20 + 20 + 25	2.00	2.00	2.00	2.00	2.00	2.50	5.5	12.5	14.0	1280	3900	4800	17.7	17.0	16.3
		20 + 20 + 20 + 20 + 20 + 35	1.85	1.85	1.85	1.85	1.85	3.24	5.5	12.5	14.0	1280	3890	4800	17.7	16.9	16.2
		20 + 20 + 20 + 20 + 20 + 50	1.67	1.67	1.67	1.67	1.67	4.17	5.5	12.5	14.0	1280	3860	4800	17.6	16.8	16.1
		20 + 20 + 20 + 20 + 20 + 60	1.56	1.56	1.56	1.56	1.56	4.69	5.5	12.5	14.0	1280	3860	4800	17.6	16.8	16.1
		20 + 20 + 20 + 20 + 25 + 25	1.92	1.92	1.92	1.92	2.40	2.40	5.5	12.5	14.0	1280	3900	4800	17.7	17.0	16.3
		20 + 20 + 20 + 20 + 25 + 35	1.79	1.79	1.79	1.79	2.23	3.13	5.5	12.5	14.0	1280	3880	4800	17.7	16.9	16.2
		20 + 20 + 20 + 20 + 25 + 50	1.61	1.61	1.61	1.61	2.02	4.03	5.5	12.5	14.0	1280	3860	4800	17.6	16.8	16.1
		20 + 20 + 20 + 20 + 25 + 60	1.52	1.52	1.52	1.52	1.89	4.55	5.5	12.5	14.0	1280	3850	4800	17.5	16.8	16.1
		20 + 20 + 20 + 20 + 35 + 35	1.67	1.67	1.67	1.67	2.92	2.92	5.5	12.5	14.0	1280	3860	4800	17.6	16.8	16.1
		20 + 20 + 20 + 20 + 35 + 50	1.52	1.52	1.52	1.52	2.65	3.79	5.5	12.5	14.0	1280	3850	4800	17.5	16.8	16.1
		20 + 20 + 20 + 20 + 35 + 60	1.43	1.43	1.43	1.43	2.50	4.29	5.5	12.5	14.0	1280	3830	4800	17.4	16.7	16.0
		20 + 20 + 20 + 20 + 50 + 50	1.39	1.39	1.39	1.39	3.47	3.47	5.5	12.5	14.0	1280	3820	4800	17.4	16.6	15.9
		20 + 20 + 20 + 20 + 50 + 60	1.32	1.32	1.32	1.32	3.29	3.95	5.5	12.5	14.0	1280	3800	4800	17.3	16.5	15.8
		20 + 20 + 20 + 25 + 25 + 25	1.85	1.85	1.85	2.31	2.31	2.31	5.5	12.5	14.0	1280	3890	4800	17.7	16.9	16.2
		20 + 20 + 20 + 25 + 25 + 35	1.72	1.72	1.72	2.16	2.16	3.02	5.5	12.5	14.0	1280	3870	4800	17.6	16.8	16.1
		20 + 20 + 20 + 25 + 25 + 50	1.56	1.56	1.56	1.95	1.95	3.91	5.5	12.5	14.0	1280	3860	4800	17.6	16.8	16.1
		20 + 20 + 20 + 25 + 25 + 60	1.47	1.47	1.47	1.84	1.84	4.41	5.5	12.5	14.0	1280	3840	4800	17.5	16.7	16.0
		20 + 20 + 20 + 25 + 35 + 35	1.61	1.61	1.61	2.02	2.82	2.82	5.5	12.5	14.0	1280	3860	4800	17.6	16.8	16.1
		20 + 20 + 20 + 25 + 35 + 50	1.47	1.47	1.47	1.84	2.57	3.68	5.5	12.5	14.0	1280	3840	4800	17.5	16.7	16.0

		Indoor unit combination	Cooling capacity (kW)									Power consumption (W)			Standard current (A)		
			Room cooling capacity (kW)						Total capacity (kW)			Min.	Standard	Max.	220V	230V	240V
			A room	B room	C room	D room	E room	F room	Min.	Standard	Max.						
Cooling operation	6 room	20 + 20 + 20 + 25 + 35 + 60	1.39	1.39	1.39	1.74	2.43	4.17	5.5	12.5	14.0	1280	3820	4800	17.4	16.6	15.9
		20 + 20 + 20 + 25 + 50 + 50	1.35	1.35	1.35	1.69	3.38	3.38	5.5	12.5	14.0	1280	3810	4800	17.3	16.6	15.9
		20 + 20 + 20 + 25 + 50 + 60	1.28	1.28	1.28	1.60	3.21	3.85	5.5	12.5	14.0	1280	3800	4800	17.3	16.5	15.8
		20 + 20 + 20 + 35 + 35 + 35	1.52	1.52	1.52	2.65	2.65	2.65	5.5	12.5	14.0	1280	3850	4800	17.5	16.8	16.1
		20 + 20 + 20 + 35 + 35 + 50	1.39	1.39	1.39	2.43	2.43	3.47	5.5	12.5	14.0	1280	3820	4800	17.4	16.6	15.9
		20 + 20 + 20 + 35 + 35 + 60	1.32	1.32	1.32	2.30	2.30	3.95	5.5	12.5	14.0	1280	3800	4800	17.3	16.5	15.8
		20 + 20 + 20 + 35 + 50 + 50	1.28	1.28	1.28	2.24	3.21	3.21	5.5	12.5	14.0	1280	3800	4800	17.3	16.5	15.8
		20 + 20 + 25 + 25 + 25 + 25	1.79	1.79	2.23	2.23	2.23	2.23	5.5	12.5	14.0	1280	3880	4800	17.7	16.9	16.2
		20 + 20 + 25 + 25 + 25 + 35	1.67	1.67	2.08	2.08	2.08	2.92	5.5	12.5	14.0	1280	3860	4800	17.6	16.8	16.1
		20 + 20 + 25 + 25 + 25 + 50	1.52	1.52	1.89	1.89	1.89	3.79	5.5	12.5	14.0	1280	3850	4800	17.5	16.8	16.1
		20 + 20 + 25 + 25 + 25 + 60	1.43	1.43	1.79	1.79	1.79	4.29	5.5	12.5	14.0	1280	3830	4800	17.4	16.7	16.0
		20 + 20 + 25 + 25 + 35 + 35	1.56	1.56	1.95	1.95	2.73	2.73	5.5	12.5	14.0	1280	3860	4800	17.6	16.8	16.1
		20 + 20 + 25 + 25 + 35 + 50	1.43	1.43	1.79	1.79	2.50	3.57	5.5	12.5	14.0	1280	3830	4800	17.4	16.7	16.0
		20 + 20 + 25 + 25 + 35 + 60	1.35	1.35	1.69	1.69	2.36	4.05	5.5	12.5	14.0	1280	3810	4800	17.3	16.6	15.9
		20 + 20 + 25 + 25 + 50 + 50	1.32	1.32	1.64	1.64	3.29	3.29	5.5	12.5	14.0	1280	3800	4800	17.3	16.5	15.8
		20 + 20 + 25 + 35 + 35 + 35	1.47	1.47	1.84	2.57	2.57	2.57	5.5	12.5	14.0	1280	3840	4800	17.5	16.7	16.0
		20 + 20 + 25 + 35 + 35 + 50	1.35	1.35	1.69	2.36	2.36	3.38	5.5	12.5	14.0	1280	3810	4800	17.3	16.6	15.9
		20 + 20 + 25 + 35 + 35 + 60	1.28	1.28	1.60	2.24	2.24	3.85	5.5	12.5	14.0	1280	3800	4800	17.3	16.5	15.8
		20 + 20 + 35 + 35 + 35 + 35	1.39	1.39	2.43	2.43	2.43	2.43	5.5	12.5	14.0	1280	3820	4800	17.4	16.6	15.9
		20 + 20 + 35 + 35 + 35 + 50	1.28	1.28	2.24	2.24	2.24	3.21	5.5	12.5	14.0	1280	3800	4800	17.3	16.5	15.8
		20 + 25 + 25 + 25 + 25 + 25	1.72	2.16	2.16	2.16	2.16	2.16	5.5	12.5	14.0	1280	3870	4800	17.6	16.8	16.1
		20 + 25 + 25 + 25 + 25 + 35	1.61	2.02	2.02	2.02	2.02	2.82	5.5	12.5	14.0	1280	3860	4800	17.6	16.8	16.1
		20 + 25 + 25 + 25 + 25 + 50	1.47	1.84	1.84	1.84	1.84	3.68	5.5	12.5	14.0	1280	3840	4800	17.5	16.7	16.0
		20 + 25 + 25 + 25 + 25 + 60	1.39	1.74	1.74	1.74	1.74	4.17	5.5	12.5	14.0	1280	3820	4800	17.4	16.6	15.9
		20 + 25 + 25 + 25 + 35 + 35	1.52	1.89	1.89	1.89	2.65	2.65	5.5	12.5	14.0	1280	3850	4800	17.5	16.8	16.1
		20 + 25 + 25 + 25 + 35 + 50	1.39	1.74	1.74	1.74	2.43	3.47	5.5	12.5	14.0	1280	3820	4800	17.4	16.6	15.9
		20 + 25 + 25 + 25 + 35 + 60	1.32	1.64	1.64	1.64	2.30	3.95	5.5	12.5	14.0	1280	3800	4800	17.3	16.5	15.8
		20 + 25 + 25 + 25 + 50 + 50	1.28	1.60	1.60	1.60	3.21	3.21	5.5	12.5	14.0	1280	3800	4800	17.3	16.5	15.8
		20 + 25 + 25 + 35 + 35 + 35	1.43	1.79	1.79	2.50	2.50	2.50	5.5	12.5	14.0	1280	3830	4800	17.4	16.7	16.0
		20 + 25 + 25 + 35 + 35 + 50	1.32	1.64	1.64	2.30	2.30	3.29	5.5	12.5	14.0	1280	3800	4800	17.3	16.5	15.8
		20 + 25 + 35 + 35 + 35 + 35	1.35	1.69	2.36	2.36	2.36	2.36	5.5	12.5	14.0	1280	3810	4800	17.3	16.6	15.9
		20 + 35 + 35 + 35 + 35 + 35	1.28	2.24	2.24	2.24	2.24	2.24	5.5	12.5	14.0	1280	3800	4800	17.3	16.5	15.8
		25 + 25 + 25 + 25 + 25 + 25	2.08	2.08	2.08	2.08	2.08	2.08	5.5	12.5	14.0	1280	3860	4800	17.6	16.8	16.1
		25 + 25 + 25 + 25 + 25 + 35	1.95	1.95	1.95	1.95	1.95	2.73	5.5	12.5	14.0	1280	3860	4800	17.6	16.8	16.1
		25 + 25 + 25 + 25 + 25 + 50	1.79	1.79	1.79	1.79	1.79	3.57	5.5	12.5	14.0	1280	3830	4800	17.4	16.7	16.0
		25 + 25 + 25 + 25 + 25 + 60	1.69	1.69	1.69	1.69	1.69	4.05	5.5	12.5	14.0	1280	3810	4800	17.3	16.6	15.9
		25 + 25 + 25 + 25 + 35 + 35	1.84	1.84	1.84	1.84	2.57	2.57	5.5	12.5	14.0	1280	3840	4800	17.5	16.7	16.0
		25 + 25 + 25 + 25 + 35 + 50	1.69	1.69	1.69	1.69	2.36	3.38	5.5	12.5	14.0	1280	3810	4800	17.3	16.6	15.9
		25 + 25 + 25 + 25 + 35 + 60	1.60	1.60	1.60	1.60	2.24	3.85	5.5	12.5	14.0	1280	3800	4800	17.3	16.5	15.8
		25 + 25 + 25 + 35 + 35 + 35	1.74	1.74	1.74	2.43	2.43	2.43	5.5	12.5	14.0	1280	3820	4800	17.4	16.6	15.9
		25 + 25 + 25 + 35 + 35 + 50	1.60	1.60	1.60	2.24	2.24	3.21	5.5	12.5	14.0	1280	3800	4800	17.3	16.5	15.8
		25 + 25 + 35 + 35 + 35 + 35	1.64	1.64	2.30	2.30	2.30	2.30	5.5	12.5	14.0	1280	3800	4800	17.3	16.5	15.8

SCM125ZM-S Table of Indoor unit combination not with SRK-ZMX-S type only

		Indoor unit combination	Heating capacity (kW)									Power consumption (W)			Standard current (A)		
			Room heating capacity (kW)						Total capacity (kW)			Min.	Standard	Max.	220V	230V	240V
			A room	B room	C room	D room	E room	F room	Min.	Standard	Max.						
Heating operation	1 room	20	3.0	—	—	—	—	—	1.5	3.0	3.6	700	1220	1330	5.6	5.4	5.1
		25	3.4	—	—	—	—	—	1.5	3.4	4.1	700	1265	1540	5.8	5.6	5.3
		35	4.5	—	—	—	—	—	1.5	4.5	4.9	700	1650	1840	7.6	7.2	6.9
		50	5.8	—	—	—	—	—	1.5	5.8	6.4	700	2120	2410	9.7	9.3	8.9
		60	6.8	—	—	—	—	—	1.5	6.8	7.4	700	2500	2760	11.5	11.0	10.5
		71	8.0	—	—	—	—	—	1.5	8.0	8.1	700	3020	3090	13.9	13.3	12.7
	2 room	20 + 20	3.00	3.00	—	—	—	—	2.1	6.0	7.2	750	1540	1860	7.1	6.8	6.5
		20 + 25	2.84	3.56	—	—	—	—	2.1	6.4	7.7	750	1660	2210	7.6	7.3	7.0
		20 + 35	2.73	4.77	—	—	—	—	2.1	7.5	8.5	750	1990	2520	9.1	8.7	8.4
		20 + 50	2.51	6.29	—	—	—	—	2.1	8.8	10.0	750	2430	3220	11.2	10.7	10.2
		20 + 60	2.45	7.35	—	—	—	—	2.1	9.8	11.0	750	2840	3620	13.0	12.5	12.0
		20 + 71	2.42	8.58	—	—	—	—	2.1	11.0	11.6	750	2840	3620	13.0	12.5	12.0
		25 + 25	3.40	3.40	—	—	—	—	2.1	6.8	8.2	750	1770	2420	8.1	7.8	7.4
		25 + 35	3.29	4.61	—	—	—	—	2.1	7.9	9.0	750	2140	2820	9.8	9.4	9.0
		25 + 50	3.07	6.13	—	—	—	—	2.1	9.2	10.5	750	2630	3610	12.1	11.6	11.1
		25 + 60	3.00	7.20	—	—	—	—	2.1	10.2	11.5	750	3040	3790	14.0	13.4	12.8
		25 + 71	2.97	8.43	—	—	—	—	2.1	11.4	12.1	750	3440	4250	15.8	15.1	14.5
		35 + 35	4.50	4.50	—	—	—	—	2.1	9.0	9.8	750	2520	3210	11.6	11.1	10.6
		35 + 50	4.24	6.06	—	—	—	—	2.1	10.3	11.3	750	3040	3710	14.0	13.4	12.8
		35 + 60	4.16	7.14	—	—	—	—	2.1	11.3	12.3	750	3420	4320	15.7	15.0	14.4
		35 + 71	4.13	8.37	—	—	—	—	2.1	12.5	12.9	750	4030	4690	18.5	17.7	17.0
		50 + 50	5.80	5.80	—	—	—	—	2.1	11.6	12.8	750	3660	4620	16.8	16.1	15.4
		50 + 60	5.73	6.87	—	—	—	—	2.1	12.6	13.8	750	4090	5230	18.8	18.0	17.2
		50 + 71	5.58	7.92	—	—	—	—	2.1	13.5	13.8	750	4540	5230	20.8	19.9	19.1
		60 + 60	6.75	6.75	—	—	—	—	2.1	13.5	13.8	750	4540	5230	20.8	19.9	19.1
		60 + 71	6.18	7.32	—	—	—	—	2.1	13.5	13.8	750	4540	5230	20.8	19.9	19.1
		71 + 71	6.75	6.75	—	—	—	—	2.1	13.5	13.8	750	4530	5230	20.8	19.9	19.1
	3 room	20 + 20 + 20	3.00	3.00	3.00	—	—	—	3.2	9.0	10.9	780	2270	3350	10.4	10.0	9.6
		20 + 20 + 25	2.89	2.89	3.62	—	—	—	3.2	9.4	11.4	780	2400	3550	11.0	10.5	10.1
		20 + 20 + 35	2.80	2.80	4.90	—	—	—	3.2	10.5	12.2	780	2760	3820	12.7	12.1	11.6
		20 + 20 + 50	2.62	2.62	6.56	—	—	—	3.2	11.8	13.7	780	3270	4290	15.0	14.4	13.8
		20 + 20 + 60	2.56	2.56	7.68	—	—	—	3.2	12.8	13.8	780	3690	4350	16.9	16.2	15.5
		20 + 20 + 71	2.43	2.43	8.64	—	—	—	3.2	13.5	13.8	780	4140	4350	19.0	18.2	17.4
		20 + 25 + 25	2.80	3.50	3.50	—	—	—	3.2	9.8	11.9	780	2560	3720	11.8	11.2	10.8
		20 + 25 + 35	2.73	3.41	4.77	—	—	—	3.2	10.9	12.7	780	2970	3990	13.6	13.0	12.5
		20 + 25 + 50	2.57	3.21	6.42	—	—	—	3.2	12.2	13.8	780	3480	4350	16.0	15.3	14.6
		20 + 25 + 60	2.51	3.14	7.54	—	—	—	3.2	13.2	13.8	780	3990	4350	18.3	17.5	16.8
		20 + 25 + 71	2.33	2.91	8.26	—	—	—	3.2	13.5	13.8	780	4140	4350	19.0	18.2	17.4
		20 + 35 + 35	2.67	4.67	4.67	—	—	—	3.2	12.0	13.5	780	3460	4220	15.9	15.2	14.6
		20 + 35 + 50	2.53	4.43	6.33	—	—	—	3.2	13.3	13.8	780	3980	4350	18.3	17.5	16.8
		20 + 35 + 60	2.35	4.11	7.04	—	—	—	3.2	13.5	13.8	780	4130	4350	19.0	18.1	17.4
		20 + 35 + 71	2.14	3.75	7.61	—	—	—	3.2	13.5	13.8	780	4130	4350	19.0	18.1	17.4
		20 + 50 + 50	2.25	5.63	5.63	—	—	—	3.2	13.5	13.8	780	4130	4350	19.0	18.1	17.4

Indoor unit combination			Heating capacity (kW)									Power consumption (W)			Standard current (A)		
			Room heating capacity (kW)						Total capacity (kW)								
			A room	B room	C room	D room	E room	F room	Min.	Standard	Max.	Min.	Standard	Max.	220V	230V	240V
Heating operation	3 room	20 + 50 + 60	2.08	5.19	6.23	—	—	—	3.2	13.5	13.8	780	4130	4350	19.0	18.1	17.4
		20 + 50 + 71	1.91	4.79	6.80	—	—	—	4.2	13.5	13.8	780	4130	4350	18.8	18.0	17.2
		20 + 60 + 60	1.93	5.79	5.79	—	—	—	5.2	13.5	13.8	780	4130	4350	18.6	17.8	17.0
		20 + 60 + 71	1.79	5.36	6.35	—	—	—	6.2	13.5	13.8	780	4120	4350	18.4	17.6	16.8
		20 + 71 + 71	1.67	5.92	5.92	—	—	—	7.2	13.5	13.8	780	4120	4350	18.2	17.4	16.7
		25 + 25 + 25	3.40	3.40	3.40	—	—	—	3.2	10.2	12.4	780	2760	3880	12.7	12.1	11.6
		25 + 25 + 35	3.32	3.32	4.65	—	—	—	3.2	11.3	13.2	780	3170	4120	14.6	13.9	13.3
		25 + 25 + 50	3.15	3.15	6.30	—	—	—	3.2	12.6	13.8	780	3690	4350	16.9	16.2	15.5
		25 + 25 + 60	3.07	3.07	7.36	—	—	—	3.2	13.5	13.8	780	4130	4350	19.0	18.1	17.4
		25 + 25 + 71	2.79	2.79	7.92	—	—	—	3.2	13.5	13.8	780	4130	4350	19.0	18.1	17.4
		25 + 35 + 35	3.26	4.57	4.57	—	—	—	3.2	12.4	13.8	780	3780	4350	17.4	16.6	15.9
		25 + 35 + 50	3.07	4.30	6.14	—	—	—	3.2	13.5	13.8	780	4140	4350	19.0	18.2	17.4
		25 + 35 + 60	2.81	3.94	6.75	—	—	—	3.2	13.5	13.8	780	4140	4350	19.0	18.2	17.4
		25 + 35 + 71	2.58	3.61	7.32	—	—	—	4.2	13.5	13.8	780	4130	4350	18.8	18.0	17.2
		25 + 50 + 50	2.70	5.40	5.40	—	—	—	3.2	13.5	13.8	780	4130	4350	19.0	18.1	17.4
		25 + 50 + 60	2.50	5.00	6.00	—	—	—	3.2	13.5	13.8	780	4130	4350	19.0	18.1	17.4
		25 + 50 + 71	2.31	4.62	6.57	—	—	—	3.2	13.5	13.8	780	4130	4350	19.0	18.1	17.4
		25 + 60 + 60	2.33	5.59	5.59	—	—	—	3.2	13.5	13.8	780	4130	4350	19.0	18.1	17.4
		25 + 60 + 71	2.16	5.19	6.14	—	—	—	3.2	13.5	13.8	780	4120	4350	18.9	18.1	17.3
		25 + 71 + 71	2.02	5.74	5.74	—	—	—	3.2	13.5	13.8	780	4120	4350	18.9	18.1	17.3
		35 + 35 + 35	4.50	4.50	4.50	—	—	—	3.2	13.5	13.8	780	4140	4350	19.0	18.2	17.4
		35 + 35 + 50	3.94	3.94	5.63	—	—	—	3.2	13.5	13.8	780	4140	4350	19.0	18.2	17.4
		35 + 35 + 60	3.63	3.63	6.23	—	—	—	3.2	13.5	13.8	780	4130	4350	19.0	18.1	17.4
		35 + 35 + 71	3.35	3.35	6.80	—	—	—	3.2	13.5	13.8	780	4130	4350	19.0	18.1	17.4
		35 + 50 + 50	3.50	5.00	5.00	—	—	—	3.2	13.5	13.8	780	4130	4350	19.0	18.1	17.4
		35 + 50 + 60	3.26	4.66	5.59	—	—	—	3.2	13.5	13.8	780	4130	4350	19.0	18.1	17.4
		35 + 50 + 71	3.03	4.33	6.14	—	—	—	3.2	13.5	13.8	780	4120	4350	18.9	18.1	17.3
		35 + 60 + 60	3.05	5.23	5.23	—	—	—	3.2	13.5	13.8	780	4120	4350	18.9	18.1	17.3
		35 + 60 + 71	2.85	4.88	5.77	—	—	—	3.2	13.5	13.8	780	4120	4350	18.9	18.1	17.3
		35 + 71 + 71	2.67	5.42	5.42	—	—	—	3.2	13.5	13.8	780	4120	4350	18.9	18.1	17.3
		50 + 50 + 50	4.50	4.50	4.50	—	—	—	3.2	13.5	13.8	780	4120	4350	18.9	18.1	17.3
		50 + 50 + 60	4.22	4.22	5.06	—	—	—	3.2	13.5	13.8	780	4120	4350	18.9	18.1	17.3
		50 + 50 + 71	3.95	3.95	5.61	—	—	—	3.2	13.5	13.8	780	4120	4350	18.9	18.1	17.3
		50 + 60 + 60	3.97	4.76	4.76	—	—	—	3.2	13.5	13.8	780	4120	4350	18.9	18.1	17.3
		50 + 60 + 71	3.73	4.48	5.30	—	—	—	3.2	13.5	13.8	780	4110	4350	18.9	18.1	17.3
		60 + 60 + 60	4.50	4.50	4.50	—	—	—	3.2	13.5	13.8	780	4110	4350	18.9	18.1	17.3
		60 + 60 + 71	4.24	4.24	5.02	—	—	—	3.2	13.5	13.8	780	4110	4350	18.9	18.1	17.3
	4 room	20 + 20 + 20 + 20	3.00	3.00	3.00	3.00	—	—	3.6	12.0	13.8	950	3270	3920	14.9	14.2	13.6
		20 + 20 + 20 + 25	2.92	2.92	2.92	3.65	—	—	3.6	12.4	13.8	950	3460	3920	15.7	15.1	14.4
		20 + 20 + 20 + 35	2.84	2.84	2.84	4.97	—	—	3.6	13.5	13.8	950	3770	3920	17.2	16.4	15.7
		20 + 20 + 20 + 50	2.45	2.45	2.45	6.14	—	—	3.6	13.5	13.8	950	3760	3920	17.1	16.4	15.7
		20 + 20 + 20 + 60	2.25	2.25	2.25	6.75	—	—	3.6	13.5	13.8	950	3760	3920	17.1	16.4	15.7
		20 + 20 + 20 + 71	2.06	2.06	2.06	7.32	—	—	3.6	13.5	13.8	950	3750	3920	16.9	16.2	15.5
		20 + 20 + 25 + 25	2.84	2.84	3.56	3.56	—	—	3.6	12.8	13.8	950	3510	3920	16.0	15.3	14.6
		20 + 20 + 25 + 35	2.70	2.70	3.38	4.73	—	—	3.6	13.5	13.8	950	3770	3920	17.2	16.4	15.7
		20 + 20 + 25 + 50	2.35	2.35	2.93	5.87	—	—	3.6	13.5	13.8	950	3760	3920	17.1	16.4	15.7
		20 + 20 + 25 + 60	2.16	2.16	2.70	6.48	—	—	3.6	13.5	13.8	950	3750	3920	17.1	16.3	15.6
		20 + 20 + 25 + 71	1.99	1.99	2.48	7.05	—	—	3.6	13.5	13.8	950	3750	3920	17.1	16.3	15.6
		20 + 20 + 35 + 35	2.45	2.45	4.30	4.30	—	—	3.6	13.5	13.8	950	3760	3920	17.1	16.4	15.7
		20 + 20 + 35 + 50	2.16	2.16	3.78	5.40	—	—	3.6	13.5	13.8	950	3750	3920	17.1	16.3	15.6
		20 + 20 + 35 + 60	2.00	2.00	3.50	6.00	—	—	3.6	13.5	13.8	950	3750	3920	17.1	16.3	15.6
		20 + 20 + 35 + 71	1.85	1.85	3.24	6.57	—	—	3.6	13.5	13.8	950	3740	3920	17.0	16.3	15.6
		20 + 20 + 50 + 50	1.93	1.93	4.82	4.82	—	—	3.6	13.5	13.8	950	3740	3920	17.0	16.3	15.6
		20 + 20 + 50 + 60	1.80	1.80	4.50	5.40	—	—	3.6	13.5	13.8	950	3740	3920	17.0	16.3	15.6
		20 + 20 + 50 + 71	1.68	1.68	4.19	5.95	—	—	3.6	13.5	13.8	950	3740	3920	17.0	16.3	15.6
		20 + 20 + 60 + 60	1.69	1.69	5.06	5.06	—	—	3.6	13.5	13.8	950	3740	3920	17.0	16.3	15.6
		20 + 20 + 60 + 71	1.58	1.58	4.74	5.61	—	—	3.6	13.5	13.8	950	3730	3920	17.0	16.2	15.6
		20 + 20 + 71 + 71	1.48	1.48	5.27	5.27	—	—	3.6	13.5	13.8	950	3730	3920	17.0	16.2	15.6
		20 + 25 + 25 + 25	2.78	3.47	3.47	3.47	—	—	3.6	13.2	13.8	950	3620	3920	16.5	15.8	15.1
		20 + 25 + 25 + 35	2.57	3.21	3.21	4.50	—	—	3.6	13.5	13.8	950	3770	3920	17.2	16.4	15.7
		20 + 25 + 25 + 50	2.25	2.81	2.81	5.63	—	—	3.6	13.5	13.8	950	3760	3920	17.1	16.4	15.7
		20 + 25 + 25 + 60	2.08	2.60	2.60	6.23	—	—	3.6	13.5	13.8	950	3750	3920	17.1	16.3	15.6
		20 + 25 + 25 + 71	1.91	2.39	2.39	6.80	—	—	3.6	13.5	13.8	950	3740	3920	17.0	16.3	15.6
		20 + 25 + 35 + 35	2.35	2.93	4.11	4.11	—	—	3.6	13.5	13.8	950	3760	3920	17.1	16.4	15.7
		20 + 25 + 35 + 50	2.08	2.60	3.63	5.19	—	—	3.6	13.5	13.8	950	3750	3920	17.1	16.3	15.6
		20 + 25 + 35 + 60	1.93	2.41	3.38	5.79	—	—	3.6	13.5	13.8	950	3740	3920	17.0	16.3	15.6
		20 + 25 + 35 + 71	1.79	2.24	3.13	6.35	—	—	3.6	13.5	13.8	950	3740	3920	17.0	16.3	15.6
		20 + 25 + 50 + 50	1.86	2.33	4.66	4.66	—	—	3.6	13.5	13.8	950	3740	3920	17.0	16.3	15.6
		20 + 25 + 50 + 60	1.74	2.18	4.35	5.23	—	—	3.6	13.5	13.8	950	3740	3920	17.0	16.3	15.6
		20 + 25 + 50 + 71	1.63	2.03	4.07	5.77	—	—	3.6	13.5	13.8	950	3730	3920	17.0	16.2	15.6
		20 + 25 + 60 + 60	1.64	2.05	4.91	4.91	—	—	3.6	13.5	13.8	950	3730	3920	17.0	16.2	15.6
		20 + 25 + 60 + 71	1.53	1.92	4.60	5.45	—	—	3.6	13.5	13.8	950	3730	3920	17.0	16.2	15.6
		20 + 25 + 71 + 71	1.44	1.80	5.13	5.13	—	—	3.6	13.5	13.8	950	3720	3920	16.9	16.2	15.5
		20 + 35 + 35 + 35	2.16	3.78	3.78	3.78	—	—	3.6	13.5	13.8	950	3750	3920	17.1	16.3	15.6
		20 + 35 + 35 + 50	1.93	3.38	3.38	4.82	—	—	3.6	13.5	13.8	950	3740	3920	17.0	16.3	15.6
		20 + 35 + 35 + 60	1.80	3.15	3.15	5.40	—	—	3.6	13.5	13.8	950	3740	3920	17.0	16.3	15.6
		20 + 35 + 35 + 71	1.68	2.93	2.93	5.95	—	—	3.6	13.5	13.8	950	3740	3920	17.0	16.3	15.6
		20 + 35 + 50 + 50	1.74	3.05	4.35	4.35	—	—	3.6	13.5	13.8	950	3740	3920	17.0	16.3	15.6
		20 + 35 + 50 + 60	1.64	2.86	4.09	4.91	—	—	3.6	13.5	13.8	950	3730	3920	17.0	16.2	15.6
		20 + 35 + 50 + 71	1.53	2.68	3.84	5.45	—	—	3.6	13.5	13.8	950	3730	3920	17.0	16.2	15.6
		20 + 35 + 60 + 60	1.54	2.70	4.63	4.63	—	—	3.6	13.5	13.8	950	3730	3920	17.0	16.2	15.6
		20 + 35 + 60 + 71	1.45	2.54	4.35	5.15	—	—	3.6	13.5	13.8	950	3720	3920	16.9	16.2	15.5
		20 + 50 + 50 + 50	1.59	3.97	3.97	3.97	—	—	3.6	13.5	13.8	950	3730	3920	17.0	16.2	15.6
		20 + 50 + 50 + 60	1.50	3.75	3.75	4.50	—	—	3.6	13.5	13.8	950	3730	3920	17.0	16.2	15.6
		20 + 50 + 50 + 71	1.41	3.53	3.53	5.02	—	—	3.6	13.5	13.8	950	3720	3920	16.9	16.2	15.5
		20 + 50 + 60 + 60	1.42	3.55	4.26	4.26	—	—	3.6	13.5	13.8	950	3720	3920	16.9	16.2	15.5
		25 + 25 + 25 + 25	3.38	3.38	3.38	3.38	—	—	3.6	13.5	13.8	950	3770	3920	17.2	16.4	15.7
		25 + 25 + 25 + 35	3.07	3.07	3.07	4.30	—	—	3.6	13.5	13.8	950	3760	3920	17.1	16.4	15.7
		25 + 25 + 25 + 50	2.70	2.70	2.70	5.40	—	—	3.6	13.5	13.8	950	3750	3920	17.1	16.3	15.6
		25 + 25 + 25 + 60	2.50	2.50	2.50	6.00	—	—	3.6	13.5	13.8	950	3750	3920	17.1	16.3	15.6
		25 + 25 + 25 + 71	2.31	2.31	2.31	6.57	—	—	3.6	13.5	13.8	950	3740	3920	17.0	16.3	15.6
		25 + 25 + 35 + 35	2.81	2.81	3.94	3.94	—	—	3.6	13.5	13.8	950	3760	3920	17.1	16.4	15.7
		25 + 25 + 35 + 50	2.50	2.50	3.50	5.00	—	—	3.6	13.5	13.8	950	3750	3920	17.1	16.3	15.6

Indoor unit combination			Heating capacity (kW)									Power consumption (W)			Standard current (A)		
			Room heating capacity (kW)						Total capacity (kW)								
			A room	B room	C room	D room	E room	F room	Min.	Standard	Max.	Min.	Standard	Max.	220V	230V	240V
Heating operation	4 room	25 + 25 + 35 + 60	2.33	2.33	3.26	5.59	—	—	3.6	13.5	13.8	950	3740	3920	17.0	16.3	15.6
		25 + 25 + 35 + 71	2.16	2.16	3.03	6.14	—	—	3.6	13.5	13.8	950	3740	3920	17.0	16.3	15.6
		25 + 25 + 50 + 50	2.25	2.25	4.50	4.50	—	—	3.6	13.5	13.8	950	3740	3920	17.0	16.3	15.6
		25 + 25 + 50 + 60	2.11	2.11	4.22	5.06	—	—	3.6	13.5	13.8	950	3740	3920	17.0	16.3	15.6
		25 + 25 + 50 + 71	1.97	1.97	3.95	5.61	—	—	3.6	13.5	13.8	950	3730	3920	17.0	16.2	15.6
		25 + 25 + 60 + 60	1.99	1.99	4.76	4.76	—	—	3.6	13.5	13.8	950	3730	3920	17.0	16.2	15.6
		25 + 25 + 60 + 71	1.86	1.86	4.48	5.30	—	—	3.6	13.5	13.8	950	3730	3920	17.0	16.2	15.6
		25 + 25 + 71 + 71	1.76	1.76	4.99	4.99	—	—	3.6	13.5	13.8	950	3720	3920	16.9	16.2	15.5
		25 + 35 + 35 + 35	2.60	3.63	3.63	3.63	—	—	3.6	13.5	13.8	950	3750	3920	17.1	16.3	15.6
		25 + 35 + 35 + 50	2.33	3.26	3.26	4.66	—	—	3.6	13.5	13.8	950	3740	3920	17.0	16.3	15.6
		25 + 35 + 35 + 60	2.18	3.05	3.05	5.23	—	—	3.6	13.5	13.8	950	3740	3920	17.0	16.3	15.6
		25 + 35 + 35 + 71	2.03	2.85	2.85	5.77	—	—	3.6	13.5	13.8	950	3730	3920	17.0	16.2	15.6
		25 + 35 + 50 + 50	2.11	2.95	4.22	4.22	—	—	3.6	13.5	13.8	950	3740	3920	17.0	16.3	15.6
		25 + 35 + 50 + 60	1.99	2.78	3.97	4.76	—	—	3.6	13.5	13.8	950	3730	3920	17.0	16.2	15.6
		25 + 35 + 50 + 71	1.86	2.61	3.73	5.30	—	—	3.6	13.5	13.8	950	3730	3920	17.0	16.2	15.6
		25 + 35 + 60 + 60	1.88	2.63	4.50	4.50	—	—	3.6	13.5	13.8	950	3730	3920	17.0	16.2	15.6
		25 + 35 + 60 + 71	1.77	2.47	4.24	5.02	—	—	3.6	13.5	13.8	950	3720	3920	16.9	16.2	15.5
		25 + 50 + 50 + 50	1.93	3.86	3.86	3.86	—	—	3.6	13.5	13.8	950	3730	3920	17.0	16.2	15.6
		25 + 50 + 50 + 60	1.82	3.65	3.65	4.38	—	—	3.6	13.5	13.8	950	3720	3920	16.9	16.2	15.5
		25 + 50 + 60 + 60	1.73	3.46	4.15	4.15	—	—	3.6	13.5	13.8	950	3720	3920	16.9	16.2	15.5
		35 + 35 + 35 + 35	3.38	3.38	3.38	3.38	—	—	3.6	13.5	13.8	950	3740	3920	17.0	16.3	15.6
		35 + 35 + 35 + 50	3.05	3.05	3.05	4.35	—	—	3.6	13.5	13.8	950	3740	3920	17.0	16.3	15.6
		35 + 35 + 35 + 60	2.86	2.86	2.86	4.91	—	—	3.6	13.5	13.8	950	3730	3920	17.0	16.2	15.6
		35 + 35 + 35 + 71	2.68	2.68	2.68	5.45	—	—	3.6	13.5	13.8	950	3730	3920	17.0	16.2	15.6
		35 + 35 + 50 + 50	2.78	2.78	3.97	3.97	—	—	3.6	13.5	13.8	950	3730	3920	17.0	16.2	15.6
		35 + 35 + 50 + 60	2.63	2.63	3.75	4.50	—	—	3.6	13.5	13.8	950	3730	3920	17.0	16.2	15.6
		35 + 35 + 50 + 71	2.47	2.47	3.53	5.02	—	—	3.6	13.5	13.8	950	3720	3920	16.9	16.2	15.5
		35 + 35 + 60 + 60	2.49	2.49	4.26	4.26	—	—	3.6	13.5	13.8	950	3720	3920	16.9	16.2	15.5
		35 + 50 + 50 + 50	2.55	3.65	3.65	3.65	—	—	3.6	13.5	13.8	950	3720	3920	16.9	16.2	15.5
		35 + 50 + 50 + 60	2.42	3.46	3.46	4.15	—	—	3.6	13.5	13.8	950	3720	3920	16.9	16.2	15.5
	5 room	20 + 20 + 20 + 20 + 20	2.70	2.70	2.70	2.70	2.70	—	4.0	13.5	13.8	1050	3450	3470	15.7	15.0	14.4
		20 + 20 + 20 + 20 + 25	2.57	2.57	2.57	2.57	3.21	—	4.0	13.5	13.8	1050	3450	3470	15.7	15.0	14.4
		20 + 20 + 20 + 20 + 35	2.35	2.35	2.35	2.35	4.11	—	4.0	13.5	13.8	1050	3440	3470	15.7	15.0	14.3
		20 + 20 + 20 + 20 + 50	2.08	2.08	2.08	2.08	5.19	—	4.0	13.5	13.8	1050	3430	3470	15.6	14.9	14.3
		20 + 20 + 20 + 20 + 60	1.93	1.93	1.93	1.93	5.79	—	4.0	13.5	13.8	1050	3430	3470	15.6	14.9	14.3
		20 + 20 + 20 + 20 + 71	1.79	1.79	1.79	1.79	6.35	—	4.0	13.5	13.8	1050	3420	3470	15.6	14.9	14.3
		20 + 20 + 20 + 25 + 25	2.45	2.45	2.45	3.07	3.07	—	4.0	13.5	13.8	1050	3450	3470	15.7	15.0	14.4
		20 + 20 + 20 + 25 + 35	2.25	2.25	2.25	2.81	3.94	—	4.0	13.5	13.8	1050	3440	3470	15.7	15.0	14.3
		20 + 20 + 20 + 25 + 50	2.00	2.00	2.00	2.50	5.00	—	4.0	13.5	13.8	1050	3430	3470	15.6	14.9	14.3
		20 + 20 + 20 + 25 + 60	1.86	1.86	1.86	2.33	5.59	—	4.0	13.5	13.8	1050	3420	3470	15.6	14.9	14.3
		20 + 20 + 20 + 25 + 71	1.73	1.73	1.73	2.16	6.14	—	4.0	13.5	13.8	1050	3420	3470	15.6	14.9	14.3
		20 + 20 + 20 + 35 + 35	2.08	2.08	2.08	3.63	3.63	—	4.0	13.5	13.8	1050	3430	3470	15.6	14.9	14.3
		20 + 20 + 20 + 35 + 50	1.86	1.86	1.86	3.26	4.66	—	4.0	13.5	13.8	1050	3420	3470	15.6	14.9	14.3
		20 + 20 + 20 + 35 + 60	1.74	1.74	1.74	3.05	5.23	—	4.0	13.5	13.8	1050	3420	3470	15.6	14.9	14.3
		20 + 20 + 20 + 35 + 71	1.63	1.63	1.63	2.85	5.77	—	4.0	13.5	13.8	1050	3410	3470	15.5	14.8	14.2
		20 + 20 + 20 + 50 + 50	1.69	1.69	1.69	4.22	4.22	—	4.0	13.5	13.8	1050	3410	3470	15.5	14.8	14.2
		20 + 20 + 20 + 50 + 60	1.59	1.59	1.59	3.97	4.76	—	4.0	13.5	13.8	1050	3410	3470	15.5	14.8	14.2
		20 + 20 + 20 + 60 + 60	1.50	1.50	1.50	4.50	4.50	—	4.0	13.5	13.8	1050	3400	3470	15.5	14.8	14.2
		20 + 20 + 20 + 60 + 71	1.41	1.41	1.41	4.24	5.02	—	4.0	13.5	13.8	1050	3390	3470	15.4	14.8	14.1
		20 + 20 + 25 + 25 + 25	2.35	2.35	2.93	2.93	2.93	—	4.0	13.5	13.8	1050	3440	3470	15.7	15.0	14.3
		20 + 20 + 25 + 25 + 35	2.16	2.16	2.70	2.70	3.78	—	4.0	13.5	13.8	1050	3440	3470	15.7	15.0	14.3
		20 + 20 + 25 + 25 + 50	1.93	1.93	2.41	2.41	4.82	—	4.0	13.5	13.8	1050	3430	3470	15.6	14.9	14.3
		20 + 20 + 25 + 25 + 60	1.80	1.80	2.25	2.25	5.40	—	4.0	13.5	13.8	1050	3420	3470	15.6	14.9	14.3
		20 + 20 + 25 + 25 + 71	1.68	1.68	2.10	2.10	5.95	—	4.0	13.5	13.8	1050	3410	3470	15.5	14.8	14.2
		20 + 20 + 25 + 35 + 35	2.00	2.00	2.50	3.50	3.50	—	4.0	13.5	13.8	1050	3430	3470	15.6	14.9	14.3
		20 + 20 + 25 + 35 + 50	1.80	1.80	2.25	3.15	4.50	—	4.0	13.5	13.8	1050	3420	3470	15.6	14.9	14.3
		20 + 20 + 25 + 35 + 60	1.69	1.69	2.11	2.95	5.06	—	4.0	13.5	13.8	1050	3410	3470	15.5	14.8	14.2
		20 + 20 + 25 + 35 + 71	1.58	1.58	1.97	2.76	5.61	—	4.0	13.5	13.8	1050	3410	3470	15.5	14.8	14.2
		20 + 20 + 25 + 50 + 50	1.64	1.64	2.05	4.09	4.09	—	4.0	13.5	13.8	1050	3410	3470	15.5	14.8	14.2
		20 + 20 + 25 + 50 + 60	1.54	1.54	1.93	3.86	4.63	—	4.0	13.5	13.8	1050	3410	3470	15.5	14.8	14.2
		20 + 20 + 25 + 50 + 71	1.45	1.45	1.81	3.63	5.15	—	4.0	13.5	13.8	1050	3400	3470	15.5	14.8	14.2
		20 + 20 + 25 + 60 + 60	1.46	1.46	1.82	4.38	4.38	—	4.0	13.5	13.8	1050	3400	3470	15.5	14.8	14.2
		20 + 20 + 35 + 35 + 35	1.86	1.86	3.26	3.26	3.26	—	4.0	13.5	13.8	1050	3420	3470	15.6	14.9	14.3
		20 + 20 + 35 + 35 + 50	1.69	1.69	2.95	2.95	4.22	—	4.0	13.5	13.8	1050	3410	3470	15.5	14.8	14.2
		20 + 20 + 35 + 35 + 60	1.59	1.59	2.78	2.78	4.76	—	4.0	13.5	13.8	1050	3410	3470	15.5	14.8	14.2
		20 + 20 + 35 + 35 + 71	1.49	1.49	2.61	2.61	5.30	—	4.0	13.5	13.8	1050	3400	3470	15.5	14.8	14.2
		20 + 20 + 35 + 50 + 50	1.54	1.54	2.70	3.86	3.86	—	4.0	13.5	13.8	1050	3410	3470	15.5	14.8	14.2
		20 + 20 + 35 + 50 + 60	1.46	1.46	2.55	3.65	4.38	—	4.0	13.5	13.8	1050	3400	3470	15.5	14.8	14.2
		20 + 20 + 35 + 60 + 60	1.38	1.38	2.42	4.15	4.15	—	4.0	13.5	13.8	1050	3390	3470	15.4	14.8	14.1
		20 + 20 + 50 + 50 + 50	1.42	1.42	3.55	3.55	3.55	—	4.0	13.5	13.8	1050	3390	3470	15.4	14.8	14.1
		20 + 25 + 25 + 25 + 25	2.25	2.81	2.81	2.81	2.81	—	4.0	13.5	13.8	1050	3440	3470	15.7	15.0	14.3
		20 + 25 + 25 + 25 + 35	2.08	2.60	2.60	2.60	3.63	—	4.0	13.5	13.8	1050	3430	3470	15.6	14.9	14.3
		20 + 25 + 25 + 25 + 50	1.86	2.33	2.33	2.33	4.66	—	4.0	13.5	13.8	1050	3420	3470	15.6	14.9	14.3
		20 + 25 + 25 + 25 + 60	1.74	2.18	2.18	2.18	5.23	—	4.0	13.5	13.8	1050	3420	3470	15.6	14.9	14.3
		20 + 25 + 25 + 25 + 71	1.63	2.03	2.03	2.03	5.77	—	4.0	13.5	13.8	1050	3410	3470	15.5	14.8	14.2
		20 + 25 + 25 + 35 + 35	1.93	2.41	2.41	3.38	3.38	—	4.0	13.5	13.8	1050	3430	3470	15.6	14.9	14.3
		20 + 25 + 25 + 35 + 50	1.74	2.18	2.18	3.05	4.35	—	4.0	13.5	13.8	1050	3420	3470	15.6	14.9	14.3
		20 + 25 + 25 + 35 + 60	1.64	2.05	2.05	2.86	4.91	—	4.0	13.5	13.8	1050	3410	3470	15.5	14.8	14.2
		20 + 25 + 25 + 35 + 71	1.53	1.92	1.92	2.68	5.45	—	4.0	13.5	13.8	1050	3410	3470	15.5	14.8	14.2
		20 + 25 + 25 + 50 + 50	1.59	1.99	1.99	3.97	3.97	—	4.0	13.5	13.8	1050	3410	3470	15.5	14.8	14.2
		20 + 25 + 25 + 50 + 60	1.50	1.88	1.88	3.75	4.50	—	4.0	13.5	13.8	1050	3400	3470	15.5	14.8	14.2
		20 + 25 + 25 + 50 + 71	1.41	1.77	1.77	3.53	5.02	—	4.0	13.5	13.8	1050	3390	3470	15.4	14.8	14.1
		20 + 25 + 25 + 60 + 60	1.42	1.78	1.78	4.26	4.26	—	4.0	13.5	13.8	1050	3390	3470	15.4	14.8	14.1
		20 + 25 + 35 + 35 + 35	1.80	2.25	3.15	3.15	3.15	—	4.0	13.5	13.8	1050	3420	3470	15.6	14.9	14.3
		20 + 25 + 35 + 35 + 50	1.64	2.05	2.86	2.86	4.09	—	4.0	13.5	13.8	1050	3410	3470	15.5	14.8	14.2
		20 + 25 + 35 + 35 + 60	1.54	1.93	2.70	2.70	4.63	—	4.0	13.5	13.8	1050	3410	3470	15.5	14.8	14.2
		20 + 25 + 35 + 35 + 71	1.45	1.81	2.54	2.54	5.15	—	4.0	13.5	13.8	1050	3400	3470	15.5	14.8	14.2
		20 + 25 + 35 + 50 + 50	1.50	1.88	2.63	3.75	3.75	—	4.0	13.5	13.8	1050	3400	3470	15.5	14.8	14.2
		20 + 25 + 35 + 50 + 60	1.42	1.78	2.49	3.55	4.26	—	4.0	13.5	13.8	1050	3390	3470	15.4	14.8	14.1
		20 + 25 + 50 + 50 + 50	1.38	1.73	3.46	3.46	3.46	—	4.0	13.5	13.8	1050	3390	3470	15.4	14.8	14.1
		20 + 35 + 35 + 35 + 35	1.69	2.95	2.95	2.95	2.95	—	4.0	13.5	13.8	1050	3410	3470	15.5	14.8	14.2
		20 + 35 + 35 + 35 + 50	1.54	2.70	2.70	2.70	3.86	—	4.0	13.5	13.8	1050	3410	3470	15.5	14.8	14.2
		20 + 35 + 35 + 35 + 60	1.46	2.55	2.55	2.55	4.38	—	4.0	13.5	13.8	1050	3400	3470	15.5	14.8	14.2

		Heating capacity (kW)									Power consumption (W)			Standard current (A)		
Indoor unit combination		Room heating capacity (kW)						Total capacity (kW)			Min.	Standard	Max.	220V	230V	240V
		A room	B room	C room	D room	E room	F room	Min.	Standard	Max.						
Heating operation	5 room	20 + 35 + 35 + 50 + 50	1.42	2.49	2.49	3.55	3.55	—	4.0	13.5	13.8	1050	3390	3470	15.4	14.8	14.1
		25 + 25 + 25 + 25 + 25	2.70	2.70	2.70	2.70	2.70	—	4.0	13.5	13.8	1050	3440	3470	15.7	15.0	14.3
		25 + 25 + 25 + 25 + 35	2.50	2.50	2.50	2.50	3.50	—	4.0	13.5	13.8	1050	3430	3470	15.6	14.9	14.3
		25 + 25 + 25 + 25 + 50	2.25	2.25	2.25	2.25	4.50	—	4.0	13.5	13.8	1050	3420	3470	15.6	14.9	14.3
		25 + 25 + 25 + 25 + 60	2.11	2.11	2.11	2.11	5.06	—	4.0	13.5	13.8	1050	3410	3470	15.5	14.8	14.2
		25 + 25 + 25 + 25 + 71	1.97	1.97	1.97	1.97	5.61	—	4.0	13.5	13.8	1050	3410	3470	15.5	14.8	14.2
		25 + 25 + 25 + 35 + 35	2.33	2.33	2.33	3.26	3.26	—	4.0	13.5	13.8	1050	3420	3470	15.6	14.9	14.3
		25 + 25 + 25 + 35 + 50	2.11	2.11	2.11	2.95	4.22	—	4.0	13.5	13.8	1050	3410	3470	15.5	14.8	14.2
		25 + 25 + 25 + 35 + 60	1.99	1.99	1.99	2.78	4.76	—	4.0	13.5	13.8	1050	3410	3470	15.5	14.8	14.2
		25 + 25 + 25 + 35 + 71	1.86	1.86	1.86	2.61	5.30	—	4.0	13.5	13.8	1050	3400	3470	15.5	14.8	14.2
		25 + 25 + 25 + 50 + 50	1.93	1.93	1.93	3.86	3.86	—	4.0	13.5	13.8	1050	3410	3470	15.5	14.8	14.2
		25 + 25 + 25 + 50 + 60	1.82	1.82	1.82	3.65	4.38	—	4.0	13.5	13.8	1050	3400	3470	15.5	14.8	14.2
		25 + 25 + 25 + 60 + 60	1.73	1.73	1.73	4.15	4.15	—	4.0	13.5	13.8	1050	3390	3470	15.4	14.8	14.1
		25 + 25 + 35 + 35 + 35	2.18	2.18	3.05	3.05	3.05	—	4.0	13.5	13.8	1050	3420	3470	15.6	14.9	14.3
		25 + 25 + 35 + 35 + 50	1.99	1.99	2.78	2.78	3.97	—	4.0	13.5	13.8	1050	3410	3470	15.5	14.8	14.2
		25 + 25 + 35 + 35 + 60	1.88	1.88	2.63	2.63	4.50	—	4.0	13.5	13.8	1050	3400	3470	15.5	14.8	14.2
		25 + 25 + 35 + 35 + 71	1.77	1.77	2.47	2.47	5.02	—	4.0	13.5	13.8	1050	3390	3470	15.4	14.8	14.1
		25 + 25 + 35 + 50 + 50	1.82	1.82	2.55	3.65	3.65	—	4.0	13.5	13.8	1050	3400	3470	15.5	14.8	14.2
		25 + 25 + 35 + 50 + 60	1.73	1.73	2.42	3.46	4.15	—	4.0	13.5	13.8	1050	3390	3470	15.4	14.8	14.1
		25 + 35 + 35 + 35 + 35	2.05	2.86	2.86	2.86	2.86	—	4.0	13.5	13.8	1050	3410	3470	15.5	14.8	14.2
		25 + 35 + 35 + 35 + 50	1.88	2.63	2.63	2.63	3.75	—	4.0	13.5	13.8	1050	3400	3470	15.5	14.8	14.2
		25 + 35 + 35 + 35 + 60	1.78	2.49	2.49	2.49	4.26	—	4.0	13.5	13.8	1050	3390	3470	15.4	14.8	14.1
		25 + 35 + 35 + 50 + 50	1.73	2.42	2.42	3.46	3.46	—	4.0	13.5	13.8	1050	3390	3470	15.4	14.8	14.1
		35 + 35 + 35 + 35 + 35	2.70	2.70	2.70	2.70	2.70	—	4.0	13.5	13.8	1050	3410	3470	15.5	14.8	14.2
		35 + 35 + 35 + 35 + 50	2.49	2.49	2.49	2.49	3.55	—	4.0	13.5	13.8	1050	3390	3470	15.4	14.8	14.1
	6 room	20 + 20 + 20 + 20 + 20 + 20	2.25	2.25	2.25	2.25	2.25	2.25	4.5	13.5	13.8	1150	3330	3420	15.2	14.5	13.9
		20 + 20 + 20 + 20 + 20 + 25	2.16	2.16	2.16	2.16	2.16	2.70	4.5	13.5	13.8	1150	3330	3420	15.2	14.5	13.9
		20 + 20 + 20 + 20 + 20 + 35	2.00	2.00	2.00	2.00	2.00	3.50	4.5	13.5	13.8	1150	3330	3420	15.2	14.5	13.9
		20 + 20 + 20 + 20 + 20 + 50	1.80	1.80	1.80	1.80	1.80	4.50	4.5	13.5	13.8	1150	3320	3420	15.1	14.4	13.8
		20 + 20 + 20 + 20 + 20 + 60	1.69	1.69	1.69	1.69	1.69	5.06	4.5	13.5	13.8	1150	3320	3420	15.1	14.4	13.8
		20 + 20 + 20 + 20 + 20 + 71	1.58	1.58	1.58	1.58	1.58	5.61	4.5	13.5	13.8	1150	3310	3420	15.1	14.4	13.8
		20 + 20 + 20 + 20 + 25 + 25	2.08	2.08	2.08	2.08	2.60	2.60	4.5	13.5	13.8	1150	3330	3420	15.2	14.5	13.9
		20 + 20 + 20 + 20 + 25 + 35	1.93	1.93	1.93	1.93	2.41	3.38	4.5	13.5	13.8	1150	3320	3420	15.1	14.4	13.8
		20 + 20 + 20 + 20 + 25 + 50	1.74	1.74	1.74	1.74	2.18	4.35	4.5	13.5	13.8	1150	3320	3420	15.1	14.4	13.8
		20 + 20 + 20 + 20 + 25 + 60	1.64	1.64	1.64	1.64	2.05	4.91	4.5	13.5	13.8	1150	3320	3420	15.1	14.4	13.8
		20 + 20 + 20 + 20 + 25 + 71	1.53	1.53	1.53	1.53	1.92	5.45	4.5	13.5	13.8	1150	3310	3420	15.1	14.4	13.8
		20 + 20 + 20 + 20 + 35 + 35	1.80	1.80	1.80	1.80	3.15	3.15	4.5	13.5	13.8	1150	3320	3420	15.1	14.4	13.8
		20 + 20 + 20 + 20 + 35 + 50	1.64	1.64	1.64	1.64	2.86	4.09	4.5	13.5	13.8	1150	3320	3420	15.1	14.4	13.8
		20 + 20 + 20 + 20 + 35 + 60	1.54	1.54	1.54	1.54	2.70	4.63	4.5	13.5	13.8	1150	3310	3420	15.1	14.4	13.8
		20 + 20 + 20 + 20 + 35 + 71	1.45	1.45	1.45	1.45	2.54	5.15	4.5	13.5	13.8	1150	3310	3420	15.1	14.4	13.8
		20 + 20 + 20 + 20 + 50 + 50	1.50	1.50	1.50	1.50	3.75	3.75	4.5	13.5	13.8	1150	3310	3420	15.1	14.4	13.8
		20 + 20 + 20 + 20 + 50 + 60	1.42	1.42	1.42	1.42	3.55	4.26	4.5	13.5	13.8	1150	3310	3420	15.1	14.4	13.8
		20 + 20 + 20 + 25 + 25 + 25	2.00	2.00	2.00	2.50	2.50	2.50	4.5	13.5	13.8	1150	3330	3420	15.2	14.5	13.9
		20 + 20 + 20 + 25 + 25 + 35	1.86	1.86	1.86	2.33	2.33	3.26	4.5	13.5	13.8	1150	3320	3420	15.1	14.4	13.8
		20 + 20 + 20 + 25 + 25 + 50	1.69	1.69	1.69	2.11	2.11	4.22	4.5	13.5	13.8	1150	3320	3420	15.1	14.4	13.8
		20 + 20 + 20 + 25 + 25 + 60	1.59	1.59	1.59	1.99	1.99	4.76	4.5	13.5	13.8	1150	3310	3420	15.1	14.4	13.8
		20 + 20 + 20 + 25 + 25 + 71	1.49	1.49	1.49	1.86	1.86	5.30	4.5	13.5	13.8	1150	3310	3420	15.1	14.4	13.8
		20 + 20 + 20 + 25 + 35 + 35	1.74	1.74	1.74	2.18	3.05	3.05	4.5	13.5	13.8	1150	3320	3420	15.1	14.4	13.8
		20 + 20 + 20 + 25 + 35 + 50	1.59	1.59	1.59	1.99	2.78	3.97	4.5	13.5	13.8	1150	3310	3420	15.1	14.4	13.8
		20 + 20 + 20 + 25 + 35 + 60	1.50	1.50	1.50	1.88	2.63	4.50	4.5	13.5	13.8	1150	3310	3420	15.1	14.4	13.8
		20 + 20 + 20 + 25 + 50 + 50	1.46	1.46	1.46	1.82	3.65	3.65	4.5	13.5	13.8	1150	3310	3420	15.1	14.4	13.8
		20 + 20 + 20 + 25 + 50 + 60	1.38	1.38	1.38	1.73	3.46	4.15	4.5	13.5	13.8	1150	3310	3420	15.1	14.4	13.8
		20 + 20 + 20 + 35 + 35 + 35	1.64	1.64	1.64	2.86	2.86	2.86	4.5	13.5	13.8	1150	3320	3420	15.1	14.4	13.8
		20 + 20 + 20 + 35 + 35 + 50	1.50	1.50	1.50	2.63	2.63	3.75	4.5	13.5	13.8	1150	3310	3420	15.1	14.4	13.8
		20 + 20 + 20 + 35 + 35 + 60	1.42	1.42	1.42	2.49	2.49	4.26	4.5	13.5	13.8	1150	3310	3420	15.1	14.4	13.8
		20 + 20 + 20 + 35 + 50 + 50	1.38	1.38	1.38	2.42	3.46	3.46	4.5	13.5	13.8	1150	3310	3420	15.1	14.4	13.8
		20 + 20 + 25 + 25 + 25 + 25	1.93	1.93	2.41	2.41	2.41	2.41	4.5	13.5	13.8	1150	3320	3420	15.1	14.4	13.8
		20 + 20 + 25 + 25 + 25 + 35	1.80	1.80	2.25	2.25	2.25	3.15	4.5	13.5	13.8	1150	3320	3420	15.1	14.4	13.8
		20 + 20 + 25 + 25 + 25 + 50	1.64	1.64	2.05	2.05	2.05	4.09	4.5	13.5	13.8	1150	3320	3420	15.1	14.4	13.8
		20 + 20 + 25 + 25 + 25 + 60	1.54	1.54	1.93	1.93	1.93	4.63	4.5	13.5	13.8	1150	3310	3420	15.1	14.4	13.8
		20 + 20 + 25 + 25 + 25 + 71	1.45	1.45	1.81	1.81	1.81	5.15	4.5	13.5	13.8	1150	3310	3420	15.1	14.4	13.8
		20 + 20 + 25 + 25 + 35 + 35	1.69	1.69	2.11	2.11	2.95	2.95	4.5	13.5	13.8	1150	3320	3420	15.1	14.4	13.8
		20 + 20 + 25 + 25 + 35 + 50	1.54	1.54	1.93	1.93	2.70	3.86	4.5	13.5	13.8	1150	3310	3420	15.1	14.4	13.8
		20 + 20 + 25 + 25 + 35 + 60	1.46	1.46	1.82	1.82	2.55	4.38	4.5	13.5	13.8	1150	3310	3420	15.1	14.4	13.8
		20 + 20 + 25 + 25 + 50 + 50	1.42	1.42	1.78	1.78	3.55	3.55	4.5	13.5	13.8	1150	3310	3420	15.1	14.4	13.8
		20 + 20 + 25 + 35 + 35 + 35	1.59	1.59	1.99	2.78	2.78	2.78	4.5	13.5	13.8	1150	3310	3420	15.1	14.4	13.8
		20 + 20 + 25 + 35 + 35 + 50	1.46	1.46	1.82	2.55	2.55	3.65	4.5	13.5	13.8	1150	3310	3420	15.1	14.4	13.8
		20 + 20 + 25 + 35 + 35 + 60	1.38	1.38	1.73	2.42	2.42	4.15	4.5	13.5	13.8	1150	3310	3420	15.1	14.4	13.8
		20 + 20 + 35 + 35 + 35 + 35	1.50	1.50	2.63	2.63	2.63	2.63	4.5	13.5	13.8	1150	3310	3420	15.1	14.4	13.8
		20 + 20 + 35 + 35 + 35 + 50	1.38	1.38	2.42	2.42	2.42	3.46	4.5	13.5	13.8	1150	3310	3420	15.1	14.4	13.8
		20 + 25 + 25 + 25 + 25 + 25	1.86	2.33	2.33	2.33	2.33	2.33	4.5	13.5	13.8	1150	3320	3420	15.1	14.4	13.8
		20 + 25 + 25 + 25 + 25 + 35	1.74	2.18	2.18	2.18	2.18	3.05	4.5	13.5	13.8	1150	3320	3420	15.1	14.4	13.8
		20 + 25 + 25 + 25 + 25 + 50	1.59	1.99	1.99	1.99	1.99	3.97	4.5	13.5	13.8	1150	3310	3420	15.1	14.4	13.8
		20 + 25 + 25 + 25 + 25 + 60	1.50	1.88	1.88	1.88	1.88	4.50	4.5	13.5	13.8	1150	3310	3420	15.1	14.4	13.8
		20 + 25 + 25 + 25 + 25 + 71	1.41	1.77	1.77	1.77	1.77	5.02	4.5	13.5	13.8	1150	3310	3420	15.1	14.4	13.8
		20 + 25 + 25 + 25 + 35 + 35	1.64	2.05	2.05	2.05	2.86	2.86	4.5	13.5	13.8	1150	3320	3420	15.1	14.4	13.8
		20 + 25 + 25 + 25 + 35 + 50	1.50	1.88	1.88	1.88	2.63	3.75	4.5	13.5	13.8	1150	3310	3420	15.1	14.4	13.8
		20 + 25 + 25 + 25 + 35 + 60	1.42	1.78	1.78	1.78	2.49	4.26	4.5	13.5	13.8	1150	3310	3420	15.1	14.4	13.8
		20 + 25 + 25 + 25 + 50 + 50	1.38	1.73	1.73	1.73	3.46	3.46	4.5	13.5	13.8	1150	3310	3420	15.1	14.4	13.8
		20 + 25 + 25 + 35 + 35 + 35	1.54	1.93	1.93	2.70	2.70	2.70	4.5	13.5	13.8	1150	3310	3420	15.1	14.4	13.8
		20 + 25 + 25 + 35 + 35 + 50	1.42	1.78	1.78	2.49	2.49	3.55	4.5	13.5	13.8	1150	3310	3420	15.1	14.4	13.8
		20 + 25 + 35 + 35 + 35 + 35	1.46	1.82	2.55	2.55	2.55	2.55	4.5	13.5	13.8	1150	3310	3420	15.1	14.4	13.8
		20 + 35 + 35 + 35 + 35 + 35	1.38	2.42	2.42	2.42	2.42	2.42	4.5	13.5	13.8	1150	3310	3420	15.1	14.4	13.8
		25 + 25 + 25 + 25 + 25 + 25	2.25	2.25	2.25	2.25	2.25	2.25	4.5	13.5	13.8	1150	3320	3420	15.1	14.4	13.8
		25 + 25 + 25 + 25 + 25 + 35	2.11	2.11	2.11	2.11	2.11	2.95	4.5	13.5	13.8	1150	3320	3420	15.1	14.4	13.8
		25 + 25 + 25 + 25 + 25 + 50	1.93	1.93	1.93	1.93	1.93	3.86	4.5	13.5	13.8	1150	3310	3420	15.1	14.4	13.8
		25 + 25 + 25 + 25 + 25 + 60	1.82	1.82	1.82	1.82	1.82	4.38	4.5	13.5	13.8	1150	3310	3420	15.1	14.4	13.8
		25 + 25 + 25 + 25 + 35 + 35	1.99	1.99	1.99	1.99	2.78	2.78	4.5	13.5	13.8	1150	3310	3420	15.1	14.4	13.8
		25 + 25 + 25 + 25 + 35 + 50	1.82	1.82	1.82	1.82	2.55	3.65	4.5	13.5	13.8	1150	3310	3420	15.1	14.4	13.8
		25 + 25 + 25 + 25 + 35 + 60	1.73	1.73	1.73	1.73	2.42	4.15	4.5	13.5	13.8	1150	3310	3420	15.1	14.4	13.8
		25 + 25 + 25 + 35 + 35 + 35	1.88	1.88	1.88	2.63	2.63	2.63	4.5	13.5	13.8	1150	3310	3420	15.1	14.4	13.8
		25 + 25 + 25 + 35 + 35 + 50	1.73	1.73	1.73	2.42	2.42	3.46	4.5	13.5	13.8	1150	3310	3420	15.1	14.4	13.8
		25 + 25 + 35 + 35 + 35 + 35	1.78	1.78	2.49	2.49	2.49	2.49	4.5	13.5	13.8	1150	3310	3420	15.1	14.4	13.8

		Indoor unit combination	Cooling capacity (kW)									Power consumption (W)			Standard current (A)		
			Room cooling capacity (kW)						Total capacity (kW)								
			A room	B room	C room	D room	E room	F room	Min.	Standard	Max.	Min.	Standard	Max.	220V	230V	240V
Cooling operation	1 room	20	2.0	—	—	—	—	—	1.8	2.0	2.7	650	780	1100	3.6	3.4	3.3
		25	2.5	—	—	—	—	—	1.8	2.5	3.2	650	1000	1350	4.6	4.4	4.2
		35	3.5	—	—	—	—	—	1.8	3.5	3.7	650	1500	1600	6.9	6.6	6.3
		50	5.0	—	—	—	—	—	1.8	5.0	5.8	650	2150	2500	9.9	9.4	9.0
		60	6.0	—	—	—	—	—	1.8	6.0	6.7	650	2720	3000	12.5	11.9	11.4
		71	7.1	—	—	—	—	—	1.8	7.1	7.2	650	3250	3080	14.9	14.3	13.7
	2 room	20 + 20	2.00	2.00	—	—	—	—	3.0	4.0	5.4	740	960	1460	4.4	4.2	4.0
		20 + 25	2.00	2.50	—	—	—	—	3.0	4.5	5.9	740	1100	1820	5.1	4.8	4.6
		20 + 35	2.00	3.50	—	—	—	—	3.0	5.5	6.4	740	1500	2020	6.9	6.6	6.3
		20 + 50	2.00	5.00	—	—	—	—	3.0	7.0	8.5	740	2290	2820	10.5	10.1	9.6
		20 + 60	2.00	6.00	—	—	—	—	3.0	8.0	9.4	740	2660	3360	12.2	11.7	11.2
		20 + 71	2.00	7.10	—	—	—	—	3.0	9.1	9.9	740	3100	3780	14.1	13.5	12.9
		25 + 25	2.50	2.50	—	—	—	—	3.0	5.0	6.8	740	1420	2200	6.5	6.2	6.0
		25 + 35	2.50	3.50	—	—	—	—	3.0	6.0	6.9	740	1810	2320	8.3	7.9	7.6
		25 + 50	2.50	5.00	—	—	—	—	3.0	7.5	9.0	740	2470	3220	11.3	10.8	10.4
		25 + 60	2.50	6.00	—	—	—	—	3.0	8.5	9.4	740	2810	3360	12.9	12.3	11.8
		25 + 71	2.53	7.17	—	—	—	—	3.0	9.7	10.4	740	3350	4020	15.4	14.7	14.1
		35 + 35	3.50	3.50	—	—	—	—	3.0	7.0	7.4	740	2290	2820	10.5	10.1	9.6
		35 + 50	3.50	5.00	—	—	—	—	3.0	8.5	9.5	740	2810	3620	12.9	12.3	11.8
		35 + 60	3.50	6.00	—	—	—	—	3.0	9.5	10.4	740	3280	3990	15.1	14.4	13.8
		35 + 71	3.50	7.10	—	—	—	—	3.0	10.6	10.9	740	3760	4250	17.1	16.3	15.7
		50 + 50	5.00	5.00	—	—	—	—	3.0	10.0	10.8	740	3520	4050	16.2	15.5	14.8
		50 + 60	5.00	6.00	—	—	—	—	3.0	11.0	12.0	740	3870	4410	17.8	17.0	16.3
		50 + 71	4.96	7.04	—	—	—	—	3.0	12.0	12.0	740	4410	4410	20.0	19.2	18.4
		60 + 60	6.00	6.00	—	—	—	—	3.0	12.0	12.0	740	4410	4410	20.2	19.4	18.6
		60 + 71	5.73	6.77	—	—	—	—	3.0	12.5	12.5	740	4710	4710	21.4	20.5	19.6
		71 + 71	6.25	6.25	—	—	—	—	3.0	12.5	12.5	740	4710	4710	21.2	20.3	19.4
	3 room	20 + 20 + 20	2.00	2.00	2.00	—	—	—	3.7	6.0	8.1	880	1530	2560	7.0	6.7	6.4
		20 + 20 + 25	2.00	2.00	2.50	—	—	—	3.7	6.5	8.6	880	1730	2700	7.9	7.6	7.3
		20 + 20 + 35	2.00	2.00	3.50	—	—	—	3.7	7.5	9.1	880	2080	3120	9.6	9.1	8.8
		20 + 20 + 50	2.00	2.00	5.00	—	—	—	3.7	9.0	11.2	880	2730	4120	12.5	12.0	11.5
		20 + 20 + 60	2.00	2.00	6.00	—	—	—	3.7	10.0	12.1	880	3280	4680	15.1	14.4	13.8
		20 + 20 + 71	2.00	2.00	7.10	—	—	—	3.7	11.1	12.6	880	3930	4710	18.0	17.3	16.5
		20 + 25 + 25	2.00	2.50	2.50	—	—	—	3.7	7.0	9.1	880	1940	3210	8.9	8.5	8.2
		20 + 25 + 35	2.00	2.50	3.50	—	—	—	3.7	8.0	9.6	880	2440	3450	11.2	10.7	10.3
		20 + 25 + 50	2.00	2.50	5.00	—	—	—	3.7	9.5	11.7	880	3130	4480	14.4	13.7	13.2
		20 + 25 + 60	2.00	2.50	6.00	—	—	—	3.7	10.5	12.6	880	3770	4800	17.3	16.6	15.9
		20 + 25 + 71	2.00	2.50	7.10	—	—	—	3.7	11.6	12.6	880	4210	4800	19.1	18.3	17.5
		20 + 35 + 35	2.00	3.50	3.50	—	—	—	3.7	9.0	10.1	880	2920	3850	13.4	12.8	12.3
		20 + 35 + 50	2.00	3.50	5.00	—	—	—	3.7	10.5	12.0	880	3770	4450	17.3	16.6	15.9
		20 + 35 + 60	2.00	3.50	6.00	—	—	—	3.7	11.5	12.6	880	4150	4800	19.1	18.2	17.5
		20 + 35 + 71	1.98	3.47	7.04	—	—	—	4.7	12.5	12.6	880	4670	4800	21.2	20.3	19.5
		20 + 50 + 50	2.00	5.00	5.00	—	—	—	3.7	12.0	12.6	880	4440	4800	20.4	19.5	18.7
		20 + 50 + 60	1.92	4.81	5.77	—	—	—	3.7	12.5	12.6	880	4670	4800	21.4	20.5	19.7
		20 + 50 + 71	1.77	4.43	6.29	—	—	—	3.7	12.5	12.6	881	4670	4800	21.4	20.5	19.7
		20 + 60 + 60	1.79	5.36	5.36	—	—	—	3.7	12.5	12.6	881	4670	4800	21.4	20.5	19.7
		20 + 60 + 71	1.66	4.97	5.88	—	—	—	3.7	12.5	12.6	881	4670	4800	21.4	20.5	19.7
		20 + 71 + 71	1.54	5.48	5.48	—	—	—	3.7	12.5	12.6	881	4660	4800	21.4	20.5	19.6
		25 + 25 + 25	2.50	2.50	2.50	—	—	—	3.7	7.5	9.6	880	2130	3640	9.8	9.4	9.0
		25 + 25 + 35	2.50	2.50	3.50	—	—	—	3.7	8.5	10.1	880	2650	3900	12.2	11.6	11.2
		25 + 25 + 50	2.50	2.50	5.00	—	—	—	3.7	10.0	12.6	880	3420	4800	15.7	15.0	14.4
		25 + 25 + 60	2.50	2.50	6.00	—	—	—	3.7	11.0	12.6	880	3910	4800	18.0	17.2	16.5
		25 + 25 + 71	2.58	2.58	7.33	—	—	—	3.7	12.5	12.6	880	4670	4800	21.2	20.3	19.5
		25 + 35 + 35	2.50	3.50	3.50	—	—	—	3.7	9.5	10.4	880	3130	3910	14.4	13.7	13.2
		25 + 35 + 50	2.50	3.50	5.00	—	—	—	3.7	11.0	12.6	880	3910	4800	18.0	17.2	16.5
		25 + 35 + 60	2.50	3.50	6.00	—	—	—	3.7	12.0	12.6	880	4440	4800	20.4	19.5	18.7
		25 + 35 + 71	2.39	3.34	6.77	—	—	—	3.7	12.5	12.6	880	4670	4800	21.4	20.5	19.7
		25 + 50 + 50	2.50	5.00	5.00	—	—	—	3.7	12.5	12.6	880	4670	4800	21.4	20.5	19.7
		25 + 50 + 60	2.31	4.63	5.56	—	—	—	3.7	12.5	12.6	880	4670	4800	21.4	20.5	19.7
		25 + 50 + 71	2.14	4.28	6.08	—	—	—	3.7	12.5	12.6	880	4670	4800	21.4	20.5	19.7
		25 + 60 + 60	2.16	5.17	5.17	—	—	—	3.7	12.5	12.6	880	4670	4800	21.4	20.5	19.7
		25 + 60 + 71	2.00	4.81	5.69	—	—	—	3.7	12.5	12.6	880	4670	4800	21.4	20.5	19.7
		25 + 71 + 71	1.87	5.31	5.31	—	—	—	3.7	12.5	12.6	880	4670	4800	21.4	20.5	19.7
		35 + 35 + 35	3.50	3.50	3.50	—	—	—	3.7	10.5	10.9	880	3770	4180	17.3	16.6	15.9
		35 + 35 + 50	3.50	3.50	5.00	—	—	—	3.7	12.0	12.6	880	4440	4800	20.4	19.5	18.7
		35 + 35 + 60	3.37	3.37	5.77	—	—	—	3.7	12.5	12.6	880	4670	4800	21.4	20.5	19.7
		35 + 35 + 71	3.10	3.10	6.29	—	—	—	3.7	12.5	12.6	880	4660	4800	21.2	20.3	19.4
		35 + 50 + 50	3.24	4.63	4.63	—	—	—	3.7	12.5	12.6	880	4670	4800	21.4	20.5	19.7
		35 + 50 + 60	3.02	4.31	5.17	—	—	—	3.7	12.5	12.6	880	4660	4800	21.4	20.5	19.6
		35 + 50 + 71	2.80	4.01	5.69	—	—	—	3.7	12.5	12.6	880	4660	4800	21.4	20.5	19.6
		35 + 60 + 60	2.82	4.84	4.84	—	—	—	3.7	12.5	12.6	880	4660	4800	21.4	20.5	19.6
		35 + 60 + 71	2.64	4.52	5.35	—	—	—	3.7	12.5	12.6	880	4660	4800	21.4	20.5	19.6
		35 + 71 + 71	2.47	5.01	5.01	—	—	—	3.7	12.5	12.6	880	4650	4800	21.3	20.4	19.6
		50 + 50 + 50	4.17	4.17	4.17	—	—	—	3.7	12.5	12.6	880	4660	4800	21.4	20.5	19.6
		50 + 50 + 60	3.91	3.91	4.69	—	—	—	3.7	12.5	12.6	880	4660	4800	21.4	20.5	19.6
		50 + 50 + 71	3.65	3.65	5.19	—	—	—	3.7	12.5	12.6	880	4650	4800	21.3	20.4	19.6
		50 + 60 + 60	3.68	4.41	4.41	—	—	—	3.7	12.5	12.6	880	4650	4800	21.3	20.4	19.6
		50 + 60 + 71	3.45	4.14	4.90	—	—	—	3.7	12.5	12.6	880	4650	4800	21.3	20.4	19.6
		60 + 60 + 60	4.17	4.17	4.17	—	—	—	3.7	12.5	12.6	880	4650	4800	21.3	20.4	19.6
		60 + 60 + 71	3.93	3.93	4.65	—	—	—	3.7	12.5	12.6	880	4650	4800	21.3	20.4	19.6
	4 room	20 + 20 + 20 + 20	2.00	2.00	2.00	2.00	—	—	4.4	8.0	10.8	1100	2110	3680	9.6	9.2	8.8
		20 + 20 + 20 + 25	2.00	2.00	2.00	2.50	—	—	4.4	8.5	11.3	1100	2390	3890	10.9	10.4	10.0
		20 + 20 + 20 + 35	2.00	2.00	2.00	3.50	—	—	4.4	9.5	11.8	1100	2900	4350	13.2	12.6	12.1
		20 + 20 + 20 + 50	2.00	2.00	2.00	5.00	—	—	4.4	11.0	12.8	1100	3580	4800	16.3	15.6	14.9
		20 + 20 + 20 + 60	2.00	2.00	2.00	6.00	—	—	4.4	12.0	12.8	1100	4100	4800	18.7	17.8	17.1
		20 + 20 + 20 + 71	1.91	1.91	1.91	6.77	—	—	4.4	12.5	12.8	1100	4730	4800	21.3	20.4	19.5
		20 + 20 + 25 + 25	2.00	2.00	2.50	2.50	—	—	4.4	9.0	11.8	1100	2600	4410	11.8	11.3	10.8
		20 + 20 + 25 + 35	2.00	2.00	2.50	3.50	—	—	4.4	10.0	12.3	1100	3210	4780	14.6	14.0	13.4
		20 + 20 + 25 + 50	2.00	2.00	2.50	5.00	—	—	4.4	11.5	12.8	1100	3830	4800	17.4	16.7	16.0
		20 + 20 + 25 + 60	2.00	2.00	2.50	6.00	—	—	4.4	12.5	12.8	1100	4740	4800	21.6	20.6	19.8
		20 + 20 + 25 + 71	1.84	1.84	2.30	6.53	—	—	4.4	12.5	12.8	1100	4730	4800	21.5	20.6	19.7
		20 + 20 + 35 + 35	2.00	2.00	3.50	3.50	—	—	4.4	11.0	12.8	1100	3580	4800	16.3	15.6	14.9
		20 + 20 + 35 + 50	2.00	2.00	3.50	5.00	—	—	4.4	12.5	12.8	1100	4740	4800	21.6	20.6	19.8

Indoor unit combination			Cooling capacity (kW)									Power consumption (W)			Standard current (A)		
			Room cooling capacity (kW)						Total capacity (kW)								
			A room	B room	C room	D room	E room	F room	Min.	Standard	Max.	Min.	Standard	Max.	220V	230V	240V
Cooling operation	4 room	20 + 20 + 35 + 60	1.85	1.85	3.24	5.56	—	—	4.4	12.5	12.8	1100	4730	4800	21.5	20.6	19.7
		20 + 20 + 35 + 71	1.71	1.71	3.00	6.08	—	—	4.4	12.5	12.8	1100	4730	4800	21.5	20.6	19.7
		20 + 20 + 50 + 50	1.79	1.79	4.46	4.46	—	—	4.4	12.5	12.8	1100	4730	4800	21.5	20.6	19.7
		20 + 20 + 50 + 60	1.67	1.67	4.17	5.00	—	—	4.4	12.5	12.8	1100	4730	4800	21.5	20.6	19.7
		20 + 20 + 50 + 71	1.55	1.55	3.88	5.51	—	—	4.4	12.5	12.8	1100	4720	4800	21.5	20.5	19.7
		20 + 20 + 60 + 60	1.56	1.56	4.69	4.69	—	—	4.4	12.5	12.8	1100	4720	4800	21.5	20.5	19.7
		20 + 20 + 60 + 71	1.46	1.46	4.39	5.19	—	—	4.4	12.5	12.8	1100	4720	4800	21.5	20.5	19.7
		20 + 20 + 71 + 71	1.37	1.37	4.88	4.88	—	—	4.4	12.5	12.8	1100	4710	4800	21.4	20.5	19.6
		20 + 25 + 25 + 25	2.00	2.50	2.50	2.50	—	—	4.4	9.5	12.8	1100	2900	4800	13.2	12.6	12.1
		20 + 25 + 25 + 35	2.00	2.50	2.50	3.50	—	—	4.4	10.5	12.8	1100	3440	4800	15.7	15.0	14.3
		20 + 25 + 25 + 50	2.00	2.50	2.50	5.00	—	—	4.4	12.0	12.8	1100	4100	4800	18.7	17.8	17.1
		20 + 25 + 25 + 60	1.92	2.40	2.40	5.77	—	—	4.4	12.5	12.8	1100	4740	4800	21.6	20.6	19.8
		20 + 25 + 25 + 71	1.82	2.26	2.26	6.16	—	—	4.4	12.5	12.8	1100	4730	4800	21.5	20.6	19.7
		20 + 25 + 35 + 35	2.00	2.50	3.50	3.50	—	—	4.4	11.5	12.8	1100	3830	4800	17.4	16.7	16.0
		20 + 25 + 35 + 50	1.92	2.40	3.37	4.81	—	—	4.4	12.5	12.8	1100	4740	4800	21.6	20.6	19.8
		20 + 25 + 35 + 60	1.79	2.23	3.13	5.36	—	—	4.4	12.5	12.8	1100	4730	4800	21.5	20.6	19.7
		20 + 25 + 35 + 71	1.66	2.07	2.90	5.88	—	—	4.4	12.5	12.8	1100	4730	4800	21.5	20.6	19.7
		20 + 25 + 50 + 50	1.72	2.16	4.31	4.31	—	—	4.4	12.5	12.8	1100	4730	4800	21.5	20.6	19.7
		20 + 25 + 50 + 60	1.61	2.02	4.03	4.84	—	—	4.4	12.5	12.8	1100	4720	4800	21.5	20.5	19.7
		20 + 25 + 50 + 71	1.51	1.88	3.77	5.35	—	—	4.4	12.5	12.8	1100	4720	4800	21.5	20.5	19.7
		20 + 25 + 60 + 60	1.52	1.89	4.55	4.55	—	—	4.4	12.5	12.8	1100	4720	4800	21.5	20.5	19.7
		20 + 25 + 60 + 71	1.42	1.78	4.26	5.04	—	—	4.4	12.5	12.8	1100	4720	4800	21.5	20.5	19.7
		20 + 25 + 71 + 71	1.34	1.67	4.75	4.75	—	—	4.4	12.5	12.8	1100	4700	4800	21.4	20.5	19.6
		20 + 35 + 35 + 35	2.00	3.50	3.50	3.50	—	—	4.4	12.5	12.8	1100	4740	4800	21.6	20.6	19.8
		20 + 35 + 35 + 50	1.79	3.13	3.13	4.46	—	—	4.4	12.5	12.8	1100	4730	4800	21.5	20.6	19.7
		20 + 35 + 35 + 60	1.67	2.92	2.92	5.00	—	—	4.4	12.5	12.8	1100	4730	4800	21.5	20.6	19.7
		20 + 35 + 35 + 71	1.55	2.72	2.72	5.51	—	—	4.4	12.5	12.8	1100	4720	4800	21.5	20.5	19.7
		20 + 35 + 50 + 50	1.61	2.82	4.03	4.03	—	—	4.4	12.5	12.8	1100	4720	4800	21.5	20.5	19.7
		20 + 35 + 50 + 60	1.52	2.65	3.79	4.55	—	—	4.4	12.5	12.8	1100	4720	4800	21.5	20.5	19.7
		20 + 35 + 50 + 71	1.42	2.49	3.55	5.04	—	—	4.4	12.5	12.8	1100	4720	4800	21.5	20.5	19.7
		20 + 35 + 60 + 60	1.43	2.50	4.29	4.29	—	—	4.4	12.5	12.8	1100	4710	4800	21.4	20.5	19.6
		20 + 35 + 60 + 71	1.34	2.35	4.03	4.77	—	—	4.4	12.5	12.8	1100	4710	4800	21.4	20.5	19.6
		20 + 50 + 50 + 50	1.47	3.68	3.68	3.68	—	—	4.4	12.5	12.8	1100	4720	4800	21.5	20.5	19.7
		20 + 50 + 50 + 60	1.39	3.47	3.47	4.17	—	—	4.4	12.5	12.8	1100	4710	4800	21.4	20.5	19.6
		20 + 50 + 50 + 71	1.31	3.27	3.27	4.65	—	—	4.4	12.5	12.8	1100	4700	4800	21.4	20.5	19.6
		20 + 50 + 60 + 60	1.32	3.29	3.95	3.95	—	—	4.4	12.5	12.8	1100	4700	4800	21.4	20.5	19.6
		25 + 25 + 25 + 25	2.50	2.50	2.50	2.50	—	—	4.4	10.0	12.8	1100	3210	4800	14.6	14.0	13.4
		25 + 25 + 25 + 35	2.50	2.50	2.50	3.50	—	—	4.4	11.0	12.8	1100	3580	4800	16.3	15.6	14.9
		25 + 25 + 25 + 50	2.50	2.50	2.50	5.00	—	—	4.4	12.5	12.8	1100	4740	4800	21.6	20.6	19.8
		25 + 25 + 25 + 60	2.31	2.31	2.31	5.56	—	—	4.4	12.5	12.8	1100	4730	4800	21.5	20.6	19.7
		25 + 25 + 25 + 71	2.14	2.14	2.14	6.08	—	—	4.4	12.5	12.8	1100	4730	4800	21.5	20.6	19.7
		25 + 25 + 35 + 35	2.50	2.50	3.50	3.50	—	—	4.4	12.0	12.8	1100	4100	4800	18.7	17.8	17.1
		25 + 25 + 35 + 50	2.31	2.31	3.24	4.63	—	—	4.4	12.5	12.8	1100	4730	4800	21.5	20.6	19.7
		25 + 25 + 35 + 60	2.16	2.16	3.02	5.17	—	—	4.4	12.5	12.8	1100	4730	4800	21.5	20.6	19.7
		25 + 25 + 35 + 71	2.00	2.00	2.80	5.69	—	—	4.4	12.5	12.8	1100	4720	4800	21.5	20.5	19.7
		25 + 25 + 50 + 50	2.08	2.08	4.17	4.17	—	—	4.4	12.5	12.8	1100	4730	4800	21.5	20.6	19.7
		25 + 25 + 50 + 60	1.95	1.95	3.91	4.69	—	—	4.4	12.5	12.8	1100	4720	4800	21.5	20.5	19.7
		25 + 25 + 50 + 71	1.83	1.83	3.65	5.19	—	—	4.4	12.5	12.8	1100	4720	4800	21.5	20.5	19.7
		25 + 25 + 60 + 60	1.84	1.84	4.41	4.41	—	—	4.4	12.5	12.8	1100	4720	4800	21.5	20.5	19.7
		25 + 25 + 60 + 71	1.73	1.73	4.14	4.90	—	—	4.4	12.5	12.8	1100	4710	4800	21.4	20.5	19.6
		25 + 25 + 71 + 71	1.63	1.63	4.62	4.62	—	—	4.4	12.5	12.8	1100	4700	4800	21.4	20.5	19.6
		25 + 35 + 35 + 35	2.40	3.37	3.37	3.37	—	—	4.4	12.5	12.8	1100	4740	4800	21.6	20.6	19.8
		25 + 35 + 35 + 50	2.16	3.02	3.02	4.31	—	—	4.4	12.5	12.8	1100	4730	4800	21.5	20.6	19.7
		25 + 35 + 35 + 60	2.02	2.82	2.82	4.84	—	—	4.4	12.5	12.8	1100	4720	4800	21.5	20.5	19.7
		25 + 35 + 35 + 71	1.88	2.64	2.64	5.35	—	—	4.4	12.5	12.8	1100	4720	4800	21.5	20.5	19.7
		25 + 35 + 50 + 50	1.95	2.73	3.91	3.91	—	—	4.4	12.5	12.8	1100	4720	4800	21.5	20.5	19.7
		25 + 35 + 50 + 60	1.84	2.57	3.68	4.41	—	—	4.4	12.5	12.8	1100	4720	4800	21.5	20.5	19.7
		25 + 35 + 50 + 71	1.73	2.42	3.45	4.90	—	—	4.4	12.5	12.8	1100	4710	4800	21.4	20.5	19.6
		25 + 35 + 60 + 60	1.74	2.43	4.17	4.17	—	—	4.4	12.5	12.8	1100	4710	4800	21.4	20.5	19.6
		25 + 35 + 60 + 71	1.64	2.29	3.93	4.65	—	—	4.4	12.5	12.8	1100	4700	4800	21.4	20.5	19.6
		25 + 50 + 50 + 50	1.79	3.57	3.57	3.57	—	—	4.4	12.5	12.8	1100	4710	4800	21.4	20.5	19.6
		25 + 50 + 50 + 60	1.69	3.38	3.38	4.05	—	—	4.4	12.5	12.8	1100	4710	4800	21.4	20.5	19.6
		25 + 50 + 60 + 60	1.60	3.21	3.85	3.85	—	—	4.4	12.5	12.8	1100	4700	4800	21.4	20.5	19.6
		35 + 35 + 35 + 35	3.13	3.13	3.13	3.13	—	—	4.4	12.5	12.8	1100	4730	4800	21.5	20.6	19.7
		35 + 35 + 35 + 50	2.82	2.82	2.82	4.03	—	—	4.4	12.5	12.8	1100	4720	4800	21.5	20.5	19.7
		35 + 35 + 35 + 60	2.65	2.65	2.65	4.55	—	—	4.4	12.5	12.8	1100	4720	4800	21.5	20.5	19.7
		35 + 35 + 35 + 71	2.49	2.49	2.49	5.04	—	—	4.4	12.5	12.8	1100	4710	4800	21.4	20.5	19.6
		35 + 35 + 50 + 50	2.57	2.57	3.68	3.68	—	—	4.4	12.5	12.8	1100	4720	4800	21.5	20.5	19.7
		35 + 35 + 50 + 60	2.43	2.43	3.47	4.17	—	—	4.4	12.5	12.8	1100	4710	4800	21.4	20.5	19.6
		35 + 35 + 50 + 71	2.29	2.29	3.27	4.65	—	—	4.4	12.5	12.8	1100	4700	4800	21.4	20.5	19.6
		35 + 35 + 60 + 60	2.30	2.30	3.95	3.95	—	—	4.4	12.5	12.8	1100	4700	4800	21.4	20.5	19.6
		35 + 50 + 50 + 50	2.36	3.38	3.38	3.38	—	—	4.4	12.5	12.8	1100	4710	4800	21.4	20.5	19.6
		35 + 50 + 50 + 60	2.24	3.21	3.21	3.85	—	—	4.4	12.5	12.8	1100	4700	4800	21.4	20.5	19.6
	5 room	20 + 20 + 20 + 20 + 20	2.00	2.00	2.00	2.00	2.00	—	5.1	10.0	13.3	1210	2950	4800	13.4	12.8	12.3
		20 + 20 + 20 + 20 + 25	2.00	2.00	2.00	2.00	2.50	—	5.1	10.5	13.3	1210	3200	4800	14.6	13.9	13.3
		20 + 20 + 20 + 20 + 35	2.00	2.00	2.00	2.00	3.50	—	5.1	11.5	13.3	1210	3710	4800	16.9	16.1	15.5
		20 + 20 + 20 + 20 + 50	1.92	1.92	1.92	1.92	4.81	—	5.1	12.5	13.3	1210	4430	4800	20.2	19.3	18.5
		20 + 20 + 20 + 20 + 60	1.79	1.79	1.79	1.79	5.36	—	5.1	12.5	13.3	1210	4420	4800	20.1	19.2	18.4
		20 + 20 + 20 + 20 + 71	1.66	1.66	1.66	1.66	5.88	—	5.1	12.5	13.3	1210	4410	4800	20.1	19.2	18.4
		20 + 20 + 20 + 25 + 25	2.00	2.00	2.00	2.50	2.50	—	5.1	11.0	13.3	1210	3400	4800	15.5	14.8	14.2
		20 + 20 + 20 + 25 + 35	2.00	2.00	2.00	2.50	3.50	—	5.1	12.0	13.3	1210	4090	4800	18.6	17.8	17.1
		20 + 20 + 20 + 25 + 50	1.85	1.85	1.85	2.31	4.63	—	5.1	12.5	13.3	1210	4430	4800	20.2	19.3	18.5
		20 + 20 + 20 + 25 + 60	1.72	1.72	1.72	2.16	5.17	—	5.1	12.5	13.3	1210	4420	4800	20.1	19.2	18.4
		20 + 20 + 20 + 25 + 71	1.60	1.60	1.60	2.00	5.69	—	5.1	12.5	13.3	1210	4410	4800	20.1	19.2	18.4
		20 + 20 + 20 + 35 + 35	1.92	1.92	1.92	3.37	3.37	—	5.1	12.5	13.3	1210	4430	4800	20.2	19.3	18.5
		20 + 20 + 20 + 35 + 50	1.72	1.72	1.72	3.02	4.31	—	5.1	12.5	13.3	1210	4420	4800	20.1	19.2	18.4
		20 + 20 + 20 + 35 + 60	1.61	1.61	1.61	2.82	4.84	—	5.1	12.5	13.3	1210	4410	4800	20.1	19.2	18.4
		20 + 20 + 20 + 35 + 71	1.51	1.51	1.51	2.64	5.35	—	5.1	12.5	13.3	1210	4400	4800	20.0	19.1	18.4
		20 + 20 + 20 + 50 + 50	1.56	1.56	1.56	3.91	3.91	—	5.1	12.5	13.3	1210	4410	4800	20.1	19.2	18.4
		20 + 20 + 20 + 50 + 60	1.47	1.47	1.47	3.68	4.41	—	5.1	12.5	13.3	1210	4400	4800	20.0	19.1	18.4
		20 + 20 + 20 + 50 + 71	1.38	1.38	1.38	3.45	4.90	—	5.1	12.5	13.3	1210	4390	4800	20.0	19.1	18.3
		20 + 20 + 20 + 60 + 60	1.39	1.39	1.39	4.17	4.17	—	5.1	12.5	13.3	1210	4390	4800	20.0	19.1	18.3
		20 + 20 + 20 + 60 + 71	1.31	1.31	1.31	3.93	4.65	—	5.1	12.5	13.3	1210	4380	4800	19.9	19.1	18.3

Indoor unit combination			Cooling capacity (kW)									Power consumption (W)			Standard current (A)		
			Room cooling capacity (kW)						Total capacity (kW)								
			A room	B room	C room	D room	E room	F room	Min.	Standard	Max.	Min.	Standard	Max.	220V	230V	240V
Cooling operation	5 room	20 + 20 + 25 + 25 + 25	2.00	2.00	2.50	2.50	2.50	—	5.1	11.5	13.3	1210	3710	4800	16.9	16.1	15.5
		20 + 20 + 25 + 25 + 35	2.00	2.00	2.50	2.50	3.50	—	5.1	12.5	13.3	1210	4440	4800	20.2	19.3	18.5
		20 + 20 + 25 + 25 + 50	1.79	1.79	2.23	2.23	4.46	—	5.1	12.5	13.3	1210	4420	4800	20.1	19.2	18.4
		20 + 20 + 25 + 25 + 60	1.67	1.67	2.08	2.08	5.00	—	5.1	12.5	13.3	1210	4410	4800	20.1	19.2	18.4
		20 + 20 + 25 + 25 + 71	1.55	1.55	1.94	1.94	5.51	—	5.1	12.5	13.3	1210	4410	4800	20.1	19.2	18.4
		20 + 20 + 25 + 35 + 35	1.85	1.85	2.31	3.24	3.24	—	5.1	12.5	13.3	1210	4430	4800	20.2	19.3	18.5
		20 + 20 + 25 + 35 + 50	1.67	1.67	2.08	2.92	4.17	—	5.1	12.5	13.3	1210	4410	4800	20.1	19.2	18.4
		20 + 20 + 25 + 35 + 60	1.56	1.56	1.95	2.73	4.69	—	5.1	12.5	13.3	1210	4410	4800	20.1	19.2	18.4
		20 + 20 + 25 + 35 + 71	1.46	1.46	1.83	2.56	5.19	—	5.1	12.5	13.3	1210	4400	4800	20.0	19.1	18.4
		20 + 20 + 25 + 50 + 50	1.52	1.52	1.89	3.79	3.79	—	5.1	12.5	13.3	1210	4400	4800	20.0	19.1	18.4
		20 + 20 + 25 + 50 + 60	1.43	1.43	1.79	3.57	4.29	—	5.1	12.5	13.3	1210	4390	4800	20.0	19.1	18.3
		20 + 20 + 25 + 50 + 71	1.34	1.34	1.68	3.36	4.77	—	5.1	12.5	13.3	1210	4390	4800	20.0	19.1	18.3
		20 + 20 + 25 + 60 + 60	1.35	1.35	1.69	4.05	4.05	—	5.1	12.5	13.3	1210	4390	4800	20.0	19.1	18.3
		20 + 20 + 35 + 35 + 35	1.72	1.72	3.02	3.02	3.02	—	5.1	12.5	13.3	1210	4420	4800	20.1	19.2	18.4
		20 + 20 + 35 + 35 + 50	1.56	1.56	2.73	2.73	3.91	—	5.1	12.5	13.3	1210	4410	4800	20.1	19.2	18.4
		20 + 20 + 35 + 35 + 60	1.47	1.47	2.57	2.57	4.41	—	5.1	12.5	13.3	1210	4400	4800	20.0	19.1	18.4
		20 + 20 + 35 + 35 + 71	1.38	1.38	2.42	2.42	4.90	—	5.1	12.5	13.3	1210	4390	4800	20.0	19.1	18.3
		20 + 20 + 35 + 50 + 50	1.43	1.43	2.50	3.57	3.57	—	5.1	12.5	13.3	1210	4390	4800	20.0	19.1	18.3
		20 + 20 + 35 + 50 + 60	1.35	1.35	2.36	3.38	4.05	—	5.1	12.5	13.3	1210	4390	4800	20.0	19.1	18.3
		20 + 20 + 35 + 60 + 60	1.28	1.28	2.24	3.85	3.85	—	5.1	12.5	13.3	1210	4380	4800	19.9	19.1	18.3
		20 + 20 + 50 + 50 + 50	1.32	1.32	3.29	3.29	3.29	—	5.1	12.5	13.3	1210	4380	4800	19.9	19.1	18.3
		20 + 25 + 25 + 25 + 25	2.00	2.50	2.50	2.50	2.50	—	5.1	12.0	13.3	1210	4090	4800	18.6	17.8	17.1
		20 + 25 + 25 + 25 + 35	1.92	2.40	2.40	2.40	3.37	—	5.1	12.5	13.3	1210	4430	4800	20.2	19.3	18.5
		20 + 25 + 25 + 25 + 50	1.72	2.16	2.16	2.16	4.31	—	5.1	12.5	13.3	1210	4420	4800	20.1	19.2	18.4
		20 + 25 + 25 + 25 + 60	1.61	2.02	2.02	2.02	4.84	—	5.1	12.5	13.3	1210	4410	4800	20.1	19.2	18.4
		20 + 25 + 25 + 25 + 71	1.51	1.88	1.88	1.88	5.35	—	5.1	12.5	13.3	1210	4400	4800	20.0	19.1	18.4
		20 + 25 + 25 + 35 + 35	1.79	2.23	2.23	3.13	3.13	—	5.1	12.5	13.3	1210	4420	4800	20.1	19.2	18.4
		20 + 25 + 25 + 35 + 50	1.61	2.02	2.02	2.82	4.03	—	5.1	12.5	13.3	1210	4410	4800	20.1	19.2	18.4
		20 + 25 + 25 + 35 + 60	1.52	1.89	1.89	2.65	4.55	—	5.1	12.5	13.3	1210	4400	4800	20.0	19.1	18.4
		20 + 25 + 25 + 35 + 71	1.42	1.78	1.78	2.49	5.04	—	5.1	12.5	13.3	1210	4390	4800	20.0	19.1	18.3
		20 + 25 + 25 + 50 + 50	1.47	1.84	1.84	3.68	3.68	—	5.1	12.5	13.3	1210	4400	4800	20.0	19.1	18.4
		20 + 25 + 25 + 50 + 60	1.39	1.74	1.74	3.47	4.17	—	5.1	12.5	13.3	1210	4390	4800	20.0	19.1	18.3
		20 + 25 + 25 + 50 + 71	1.31	1.64	1.64	3.27	4.65	—	5.1	12.5	13.3	1210	4380	4800	19.9	19.1	18.3
		20 + 25 + 25 + 60 + 60	1.32	1.64	1.64	3.95	3.95	—	5.1	12.5	13.3	1210	4380	4800	19.9	19.1	18.3
		20 + 25 + 35 + 35 + 35	1.67	2.08	2.92	2.92	2.92	—	5.1	12.5	13.3	1210	4410	4800	20.1	19.2	18.4
		20 + 25 + 35 + 35 + 50	1.52	1.89	2.65	2.65	3.79	—	5.1	12.5	13.3	1210	4400	4800	20.0	19.1	18.4
		20 + 25 + 35 + 35 + 60	1.43	1.79	2.50	2.50	4.29	—	5.1	12.5	13.3	1210	4390	4800	20.0	19.1	18.3
		20 + 25 + 35 + 35 + 71	1.34	1.68	2.35	2.35	4.77	—	5.1	12.5	13.3	1210	4390	4800	20.0	19.1	18.3
		20 + 25 + 35 + 50 + 50	1.39	1.74	2.43	3.47	3.47	—	5.1	12.5	13.3	1210	4390	4800	20.0	19.1	18.3
		20 + 25 + 35 + 50 + 60	1.32	1.64	2.30	3.29	3.95	—	5.1	12.5	13.3	1210	4380	4800	19.9	19.1	18.3
		20 + 25 + 50 + 50 + 50	1.28	1.60	3.21	3.21	3.21	—	5.1	12.5	13.3	1210	4380	4800	19.9	19.1	18.3
		20 + 35 + 35 + 35 + 35	1.56	2.73	2.73	2.73	2.73	—	5.1	12.5	13.3	1210	4410	4800	20.1	19.2	18.4
		20 + 35 + 35 + 35 + 50	1.43	2.50	2.50	2.50	3.57	—	5.1	12.5	13.3	1210	4390	4800	20.0	19.1	18.3
		20 + 35 + 35 + 35 + 60	1.35	2.36	2.36	2.36	4.05	—	5.1	12.5	13.3	1210	4390	4800	20.0	19.1	18.3
		20 + 35 + 35 + 50 + 50	1.32	2.30	2.30	3.29	3.29	—	5.1	12.5	13.3	1210	4380	4800	19.9	19.1	18.3
		25 + 25 + 25 + 25 + 25	2.50	2.50	2.50	2.50	2.50	—	5.1	12.5	13.3	1210	4440	4800	20.2	19.3	18.5
		25 + 25 + 25 + 25 + 35	2.31	2.31	2.31	2.31	3.24	—	5.1	12.5	13.3	1210	4430	4800	20.2	19.3	18.5
		25 + 25 + 25 + 25 + 50	2.08	2.08	2.08	2.08	4.17	—	5.1	12.5	13.3	1210	4410	4800	20.1	19.2	18.4
		25 + 25 + 25 + 25 + 60	1.95	1.95	1.95	1.95	4.69	—	5.1	12.5	13.3	1210	4410	4800	20.1	19.2	18.4
		25 + 25 + 25 + 35 + 35	2.16	2.16	2.16	3.02	3.02	—	5.1	12.5	13.3	1210	4420	4800	20.1	19.2	18.4
		25 + 25 + 25 + 35 + 50	1.95	1.95	1.95	2.73	3.91	—	5.1	12.5	13.3	1210	4410	4800	20.1	19.2	18.4
		25 + 25 + 25 + 35 + 60	1.84	1.84	1.84	2.57	4.41	—	5.1	12.5	13.3	1210	4400	4800	20.0	19.1	18.4
		25 + 25 + 25 + 35 + 71	1.73	1.73	1.73	2.42	4.90	—	5.1	12.5	13.3	1210	4390	4800	20.0	19.1	18.3
		25 + 25 + 25 + 50 + 50	1.79	1.79	1.79	3.57	3.57	—	5.1	12.5	13.3	1210	4390	4800	20.0	19.1	18.3
		25 + 25 + 25 + 50 + 60	1.69	1.69	1.69	3.38	4.05	—	5.1	12.5	13.3	1210	4390	4800	20.0	19.1	18.3
		25 + 25 + 25 + 60 + 60	1.60	1.60	1.60	3.85	3.85	—	5.1	12.5	13.3	1210	4380	4800	19.9	19.1	18.3
		25 + 25 + 35 + 35 + 35	2.02	2.02	2.82	2.82	2.82	—	5.1	12.5	13.3	1210	4410	4800	20.1	19.2	18.4
		25 + 25 + 35 + 35 + 50	1.84	1.84	2.57	2.57	3.68	—	5.1	12.5	13.3	1210	4400	4800	20.0	19.1	18.4
		25 + 25 + 35 + 35 + 60	1.74	1.74	2.43	2.43	4.17	—	5.1	12.5	13.3	1210	4390	4800	20.0	19.1	18.3
		25 + 25 + 35 + 35 + 71	1.64	1.64	2.29	2.29	4.65	—	5.1	12.5	13.3	1210	4380	4800	19.9	19.1	18.3
		25 + 25 + 35 + 50 + 50	1.69	1.69	2.36	3.38	3.38	—	5.1	12.5	13.3	1210	4390	4800	20.0	19.1	18.3
		25 + 25 + 35 + 50 + 60	1.60	1.60	2.24	3.21	3.85	—	5.1	12.5	13.3	1210	4380	4800	19.9	19.1	18.3
		25 + 35 + 35 + 35 + 35	1.89	2.65	2.65	2.65	2.65	—	5.1	12.5	13.3	1210	4400	4800	20.0	19.1	18.4
		25 + 35 + 35 + 35 + 50	1.74	2.43	2.43	2.43	3.47	—	5.1	12.5	13.3	1210	4390	4800	20.0	19.1	18.3
		25 + 35 + 35 + 35 + 60	1.64	2.30	2.30	2.30	3.95	—	5.1	12.5	13.3	1210	4380	4800	19.9	19.1	18.3
		25 + 35 + 35 + 50 + 50	1.60	2.24	2.24	3.21	3.21	—	5.1	12.5	13.3	1210	4380	4800	19.9	19.1	18.3
		35 + 35 + 35 + 35 + 35	2.50	2.50	2.50	2.50	2.50	—	5.1	12.5	13.3	1210	4390	4800	20.0	19.1	18.3
		35 + 35 + 35 + 35 + 50	2.30	2.30	2.30	2.30	3.29	—	5.1	12.5	13.3	1210	4380	4800	19.9	19.1	18.3
	6 room	20 + 20 + 20 + 20 + 20 + 20	2.00	2.00	2.00	2.00	2.00	2.00	5.5	12.0	13.6	1280	3750	4620	17.1	16.3	15.6
		20 + 20 + 20 + 20 + 20 + 25	2.00	2.00	2.00	2.00	2.00	2.50	5.5	12.5	13.3	1280	4010	4800	18.2	17.5	16.7
		20 + 20 + 20 + 20 + 20 + 35	1.85	1.85	1.85	1.85	1.85	3.24	5.5	12.5	13.3	1280	4000	4800	18.2	17.4	16.7
		20 + 20 + 20 + 20 + 20 + 50	1.67	1.67	1.67	1.67	1.67	4.17	5.5	12.5	13.3	1280	3990	4800	18.2	17.4	16.6
		20 + 20 + 20 + 20 + 20 + 60	1.56	1.56	1.56	1.56	1.56	4.69	5.5	12.5	13.3	1280	3990	4800	18.2	17.4	16.6
		20 + 20 + 20 + 20 + 20 + 71	1.46	1.46	1.46	1.46	1.46	5.19	5.5	12.5	13.8	1280	3980	4800	18.1	17.3	16.6
		20 + 20 + 20 + 20 + 25 + 25	1.92	1.92	1.92	1.92	2.40	2.40	5.5	12.5	13.8	1280	4000	4800	18.2	17.4	16.7
		20 + 20 + 20 + 20 + 25 + 35	1.79	1.79	1.79	1.79	2.23	3.13	5.5	12.5	13.8	1280	4000	4800	18.2	17.4	16.7
		20 + 20 + 20 + 20 + 25 + 50	1.61	1.61	1.61	1.61	2.02	4.03	5.5	12.5	13.8	1280	3990	4800	18.2	17.4	16.6
		20 + 20 + 20 + 20 + 25 + 60	1.52	1.52	1.52	1.52	1.89	4.55	5.5	12.5	13.8	1280	3990	4800	18.2	17.4	16.6
		20 + 20 + 20 + 20 + 35 + 35	1.67	1.67	1.67	1.67	2.92	2.92	5.5	12.5	13.8	1280	3990	4800	18.2	17.4	16.6
		20 + 20 + 20 + 20 + 35 + 50	1.52	1.52	1.52	1.52	2.65	3.79	5.5	12.5	13.8	1280	3990	4800	18.2	17.4	16.6
		20 + 20 + 20 + 20 + 35 + 60	1.43	1.43	1.43	1.43	2.50	4.29	5.5	12.5	13.8	1280	3980	4800	18.1	17.3	16.6
		20 + 20 + 20 + 20 + 35 + 71	1.34	1.34	1.34	1.34	2.35	4.77	5.5	12.5	13.8	1280	3980	4800	18.1	17.3	16.6
		20 + 20 + 20 + 20 + 50 + 50	1.39	1.39	1.39	1.39	3.47	3.47	5.5	12.5	13.8	1280	3980	4800	18.1	17.3	16.6
		20 + 20 + 20 + 20 + 50 + 60	1.32	1.32	1.32	1.32	3.29	3.95	5.5	12.5	13.8	1280	3970	4800	18.1	17.3	16.6
		20 + 20 + 20 + 25 + 25 + 25	1.85	1.85	1.85	2.31	2.31	2.31	5.5	12.5	13.8	1280	4000	4800	18.2	17.4	16.7
		20 + 20 + 20 + 25 + 25 + 35	1.72	1.72	1.72	2.16	2.16	3.02	5.5	12.5	13.8	1280	4000	4800	18.2	17.4	16.7
		20 + 20 + 20 + 25 + 25 + 50	1.56	1.56	1.56	1.95	1.95	3.91	5.5	12.5	13.8	1280	3990	4800	18.2	17.4	16.6
		20 + 20 + 20 + 25 + 25 + 60	1.47	1.47	1.47	1.84	1.84	4.41	5.5	12.5	13.8	1280	3980	4800	18.1	17.3	16.6
		20 + 20 + 20 + 25 + 25 + 71	1.38	1.38	1.38	1.73	1.73	4.90	5.5	12.5	13.8	1280	3980	4800	18.1	17.3	16.6
		20 + 20 + 20 + 25 + 35 + 35	1.61	1.61	1.61	2.02	2.82	2.82	5.5	12.5	13.8	1280	3990	4800	18.2	17.4	16.6
		20 + 20 + 20 + 25 + 35 + 50	1.47	1.47	1.47	1.84	2.57	3.68	5.5	12.5	13.8	1280	3980	4800	18.1	17.3	16.6
		20 + 20 + 20 + 25 + 35 + 60	1.39	1.39	1.39	1.74	2.43	4.17	5.5	12.5	13.8	1280	3980	4800	18.1	17.3	16.6
		20 + 20 + 20 + 25 + 35 + 71	1.31	1.31	1.31	1.64	2.29	4.65	5.5	12.5	13.8	1280	3970	4800	18.1	17.3	16.6

Indoor unit combination			Cooling capacity (kW)									Power consumption (W)			Standard current (A)		
			Room cooling capacity (kW)						Total capacity (kW)								
			A room	B room	C room	D room	E room	F room	Min.	Standard	Max.	Min.	Standard	Max.	220V	230V	240V
Cooling operation	6 room	20 + 20 + 20 + 25 + 50 + 50	1.35	1.35	1.35	1.69	3.38	3.38	5.5	12.5	13.8	1280	3980	4800	18.1	17.3	16.6
		20 + 20 + 20 + 25 + 50 + 60	1.28	1.28	1.28	1.60	3.21	3.85	5.5	12.5	13.8	1280	3970	4800	18.1	17.3	16.6
		20 + 20 + 20 + 35 + 35 + 35	1.52	1.52	1.52	2.65	2.65	2.65	5.5	12.5	13.8	1280	3990	4800	18.2	17.4	16.6
		20 + 20 + 20 + 35 + 35 + 50	1.39	1.39	1.39	2.43	2.43	3.47	5.5	12.5	13.8	1280	3980	4800	18.1	17.3	16.6
		20 + 20 + 20 + 35 + 35 + 60	1.32	1.32	1.32	2.30	2.30	3.95	5.5	12.5	13.8	1280	3970	4800	18.1	17.3	16.6
		20 + 20 + 20 + 35 + 50 + 50	1.28	1.28	1.28	2.24	3.21	3.21	5.5	12.5	13.8	1280	3970	4800	18.1	17.3	16.6
		20 + 20 + 25 + 25 + 25 + 25	1.79	1.79	2.23	2.23	2.23	2.23	5.5	12.5	13.8	1280	4000	4800	18.2	17.4	16.7
		20 + 20 + 25 + 25 + 25 + 35	1.67	1.67	2.08	2.08	2.08	2.92	5.5	12.5	13.8	1280	3990	4800	18.2	17.4	16.6
		20 + 20 + 25 + 25 + 25 + 50	1.52	1.52	1.89	1.89	1.89	3.79	5.5	12.5	13.8	1280	3990	4800	18.2	17.4	16.6
		20 + 20 + 25 + 25 + 25 + 60	1.43	1.43	1.79	1.79	1.79	4.29	5.5	12.5	13.8	1280	3980	4800	18.1	17.3	16.6
		20 + 20 + 25 + 25 + 25 + 71	1.34	1.34	1.68	1.68	1.68	4.77	5.5	12.5	13.8	1280	3980	4800	18.1	17.3	16.6
		20 + 20 + 25 + 25 + 35 + 35	1.56	1.56	1.95	1.95	2.73	2.73	5.5	12.5	13.8	1280	3990	4800	18.2	17.4	16.6
		20 + 20 + 25 + 25 + 35 + 50	1.43	1.43	1.79	1.79	2.50	3.57	5.5	12.5	13.8	1280	3980	4800	18.1	17.3	16.6
		20 + 20 + 25 + 25 + 35 + 60	1.35	1.35	1.69	1.69	2.36	4.05	5.5	12.5	13.8	1280	3980	4800	18.1	17.3	16.6
		20 + 20 + 25 + 25 + 50 + 50	1.32	1.32	1.64	1.64	3.29	3.29	5.5	12.5	13.8	1280	3970	4800	18.1	17.3	16.6
		20 + 20 + 25 + 35 + 35 + 35	1.47	1.47	1.84	2.57	2.57	2.57	5.5	12.5	13.8	1280	3980	4800	18.1	17.3	16.6
		20 + 20 + 25 + 35 + 35 + 50	1.35	1.35	1.69	2.36	2.36	3.38	5.5	12.5	13.8	1280	3980	4800	18.1	17.3	16.6
		20 + 20 + 25 + 35 + 35 + 60	1.28	1.28	1.60	2.24	2.24	3.85	5.5	12.5	13.8	1280	3970	4800	18.1	17.3	16.6
		20 + 20 + 35 + 35 + 35 + 35	1.39	1.39	2.43	2.43	2.43	2.43	5.5	12.5	13.8	1280	3980	4800	18.1	17.3	16.6
		20 + 20 + 35 + 35 + 35 + 50	1.28	1.28	2.24	2.24	2.24	3.21	5.5	12.5	13.8	1280	3970	4800	18.1	17.3	16.6
		20 + 25 + 25 + 25 + 25 + 25	1.72	2.16	2.16	2.16	2.16	2.16	5.5	12.5	13.8	1280	4000	4800	18.2	17.4	16.7
		20 + 25 + 25 + 25 + 25 + 35	1.61	2.02	2.02	2.02	2.02	2.82	5.5	12.5	13.8	1280	3990	4800	18.2	17.4	16.6
		20 + 25 + 25 + 25 + 25 + 50	1.47	1.84	1.84	1.84	1.84	3.68	5.5	12.5	13.8	1280	3980	4800	18.1	17.3	16.6
		20 + 25 + 25 + 25 + 25 + 60	1.39	1.74	1.74	1.74	1.74	4.17	5.5	12.5	13.8	1280	3980	4800	18.1	17.3	16.6
		20 + 25 + 25 + 25 + 25 + 71	1.31	1.64	1.64	1.64	1.64	4.65	5.5	12.5	13.8	1280	3970	4800	18.1	17.3	16.6
		20 + 25 + 25 + 25 + 35 + 35	1.52	1.89	1.89	1.89	2.65	2.65	5.5	12.5	13.8	1280	3990	4800	18.2	17.4	16.6
		20 + 25 + 25 + 25 + 35 + 50	1.39	1.74	1.74	1.74	2.43	3.47	5.5	12.5	13.8	1280	3980	4800	18.1	17.3	16.6
		20 + 25 + 25 + 25 + 35 + 60	1.32	1.64	1.64	1.64	2.30	3.95	5.5	12.5	13.8	1280	3970	4800	18.1	17.3	16.6
		20 + 25 + 25 + 25 + 50 + 50	1.28	1.60	1.60	1.60	3.21	3.21	5.5	12.5	13.8	1280	3970	4800	18.1	17.3	16.6
		20 + 25 + 25 + 35 + 35 + 35	1.43	1.79	1.79	2.50	2.50	2.50	5.5	12.5	13.8	1280	3980	4800	18.1	17.3	16.6
		20 + 25 + 25 + 35 + 35 + 50	1.32	1.64	1.64	2.30	2.30	3.29	5.5	12.5	13.8	1280	3970	4800	18.1	17.3	16.6
		20 + 25 + 35 + 35 + 35 + 35	1.35	1.69	2.36	2.36	2.36	2.36	5.5	12.5	13.8	1280	3980	4800	18.1	17.3	16.6
		20 + 35 + 35 + 35 + 35 + 35	1.28	2.24	2.24	2.24	2.24	2.24	5.5	12.5	13.8	1280	3970	4800	18.1	17.3	16.6
		25 + 25 + 25 + 25 + 25 + 25	2.08	2.08	2.08	2.08	2.08	2.08	5.5	12.5	13.8	1280	3990	4800	18.2	17.4	16.6
		25 + 25 + 25 + 25 + 25 + 35	1.95	1.95	1.95	1.95	1.95	2.73	5.5	12.5	13.8	1280	3990	4800	18.2	17.4	16.6
		25 + 25 + 25 + 25 + 25 + 50	1.79	1.79	1.79	1.79	1.79	3.57	5.5	12.5	13.8	1280	3980	4800	18.1	17.3	16.6
		25 + 25 + 25 + 25 + 25 + 60	1.69	1.69	1.69	1.69	1.69	4.05	5.5	12.5	13.8	1280	3980	4800	18.1	17.3	16.6
		25 + 25 + 25 + 25 + 35 + 35	1.84	1.84	1.84	1.84	2.57	2.57	5.5	12.5	13.8	1280	3980	4800	18.1	17.3	16.6
		25 + 25 + 25 + 25 + 35 + 50	1.69	1.69	1.69	1.69	2.36	3.38	5.5	12.5	13.8	1280	3980	4800	18.1	17.3	16.6
		25 + 25 + 25 + 25 + 35 + 60	1.60	1.60	1.60	1.60	2.24	3.85	5.5	12.5	13.8	1280	3970	4800	18.1	17.3	16.6
		25 + 25 + 25 + 35 + 35 + 35	1.74	1.74	1.74	2.43	2.43	2.43	5.5	12.5	13.8	1280	3980	4800	18.1	17.3	16.6
		25 + 25 + 25 + 35 + 35 + 50	1.60	1.60	1.60	2.24	2.24	3.21	5.5	12.5	13.8	1280	3970	4800	18.1	17.3	16.6
		25 + 25 + 35 + 35 + 35 + 35	1.64	1.64	2.30	2.30	2.30	2.30	5.5	12.5	13.8	1280	3970	4800	18.1	17.3	16.6

Control option

Wired remote control can be connected

Model	Interface	Remote Control
SRK63/71HE-S1	not required	RC-E1R
SRK20~60ZMX-S SRK63/71/80ZR-S SRK20~50ZM-S SRF25/35/50ZMX-S SRR25/35/50/60ZM-S	SC-BIKN-E	RC-EX1A RC-E5
FDTC25~60VF ※ FDUM50VF FDE50VG	not required	

※If wireless remote control is required, use RCN-TC-24W-ER

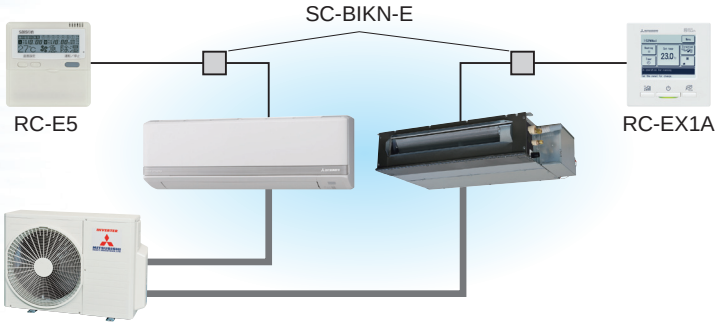

Can be connected to SUPERLINK-Ⅱ

Model	Interface	Remote Control
SRK20~60ZMX-S SRK63/71/80ZR-S SRK20~50ZM-S SRF25/35/50ZMX-S SRR25/35/50/60ZM-S	SC-BIKN-E SC-ADNA-E	RC-EX1A RC-E5
FDTC25~60VF FDUM50VF FDE50VG	SC-ADNA-E	

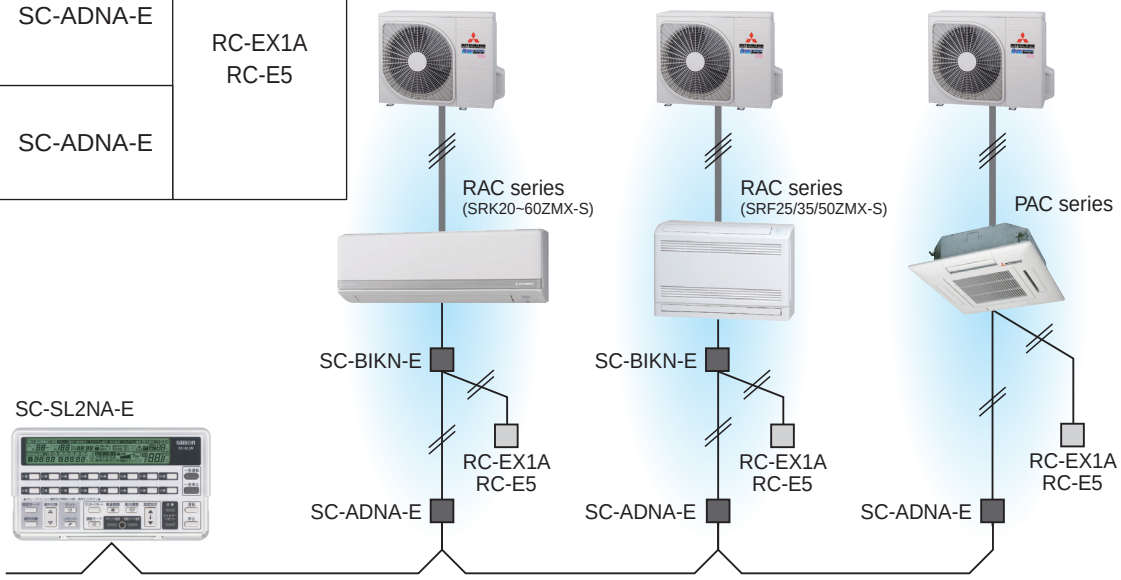

External switch connection CnT

All indoor units are equipped with an additional connection point - CnT - to connect indoor units to an external ON/OFF switch; e.g. time clock, fire alarm, etc.

Model	Interface
SRK63/71HE-S1 FDTC25~60VF FDUM50VF FDE50VG	not required
SRK20~60ZMX-S SRK63/71/80ZR-S SRK20~50ZM-S SRF25/35/50ZMX-S SRR25/35/50/60ZM-S	SC-BIKN-E

Remote surveillance system

Card key on-off

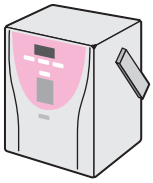

Humidifier linkage

For EU/EEA area only

Based on European regulations listed below, please refer the following specification table.

No.626/2011 of 4 May 2011: energy labeling of air-conditioners (below cooling capacity 12kW)
No.206/2012 of 6 March 2012: requirement for air-conditioners and comfort fans

Indoor unit		SRK20ZMX-S	SRK25ZMX-S	SRK35ZMX-S	SRK50ZMX-S	SRK60ZMX-S	SRK63ZR-S	SRK71ZR-S	SRK80ZR-S
Outdoor unit		SRC20ZMX-S	SRC25ZMX-S	SRC35ZMX-S	SRC50ZMX-S	SRC60ZMX-S	SRC63ZR-S	SRC71ZR-S	SRC80ZR-S
Energy class (cooling/heating)		A++/A+	A++/A+	A++/A+	A++/A++	A+/A+	A++/A++	A++/A+	A++/A+
SEER		7.40	7.60	7.20	6.70	6.00	7.60	7.20	6.60
SCOP (Average climate)		4.13	4.26	4.27	4.60	4.36	4.70	4.50	4.40
Pdesignc	kW	2.00	2.55	3.50	5.00	6.10	6.30	7.10	8.00
Pdesignh (@-10°C)	kW	2.70	2.90	3.30	5.30	6.10	5.40	6.60	7.10
Annual electricity consumption (cooling/heating)	kWh/a	95/915	118/954	171/1082	262/1614	356/1960	291/1610	346/2055	425/2261
Refrigerant (GWP)		R410A (1975)							
Designated heating season		Average							

Indoor unit		SRK20ZM-S	SRK25ZM-S	SRK35ZM-S	SRK50ZM-S	SRK25ZMP-S	SRK35ZMP-S	SRK45ZMP-S
Outdoor unit		SRC20ZM-S	SRC25ZM-S	SRC35ZM-S	SRC50ZM-S	SRC25ZMP-S	SRC35ZMP-S	SRC45ZMP-S
Energy class (cooling/heating)		A++/A+	A++/A+	A++/A+	A++/A+	A/A	A++/A+	A/A
SEER		7.00	7.10	7.10	6.30	5.50	6.15	5.38
SCOP (Average climate)		4.05	4.16	4.17	4.20	3.82	4.00	3.81
Pdesignc	kW	2.00	2.50	3.50	5.00	2.50	3.20	4.50
Pdesignh (@-10°C)	kW	2.80	2.90	3.20	4.70	2.80	3.00	3.80
Annual electricity consumption (cooling/heating)	kWh/a	101/968	124/977	173/1074	278/1568	160/1027	183/1052	293/1398
Refrigerant (GWP)		R410A (1975)						
Designated heating season		Average						

Indoor unit		SRF25ZMX-S	SRF35ZMX-S	SRF50ZMX-S	SRR25ZM-S	SRR35ZM-S
Outdoor unit		SRC25ZMX-S	SRC35ZMX-S	SRC50ZMX-S	SRC25ZMX-S	SRC35ZMX-S
Energy class (cooling/heating)		A++/A+	A++/A+	A+/A+	A++/A	A++/A+
SEER		6.90	6.67	6.01	6.43	6.31
SCOP (Average climate)		4.12	4.25	4.19	4.08	4.02
Pdesignc	kW	2.50	3.50	5.00	2.50	3.50
Pdesignh (@-10°C)	kW	3.10	3.50	5.20	3.30	3.55
Annual electricity consumption (cooling/heating)	kWh/a	127/1053	184/1153	292/1736	136/1133	195/1238
Refrigerant (GWP)		R410A (1975)				
Designated heating season		Average				

Indoor unit		FDTC25VF	FDTC35VF	FDTC40VF	FDTC50VF	FDTC60VF
Outdoor unit		SRC25ZMX-S	SRC35ZMX-S	SRC40ZMX-S	SRC50ZMX-S	SRC60ZMX-S
Energy class (cooling/heating)		A++/A+	A++/A+	A++/A	A+/A	A+/A
SEER		6.10	6.12	6.49	5.99	5.74
SCOP (Average climate)		4.13	4.15	3.96	3.85	3.81
Pdesignc	kW	2.55	3.60	4.00	5.00	5.60
Pdesignh (@-10°C)	kW	3.10	3.60	4.00	4.80	5.90
Annual electricity consumption (cooling/heating)	kWh/a	147/1050	207/1215	216/1415	293/1744	342/2171
Refrigerant (GWP)		R410A (1975)				
Designated heating season		Average				

Inverter Multi-split System

Indoor unit		SRK20ZMX-S x 2	SRK20ZMX-S +SRK25ZMX-S	SRK20ZMX-S x 3	SRK20ZMX-S x 3	SRK20ZMX-S x 4	SRK20ZMX-S x 4	SRK20ZMX-S x 5
Outdoor unit		SCM40ZM-S	SCM45ZM-S	SCM50ZM-S	SCM60ZM-S	SCM71ZM-S	SCM80ZM-S	SCM100ZM-S
Energy class (cooling/heating)		A+/A+	A+/A+	A++/A	A++/A+	A++ /A	A++/A	A/A+
SEER		5.92	5.98	6.62	6.55	6.41	6.29	5.10
SCOP (Average climate)		4.05	4.03	3.95	4.01	3.81	3.81	4.02
Pdesignc	kW	4.00	4.50	5.00	6.00	7.10	8.00	10.00
Pdesignh (@-10°C)	kW	5.20	5.80	5.90	7.10	7.30	7.50	10.10
Annual electricity consumption (cooling/heating)	kWh/a	237/1798	264/2014	265/2091	321/2480	388/2682	446/2755	687/3519
Refrigerant (GWP)		R410A (1975)						
Designated heating season		Average						

R410A refrigerant contained in the products is a fluorinated greenhouse gas listed in Regulation (EU) No 517/2014.

INDOOR UNIT

Unit: mm

Wall Mounted type

SRK20ZMX-S SRK25ZMX-S SRK35ZMX-S SRK50ZMX-S SRK60ZMX-S

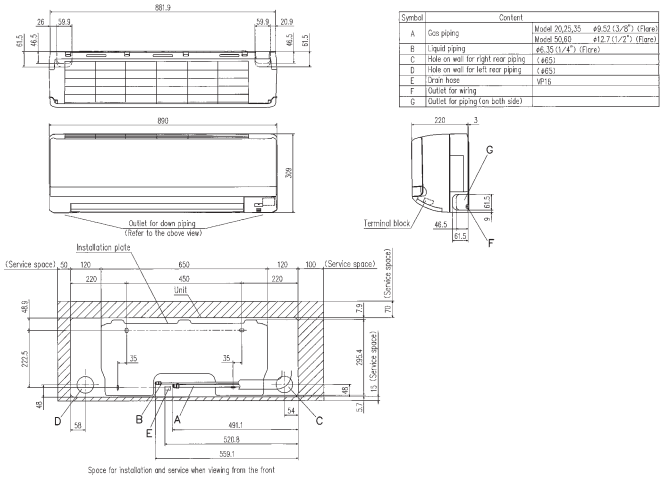

Symbol	Content	
A	Gas piping	Model 20,25,35 ø9.52 (3/8") (Flare) Model 50,60 ø12.7 (1/2") (Flare)
B	Liquid piping	ø6.35 (1/4") (Flare)
C	Hole on wall for right rear piping	(ø65)
D	Hole on wall for left rear piping	(ø65)
E	Drain hose	VP16
F	Outlet for wiring	
G	Outlet for piping (on both side)	

SRK63ZR-S SRK71ZR-S SRK80ZR-S

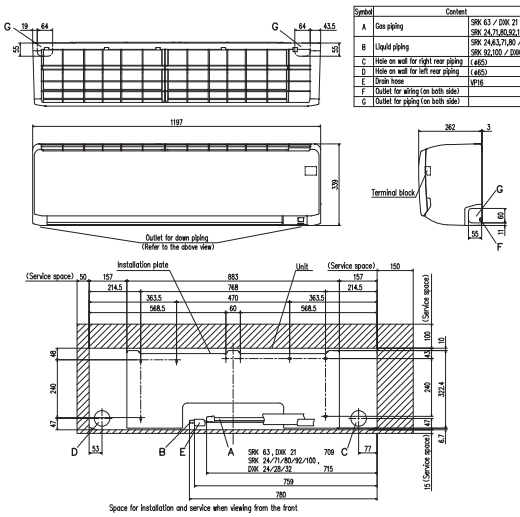

Symbol	Content	
A	Gas piping	SRK 63 / DXK 21 ø12.7 (1/2") (Flare) SRK 24,71,80,92,100 / DXK 24,28,32 ø15.88 (5/8") (Flare)
B	Liquid piping	SRK 24,63,71,80 / DXK 21,24,28 ø6.35 (1/4") (Flare) SRK 92,100 / DXK 32 ø9.52 (3/8") (Flare)
C	Hole on wall for right rear piping	(ø65)
D	Hole on wall for left rear piping	(ø65)
E	Drain hose	VP16
F	Outlet for wiring (on both side)	
G	Outlet for piping (on both side)	

SRK20ZM-S SRK25ZM-S SRK35ZM-S SRK50ZM-S

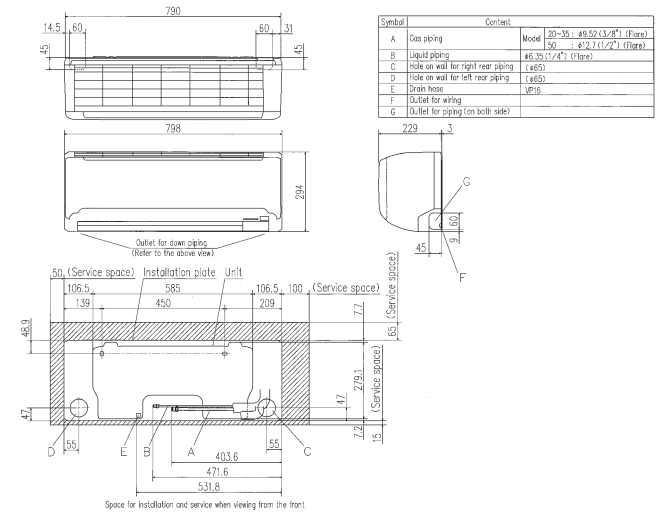

Symbol	Content	
A	Gas piping	Model 20~35 : ø9.52 (3/8") (Flare) 50 : ø12.7 (1/2") (Flare)
B	Liquid piping	ø6.35 (1/4") (Flare)
C	Hole on wall for right rear piping	(ø65)
D	Hole on wall for left rear piping	(ø65)
E	Drain hose	VP16
F	Outlet for wiring	
G	Outlet for piping (on both side)	

SRK25ZMP-S SRK35ZMP-S SRK45ZMP-S

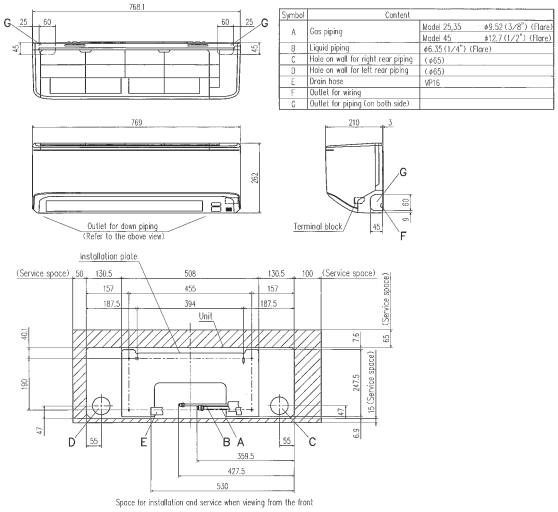

Symbol	Content	
A	Gas piping	Model 25,35 ø9.52 (3/8") (Flare) Model 45 ø12.7 (1/2") (Flare)
B	Liquid piping	ø6.35 (1/4") (Flare)
C	Hole on wall for right rear piping	(ø65)
D	Hole on wall for left rear piping	(ø65)
E	Drain hose	VP16
F	Outlet for wiring	
G	Outlet for piping (on both side)	

SRK63HE-S1 SRK71HE-S1

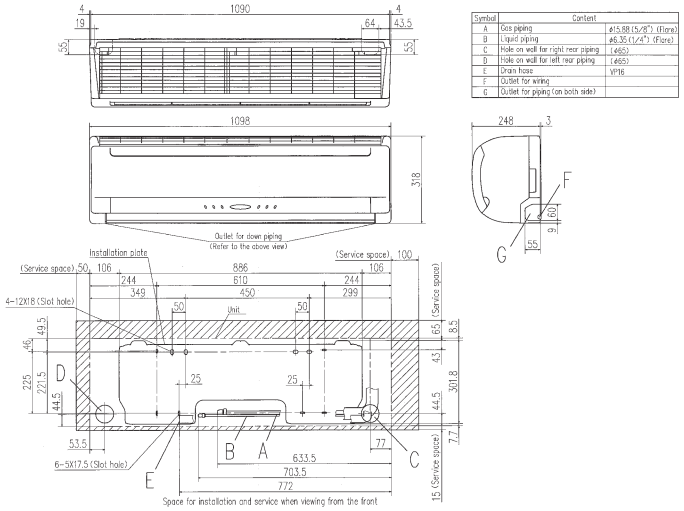

Symbol	Content
A	Gas piping ø15.88 (5/8") (Flare)
B	Liquid piping ø6.35 (1/4") (Flare)
C	Hole on wall for right rear piping (ø65)
D	Hole on wall for left rear piping (ø65)
E	Drain hose VP16
F	Outlet for wiring
G	Outlet for piping (on both side)

SRK20HG-S SRK28HG-S SRK40HG-S

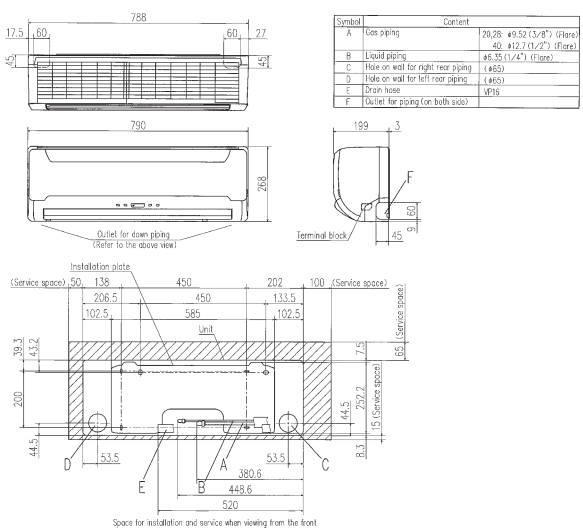

Symbol	Content	
A	Gas piping	20,28 ø9.52 (3/8") (Flare) 40 ø12.7 (1/2") (Flare)
B	Liquid piping	ø6.35 (1/4") (Flare)
C	Hole on wall for right rear piping	(ø65)
D	Hole on wall for left rear piping	(ø65)
E	Drain hose	VP16
F	Outlet for piping (on both side)	

INDOOR UNIT

Unit: mm

Wall Mounted type

SRK50HE-S1 SRK56HE-S1

Symbol	Content	
A	Gas piping	ø12.7 (1/2") (Flare)
B	Liquid piping	ø6.35 (1/4") (Flare)
C	Hole on wall for right rear piping	(ø65)
D	Hole on wall for left rear piping	(ø65)
E	Drain hose	VP16 (O. D. 22)
F	Outlet for piping (on both side)	

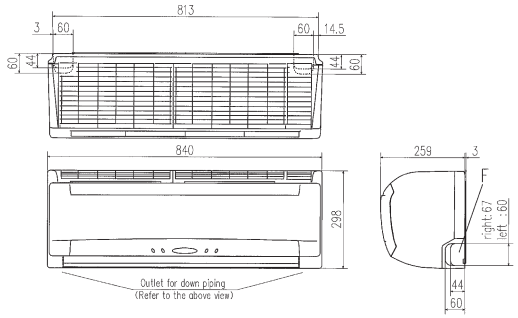

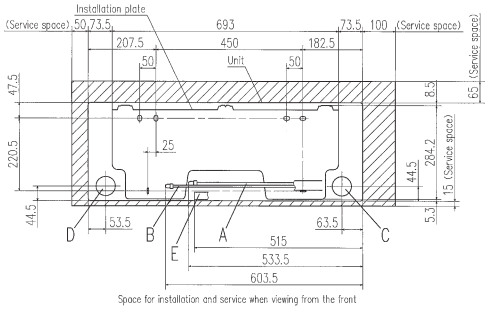

Floor Standing type

SRF25ZMX-S SRF35ZMX-S SRF50ZMX-S

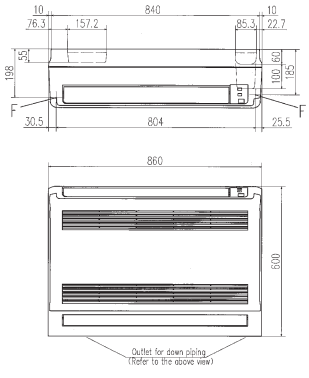

Symbol	Content		
A	Gas piping	Model	25,35 : ø9.52 (3/8") (Flare) 50 : ø12.7 (1/2") (Flare)
B	Liquid piping		ø6.35 (1/4") (Flare)
C	Hole on wall for right rear piping		(ø65)
D	Hole on wall for left rear piping		(ø65)
E	Drain hose		VP16 (O. D. 22)
F	Screw point fasten the indoor unit		ø5
G	Outlet for piping (on both side)		

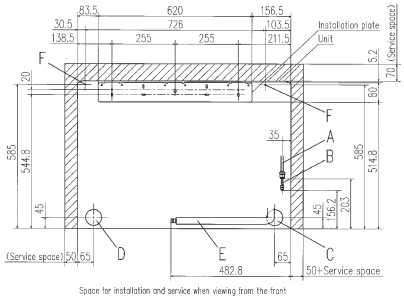

Ceiling Concealed

SRR25ZM-S SRR35ZM-S

Symbol	Content	
	Model	25,35
A	Gas piping	ø9.52 (3/8") (Flare)
B	Liquid piping	ø6.35 (1/4") (Flare)
C1	Drain piping	VP25 (I.D.25 , O.D.32) (Used with attached connector)
C2	Drain piping (Gravity drainage)	VP25 (I.D.25 , O.D.32) (Used with attached connector)
D	Hole for wiring	ø25 x 2
E	Suspension bolts	(M10)
F	Inspection hole	(450X450) , (320X770)

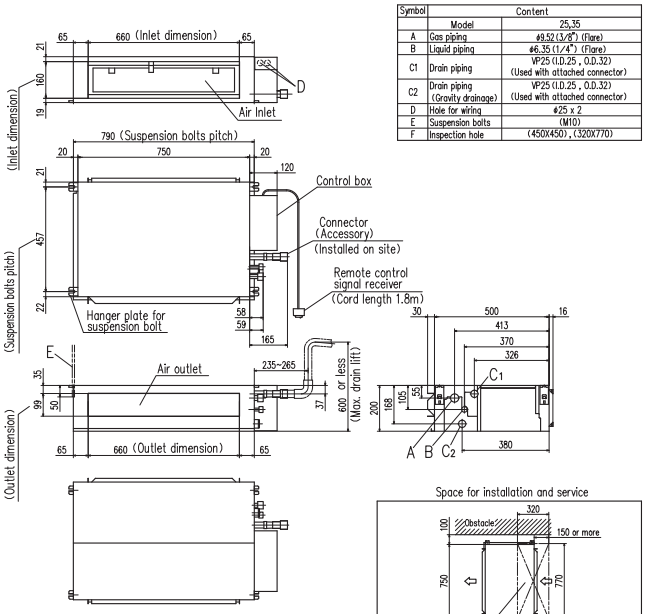

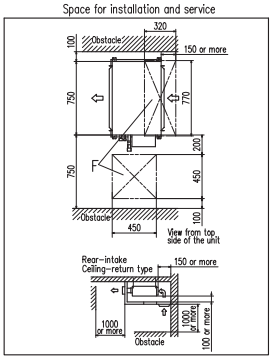

SRR50ZM-S SRR60ZM-S

Symbol	Content	
	Model	50,60
A	Gas piping	ø12.7 (1/2") (Flare)
B	Liquid piping	ø6.35 (1/4") (Flare)
C1	Drain piping	VP25 (I.D.25 , O.D.32) (Used with attached connector)
C2	Drain piping (Gravity drainage)	VP25 (I.D.25 , O.D.32) (Used with attached connector)
D	Hole for wiring	ø25 x 2
E	Suspension bolts	(M10)
F	Inspection hole	(450X450) , (320X970)

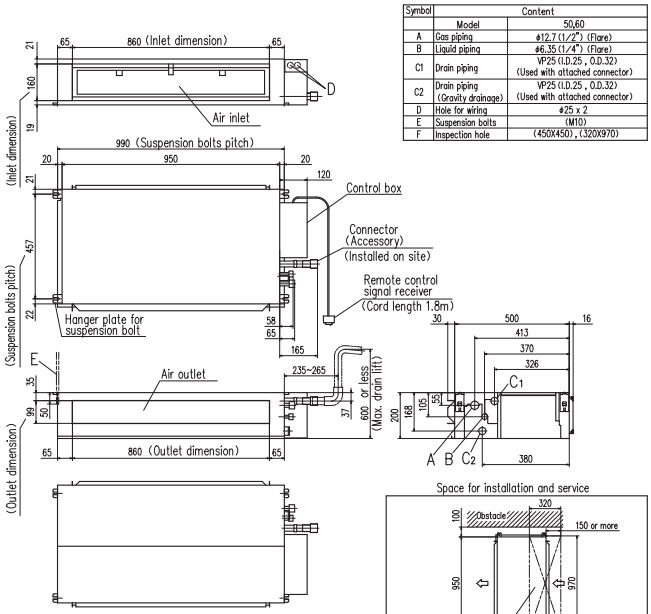

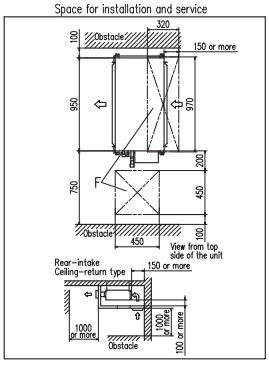

INDOOR UNIT

Unit: mm

4way Ceiling Cassette type

FDTC25VF FDTC35VF FDTC40VF FDTC50VF FDTC60VF

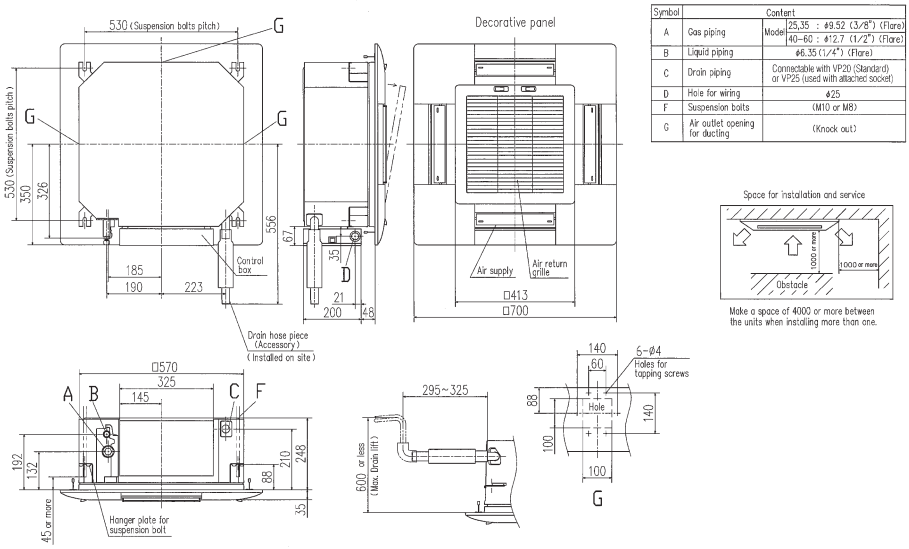

Symbol	Content	
A	Gas piping	Model: 25,35 : ø9.52 (3/8") (Flare); 40~60 : ø12.7 (1/2") (Flare)
B	Liquid piping	ø6.35 (1/4") (Flare)
C	Drain piping	Connectable with VP20 (Standard) or VP25 (used with attached socket)
D	Hole for wiring	ø25
F	Suspension bolts	(M10 or M8)
G	Air outlet opening for ducting	(Knock out)

Duct Connected-Low/Middle Static Pressure-

FDUM50VF

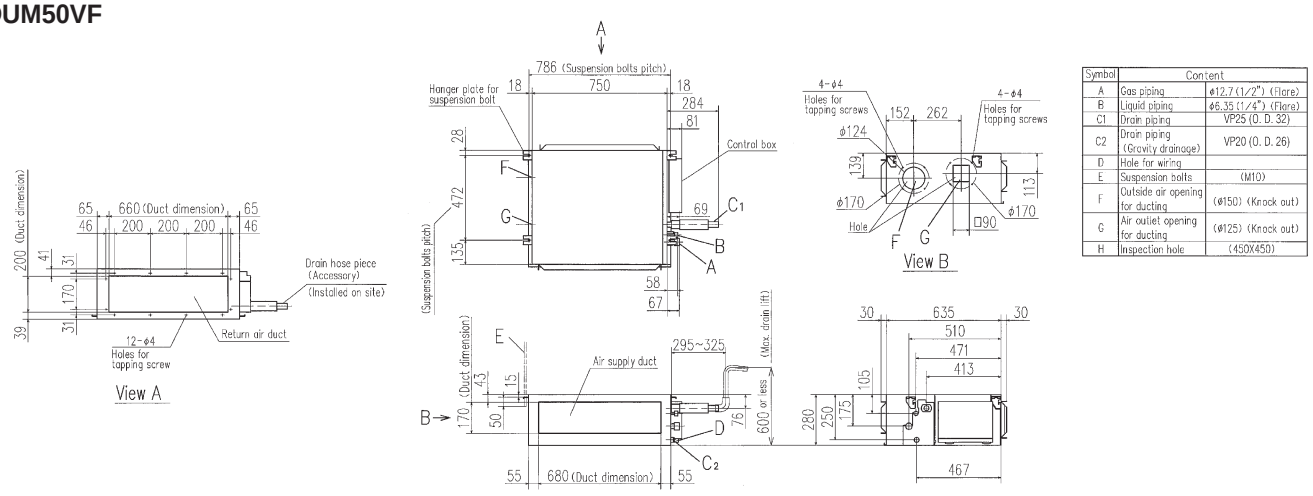

Symbol	Content	
A	Gas piping	ø12.7 (1/2") (Flare)
B	Liquid piping	ø6.35 (1/4") (Flare)
C1	Drain piping	VP25 (O. D. 32)
C2	Drain piping (Gravity drainage)	VP20 (O. D. 26)
D	Hole for wiring	
E	Suspension bolts	(M10)
F	Outside air opening for ducting	(ø150) (Knock out)
G	Air outlet opening for ducting	(ø125) (Knock out)
H	Inspection hole	(450X450)

Ceiling Suspended

FDE50VG

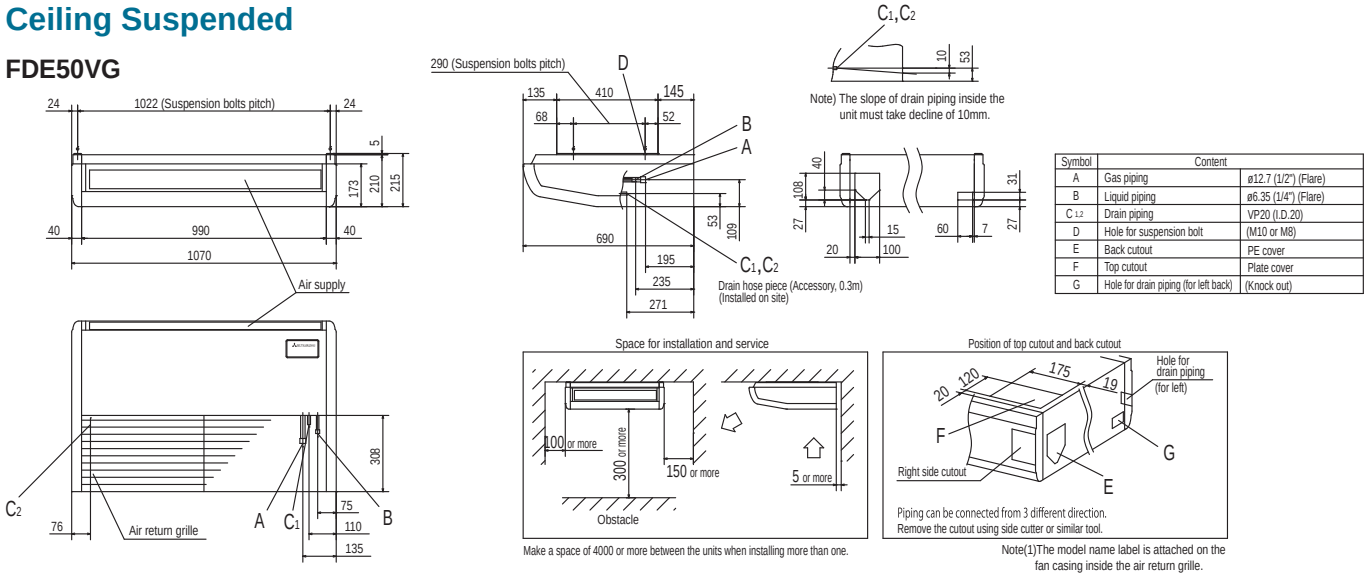

Symbol	Content	
A	Gas piping	ø12.7 (1/2") (Flare)
B	Liquid piping	ø6.35 (1/4") (Flare)
C1,2	Drain piping	VP20 (I.D.20)
D	Hole for suspension bolt	(M10 or M8)
E	Back cutout	PE cover
F	Top cutout	Plate cover
G	Hole for drain piping (for left back)	(Knock out)

Note(1)The model name label is attached on the fan casing inside the air return grille.

OUTDOOR UNIT

Unit: mm

SRC20ZMX-S SRC25ZMX-S SRC35ZMX-S SRC45ZMP-S

Symbol	Content	
A	Service valve connection (gas side)	ϕ9.52 (3/8") (Flare)
B	Service valve connection (liquid side)	ϕ6.35 (1/4") (Flare)
C	Pipe/cable draw-out hole	
D	Drain discharge hole	ϕ20×2places
E	Anchor bolt hole	M10×4places

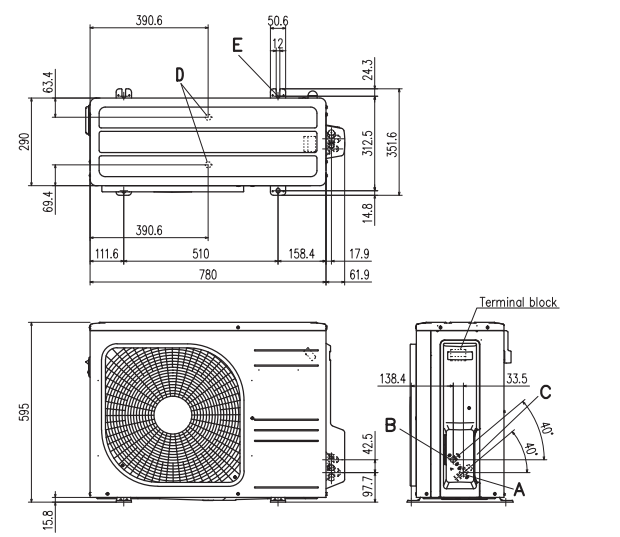

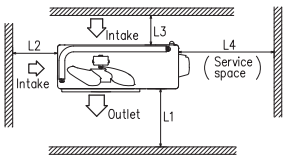

Minimum installation space

Examples of installation / Dimensions	I	II	III	IV
L1	Open	280	280	180
L2	100	75	Open	Open
L3	100	80	80	80
L4	250	Open	250	Open

SRC40ZMX-S SRC50ZMX-S SRC60ZMX-S SRC50ZM-S SRC63ZR-S

Symbol	Content	
A	Service valve connection (gas side)	ϕ12.7 (1/2") (Flare)
B	Service valve connection (liquid side)	ϕ6.35 (1/4") (Flare)
C	Pipe/cable draw-out hole	
D	Drain discharge hole	ϕ20×5places
E	Anchor bolt hole	M10×4places

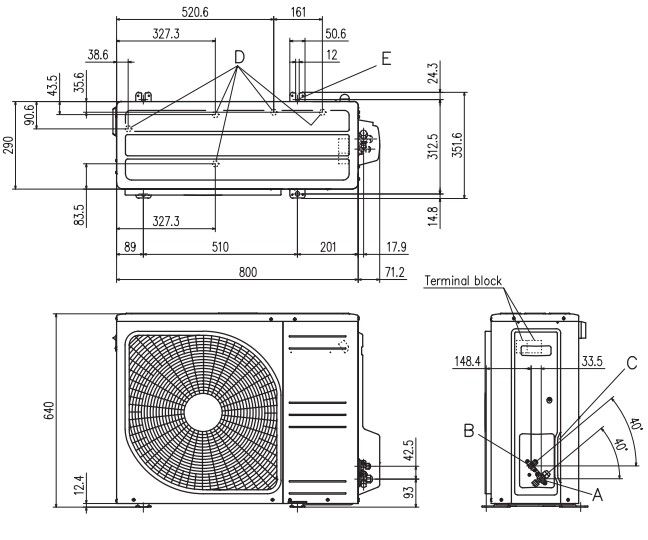

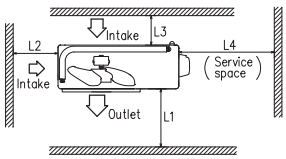

Minimum installation space

Examples of installation / Dimensions	I	II	III	IV
L1	Open	280	280	180
L2	100	75	Open	Open
L3	100	80	80	80
L4	250	Open	250	Open

SRC20ZM-S SRC25ZM-S SRC35ZM-S

Symbol	Content	
A	Service valve connection (gas side)	ϕ9.52 (3/8") (Flare)
B	Service valve connection (liquid side)	ϕ6.35 (1/4") (Flare)
C	Pipe/cable draw-out hole	
D	Drain discharge hole	ϕ20×2places
E	Anchor bolt hole	M10×4places

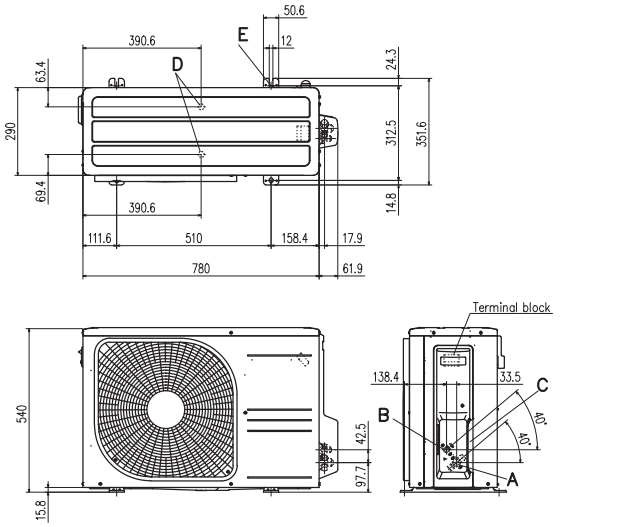

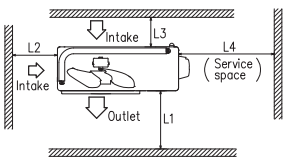

Minimum installation space

Examples of installation / Dimensions	I	II	III	IV
L1	Open	280	280	180
L2	100	75	Open	Open
L3	100	80	80	80
L4	250	Open	250	Open

SRC71ZR-S

Symbol	Content	
A	Service valve connection (gas side)	ϕ15.88 (5/8") (Flare)
B	Service valve connection (liquid side)	ϕ6.35 (1/4") (Flare)
C	Pipe/cable draw-out hole	
D	Drain discharge hole	ϕ20 x 3 places
E	Anchor bolt hole	M10 x 4 places

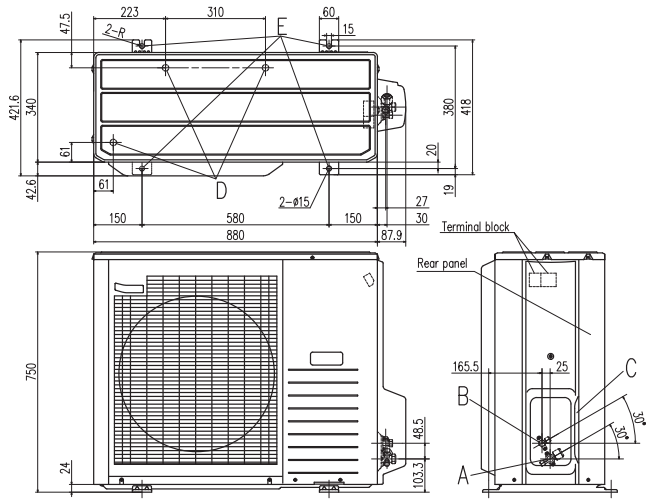

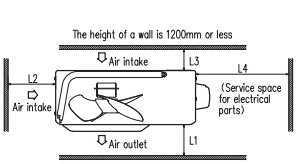

Minimum installation space

Examples of installation / Dimensions	I	II	III
L1	Open	Open	500
L2	300	250	Open
L3	100	150	100
L4	250	250	250

OUTDOOR UNIT

Unit: mm

SRC80ZR-S

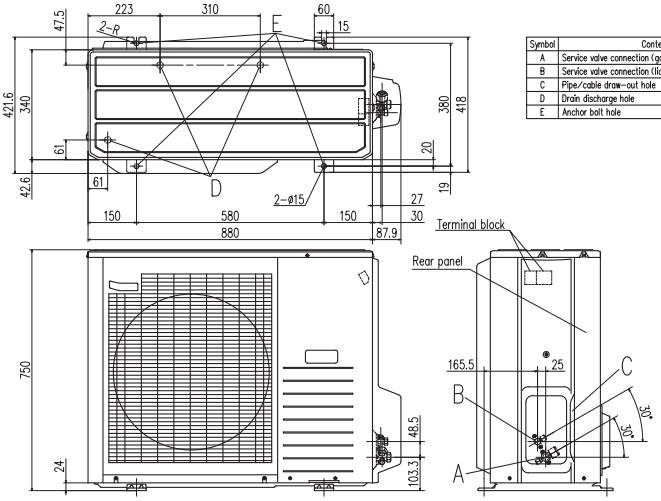

Symbol	Content	
A	Service valve connection (gas side)	⌀15.88 (5/8") (Flare)
B	Service valve connection (liquid side)	⌀6.35 (1/4") (Flare)
C	Pipe/cable draw-out hole	
D	Drain discharge hole	⌀20 x 3 places
E	Anchor bolt hole	M10 x 4 places

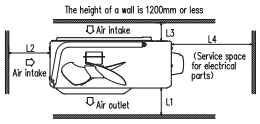

Minimum installation space

Examples of installation / Dimensions	I	II	III
L1	Open	Open	500
L2	300	250	Open
L3	100	150	100
L4	250	250	250

SRC25ZMP-S SRC35ZMP-S

Symbol	Content	
A	Service valve connection (gas side)	⌀9.52 (3/8") (Flare)
B	Service valve connection (liquid side)	⌀6.35 (1/4") (Flare)
C	Pipe/cable draw-out hole	
D	Drain discharge hole	⌀20×2places
E	Anchor bolt hole	M10×4places

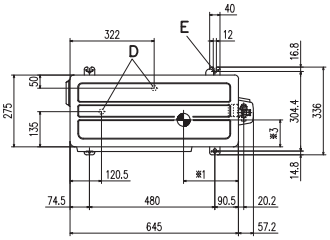

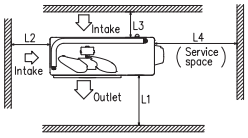

Minimum installation space

Examples of installation / Dimensions	I	II	III	IV
L1	Open	280	280	180
L2	100	100	Open	Open
L3	100	80	80	80
L4	250	Open	250	Open

Dimensions / MODEL	※1	※2	※3
DXC09Z5-S/A	210	240	103
DXC12Z5-S/A	220	240	108

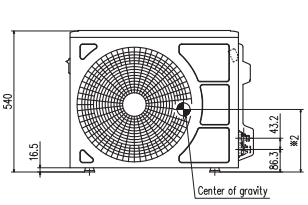

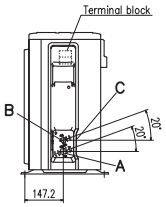

SRC20HG-S SRC28HG-S SRC40HG-S

Symbol	Content	
A	Service valve connection (gas side)	20,28: ⌀9.52 (3/8") (Flare) 40: ⌀12.7 (1/2") (Flare)
B	Service valve connection (liquid side)	⌀6.35 (1/4") (Flare)
C	Pipe/cable draw-out hole	
D	Drain discharge hole	⌀20 x 3 places
E	Anchor bolt hole	M10 x 4 places

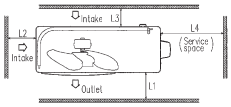

Minimum installation space

Examples of installation / Dimensions	
L1	600
L2	100
L3	100
L4	OPEN

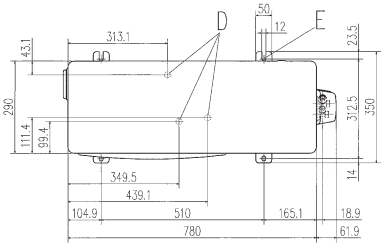

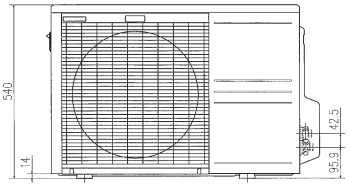

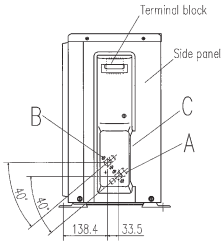

SRC50HE-S1 SRC56HE-S1 SRC63HE-S1

Symbol	Content	
A	Service valve connection (gas side)	⌀12.7 (1/2") (Flare)
B	Service valve connection (liquid side)	⌀6.35 (1/4") (Flare)
C	Pipe/cable draw-out hole	
D	Drain discharge hole	⌀20 x 3 places
E	Anchor bolt hole	M10 x 4 places

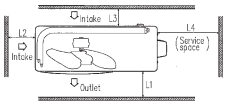

Minimum installation space

Examples of installation / Dimensions	
L1	600
L2	100
L3	100
L4	OPEN

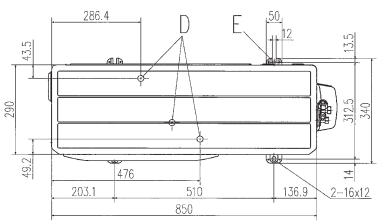

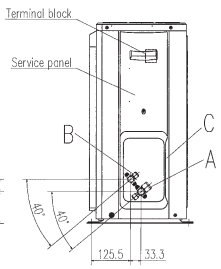

SRC71HE-S1

Symbol	Content	
A	Service valve connection (gas side)	⌀15.88 (5/8") (Flare)
B	Service valve connection (liquid side)	⌀6.35 (1/4") (Flare)
C	Pipe/cable draw-out hole	
D	Drain discharge hole	⌀20 x 3 places
E	Anchor bolt hole	M10 x 4 places

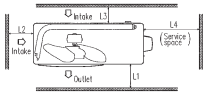

Minimum installation space

Examples of installation / Dimensions	
L1	600
L2	100
L3	100
L4	OPEN

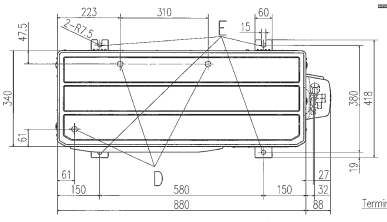

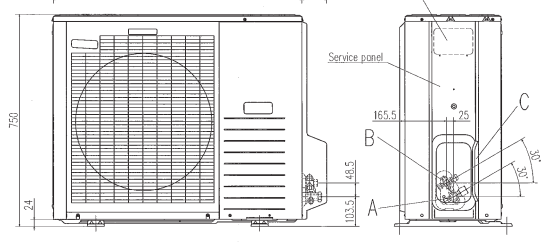

OUTDOOR UNIT

Unit: mm

SCM40ZM-S SCM45ZM-S

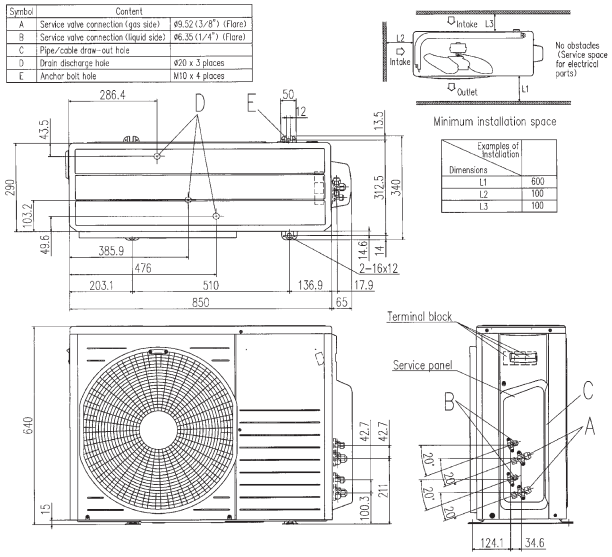

SCM50ZM-S SCM60ZM-S

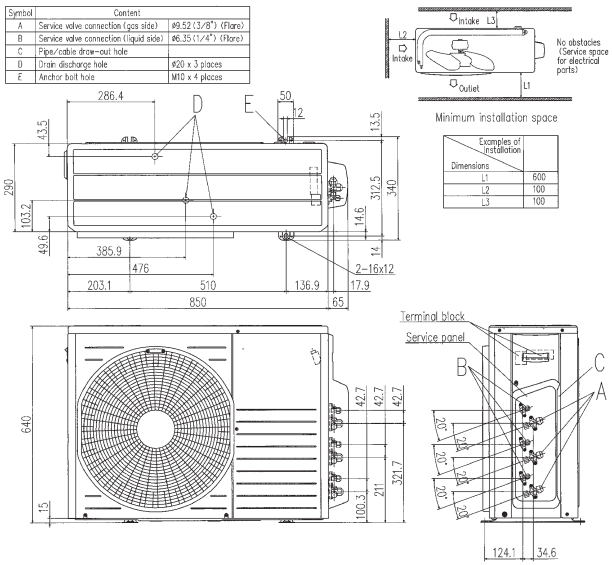

SCM71ZM-S SCM80ZM-S

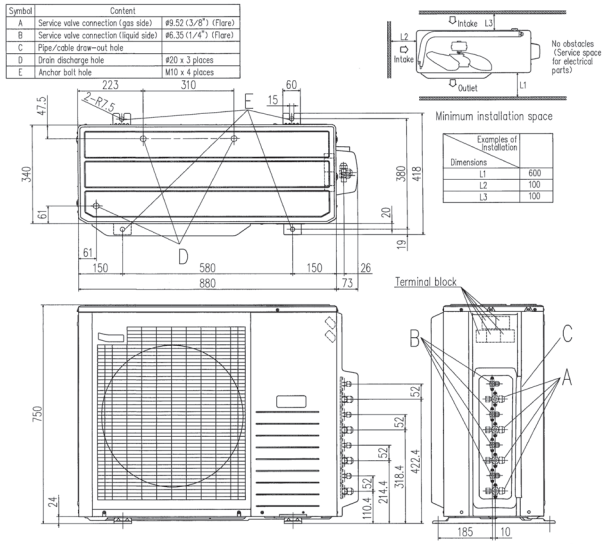

SCM100ZM-S

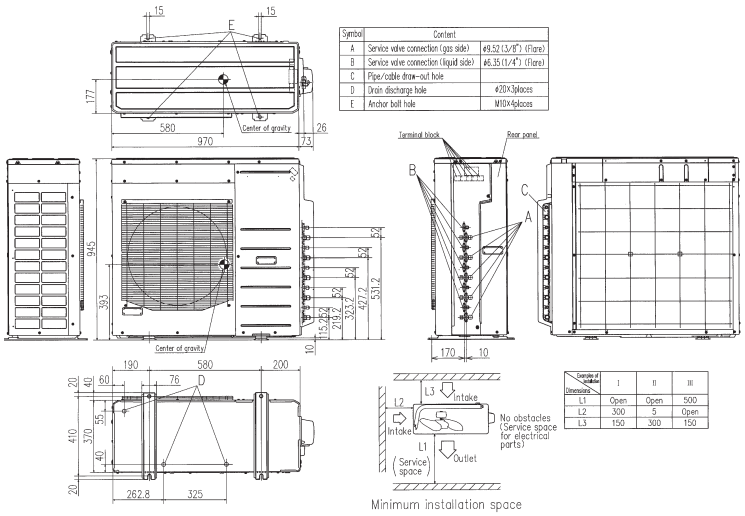

SCM125ZM-S

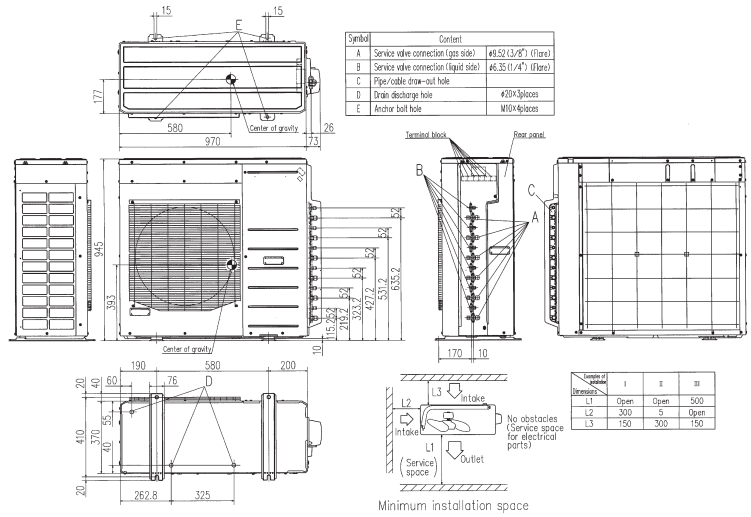

Before starting use

Heating performance
The heating performance values (kW) described in catalogue are the values obtained by operating at an outdoor temperature of 7˚C and indoor temperature of 20˚C as set forth in the ISO Standards. As the heating performance decreases as the outdoor temperature drops, if the outdoor temperature is too low and the heating performance is insufficient, use other heating appliances as well.

Indication of sound values
The sound values are the values (A scale) measured in a chamber such as an anechoic chamber following the ISO Standards. In the actual installation state, the value is normally larger than the values given in the catalog due to the effect of surrounding noise and echo. Take this into consideration when installing.

Use in oil atmosphere
Avoid installing this unit in as atmosphere where oil scatters or builds up, such as in a kitchen or machine factory.
If the oil adheres to the heat exchanger, the heat exchanging performance will drop, mist may be generated, and the synthetic resin parts may deform and break.

Use in acidic or alkaline atmosphere
If this unit is used in acidic atmosphere such as hot spring areas having high level of sulfuric gases or in alkaline atmosphere including ammonia or calcium chloride, places where the exhaust of the heat exchanger is sucked in, or at coastal areas where the unit is subject to salt breezes, the outer plate or heat exchanger, etc., will corrode. Please ask a dealer or specialist when you use an air conditioner in places differing from a general atmosphere.

Use in places with high ceilings
If the ceiling is high, install a circulator to improve the heat and air flow distribution when heating.

Refrigerant leakage
The refrigerant (R410A) used for the Residential Air conditioner is non-toxic and inflammable in its original state.
However, in consideration of a state where the refrigerant leaks into the room, measures against refrigerant leaks must be taken in small rooms where the tolerable level could be exceeded. Take measures by installing ventilation devices, etc.

Use in snowy areas
Take the following measures when installing the outdoor unit in snowy areas.

·Snow-prevention
Install a snow-prevention hood so that the snow does not obstruct the air intake port or enter and freeze in the outdoor unit.

·Snow piling
In areas with heavy snow fall, the piled snow could block the air intake port. In this case, a frame that is 50cm or higher than the estimated snow fall must be installed underneath the outdoor unit.

Automatic defrosting device
If the temperature is low, and the humidity is high, frost will stick to the heat exchanger of the outdoor unit. If use is continued, the heating performance will drop.
The "Automatic defrosting device" will function to remove this frost.
After heating for approx, three to ten minutes, it will stop, and the frost will be removed. After defrosting, hot air will be blown again.

Servicing the air-conditioner
After the air-conditioner is used for several seasons, dirt will build up in the air-conditioner causing the performance to drop. In addition to regular servicing, we recommend the maintenance contract (charged for) by a specialist.

⚠ Safety Precautions

Air-conditioner usage target
The air-conditioner described in this catalog is a dedicated cooling/heating device for human use.
Do not use it for special applications such as the storage of foodstuffs, animals or plants, precision devices or valuable art, etc.
This could cause the quality of the items to drop, etc.
Do not use this for cooling vehicles or ships. Water leakage or current leaks could occur.

Before use
Always read the "User's Manual" thoroughly before starting use.

Installation
Always commission the installation to a dealer or specialist. Improper installation will lead to water leakage, electric shocks and fires.
Make sure that the outdoor unit is stable in installation. Fix the unit to stable base.

Usage place
Do not install in places where combustible gas could leak or where there are sparks.
Installation in a place where combustible gas could be generated, flow or accumulate, or places containing carbon fibers could lead to fires.

MITSUBISHI HEAVY INDUSTRIES, LTD.

Mitsubishi Heavy Industries, Ltd.
Air-Conditioning & Refrigeration Division
Machinery Equipment & Infrastructure
16-5, Konan 2-chome, Minato-ku, Tokyo, 108-8215 Japan
http://www.mhi.co.jp

Our factories are ISO9001 and ISO14001 certified.

Certified ISO 9001

BIWAJIMA PLANT
Mitsubishi Heavy Industries, Ltd.
Air-conditioning & Refrigeration Systems Headquarters
Certified ISO 9001
Certificate number : JQA-0709

MITSUBISHI HEAVY INDUSTRIES-MAHAJAK AIR CONDITIONERS CO., LTD.
Certified ISO 9001
Certificate Number : 04100 1998 0813

Certified ISO 14001

BIWAJIMA PLANT
Mitsubishi Heavy Industries, Ltd.
Air-conditioning & Refrigeration Systems Headquarters
Certificate Number : YK44CC3822

MITSUBISHI HEAVY INDUSTRIES-MAHAJAK AIR CONDITIONERS CO.,LTD.
Certificate Number : 04104 1998 0813 ES

(COMPANY) participates in the ECC programme for (PROGRAMME).
Check ongoing validity of certificate:
www.eurovent-certification.com or
www.certiflash.com

Not on HG/HE models

Because of our policy of continuous improvement, we reserve right to make changes in all specifications without notice.
Edited in Japan