MITSUBISHI HEAVY INDUSTRIES

MOVE THE WORLD FORWARD MITSUBISHI HEAVY INDUSTRIES GROUP

Residential Air-Conditioners

SR series

High Performance Air-Conditioning

2019

Elegant Timeless Design

The ZSX and ZS series air-conditioners have been stylishly designed with rounded contours that fit beautifully into any of Europe's diverse interior settings. The design was created by the Italian industrial design studio Tensa srl, based in Milan, to respond to a broad spectrum of local user needs.

ZSX series

All SRK series line up available for R32 refrigerant

R32 is the next generation refrigerant that boasts nearly 70% lower Global Warming Potential Rate than R410A. Due to its superior qualities R32 offers amazing energy efficiency benefits. It has a potential refrigerating effect 1.5 times that of R410A meaning it needs less energy to achieve the desired temperature and requires less refrigerant volume to operate.
Wall-mounted type units are compatible with both R32 and R410A.

R32

Leading energy efficiency and high reliability with Mitsubishi Heavy Industries advanced technology.

What kind of solution Mitsubishi Heavy Industries Air-Conditioner can offer?

- Keep comfort by quick cool-down/warm-up
- Energy saving for sustainable society
- Comfort Interior
- Reliable electrical appliance for long term use

Mitsubishi Heavy Industries advanced technology can provide a variety of solutions.

A'DESIGN AWARD WINNER 2017 SILVER

Design award for Mitsubishi Heavy Industries SRK-ZSX air conditioning unit

Mitsubishi Heavy Industries has been awarded the 2017 Silver A' Design Award in the 'Engineering and Technical Design' category for its SRK-ZSX Diamond Series air conditioning unit. It was created to meet the demanding expectations of the European air conditioning market.

Energy Saving

High energy saving with comfort air conditioning ; provides the user with multiple solutions between comfort and energy savings.
All the models can achieve high energy efficiency by use of Mitsubishi Heavy Industries technology, such as high performance compressor, DC PAM inverter technology.

Quiet and Comfort

Mitsubishi Heavy Industries Thermal Systems offers a unique modest air conditioner; quiet and comfortable which provides precise air flow and capacity control.

Clean Air

Allergen clear operation cleans air using a control scheme unique to Mitsubishi Heavy Industries Thermal Systems. Furthermore, a wide array of air purification filters and self-cleaning operation helps keep the room air clean.

PRODUCT LINE UP

■ SINGLE-SPLIT

Model		Capacity Range (kW : Rated cooling capacity)										
		2.0kW	2.5kW	3.5kW	4.0kW	4.5kW	5.0kW	6.0kW	6.3kW	7.1kW	8.0kW	10.0kW
WALL MOUNTED TYPE Diamond Series SRK-ZSX *1	R32 -W P20	● A+++	● A+++	● A+++			● A++	● A++				
	R410A -S P26	● A+++	● A+++	● A+++			● A++	● A++				
WALL MOUNTED TYPE NEW Diamond Series SRK-ZR *1	R32 -W P24								● A++	● A++	● A++	
	R410A -S P27								● A++	● A++	● A++	● A++
WALL MOUNTED TYPE NEW Premium Series SRK-ZS *1	R32 -W P22	● A+++	● A+++	● A++			● A++					
	R410A -S P28	● A++	● A++	● A++			● A++					
WALL MOUNTED TYPE NEW Standard Series SRK-ZSP	R32 -W P25		● A++	● A++		● A++						
	R410A -S P29		● A	● A++		● A						
FROOR STANDING TYPE SRF-ZMX *1	R410A P30		● A++	● A++			● A++					
CEILING CONCEALED TYPE SRR-ZM *1	R410A P31		● A++	● A++								
CEILING CASSETTE TYPE FDTC-VF *1	R410A P32		● A++	● A++	● A++		● A+	● A+				

ZSX · ZS series colour variations available

Users can choose the model from three different colours allowing more choice depending on the style of the room.

ZSX series

Pure White

Black & White

Titanium

■ MULTI-SPLIT SYSTEM

Model		4.0kW	4.5kW	5.0kW	6.0kW	7.1kW	8.0kW	10.0kW	12.5kW
		40ZS-S	45ZS-S	50ZS-S1	60ZM-S1	71ZM-S1	80ZM-S1	100ZM-S	125ZM-S
Number of connectable indoor units		2	2	2 - 3	2 - 3	2 - 4	2 - 4	4 - 5	4 - 6
OUTDOOR UNIT R410A SCM*2 P34		A++		NEW A++		A++		A+ *3	
WALL MOUNTED TYPE	SRK20ZSX	●	●	●	●	●	●	●	●
	SRK25ZSX	●	●	●	●	●	●	●	●
	SRK35ZSX	●	●	●	●	●	●	●	●
	SRK50ZSX			●	●	●	●	●	●
	SRK60ZSX				●	●	●	●	●
	SRK71ZR							●	●
	SRK20ZS	●	●	●	●	●	●	●	●
	SRK25ZS	●	●	●	●	●	●	●	●
	SRK35ZS	●	●	●	●	●	●	●	●
	SRK50ZS			●	●	●	●	●	●
	SKM20ZSP	●	●	●					
	SKM25ZSP	●	●	●					
	SKM35ZSP	●	●	●					
FROOR STANDING TYPE	SRF25ZMX	●	●	●	●	●	●	●	●
	SRF35ZMX	●	●	●	●	●	●	●	●
	SRF50ZMX			●	●	●	●	●	●
CEILING CONCEALED TYPE 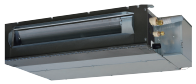	SRR25ZM	●	●	●	●	●	●	●	●
	SRR35ZM	●	●	●	●	●	●	●	●
	SRR50ZM			●	●	●	●	●	●
	SRR60ZM				●	●	●	●	●
CEILING CASSETTE TYPE	FDTC25VF	●	●	●	●	●	●	●	●
	FDTC35VF	●	●	●	●	●	●	●	●
	FDTC50VF			●	●	●	●	●	●
	FDTC60VF				●	●	●	●	●
DUCT CONNECTED TYPE NEW 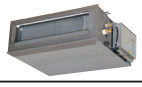	FDUM50VH			●	●	●	●	●	●
CEILING SUSPENDED TYPE NEW	FDE50VH			●	●	●	●	●	●

ZS series

Pure White

Black & White

Titanium

*1 Common use for both Single and Multi.
*2 Energy class depends on connected indoor units.
*3 Energy label applies below cooling capacity 12kW.

NEXT GENERATION REFRIGERANT R32

F-GAS REGULATION (EU) No 517/2014

- Introduced in January 2015 to regulate the use of Fluorinated Greenhouse Gases **(F-Gases)**

- The Hydrofluorocarbons (HFCs) are F-Gases used in the HVACR sector (Heating, Ventilation, Air- Conditioning and Refrigeration)

HFCs Phase Down

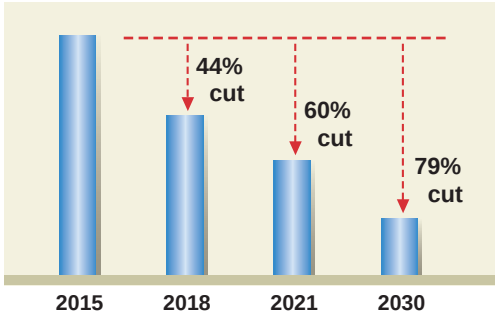

OBJECTIVE

- To protect the environment by reducing the F-Gases emissions

IMPACT ON HFCs (in EU)

- HFCs Phase Down
- HFCs Ban

SOLUTIONS

- Use lower GWP* refrigerants in new equipment
- Use high-efficiency equipment with less refrigerant charge
- Check refrigerant leaks regularly

* **GWP** is the Global Warming Potential of a refrigerant, representing how much heat an **F-Gas** traps in the atmosphere

HFCs Ban

2020

- GWP ≥ 150 — Portable room air-conditioner
- GWP ≥ 2500 — Stationary refrigeration*1 (except < -50°C)
- GWP ≥ 2500 — Commercial hermetically sealed refrigerators, freezers

2022

- GWP ≥ 150 — Commercial multipack centralised refrigeration
- GWP ≥ 150 — Commercial hermetically sealed refrigerators, freezers

2025

- GWP ≥ 750 — Single Split Fixed Air-Conditioning < 3kg HFC

LOWER GWP + LESS REFRIGERANT CHARGE = LOWER HFCs EMISSIONS

*1 Stationary refrigeration equipment, that contains, or whose functioning relies upon, HFCs with GWP of 2500 or more except equipment intended for application designed to cool products to temperatures below -50°C application

R32 - A Low GWP Refrigerant

- A single component, easy to handle refrigerant
- Known as a component of the blend R410A (50% R32, 50% R125)
- Already used in Air-Conditioning systems worldwide
- Zero Ozone Depletion
- Superior Energy Efficiency vs. R410A
- Reduced refrigerant charge vs. R410A
- Easy to recycle

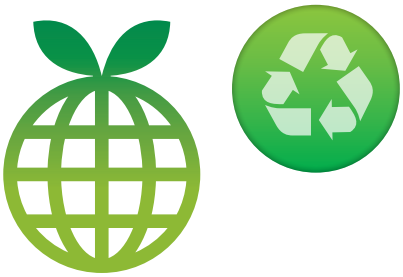

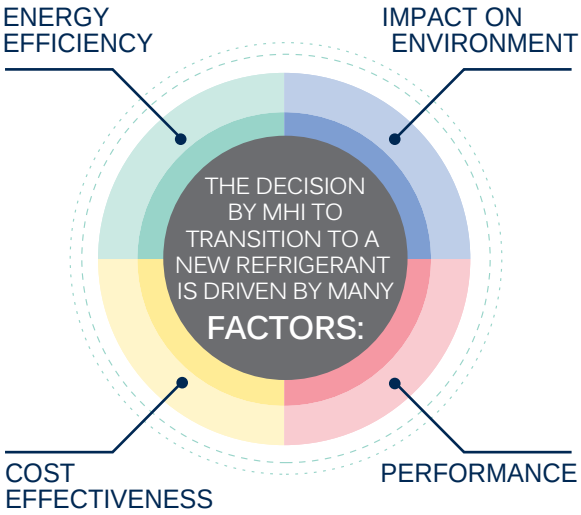

Low Global Warming Potential

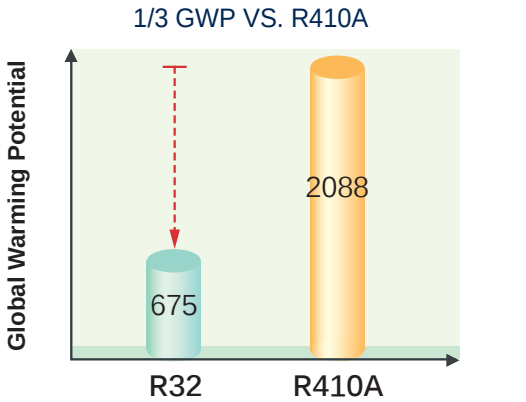

GWP Values based on IPCC 4th Assessment Report

Superior Energy Efficiency

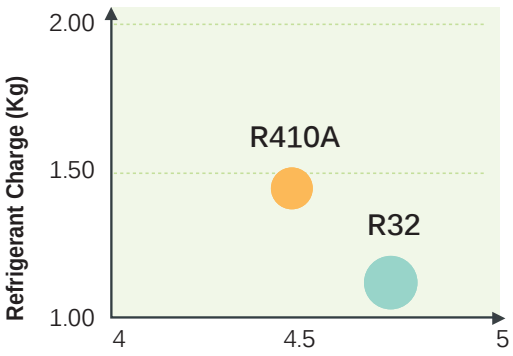

Energy Efficiency Ratio
Based on 3.5 kW wall mounted unit

Reduced Refrigerant Charge

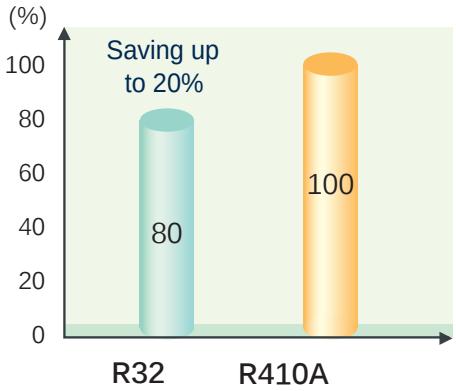

HIGH EFFICIENCY & HIGH TECHNOLOGIES

Consideration for the Environment

Several radical design changes and engineering developments have brought about a vast improvement in energy efficiency and environmental protection.

High efficient Performance: up to Class A +++

Mitsubishi Heavy Industries Thermal Systems classes its entire range with seasonal domestic energy factors that display energy ratings from A + to A +++.
Important energy savings in both cooling mode and heating are acheived thanks to its DC PAM Inverter technology and DC twin rotary compressor. (ZSX series)

Higher Energy class (SEER/SCOP)

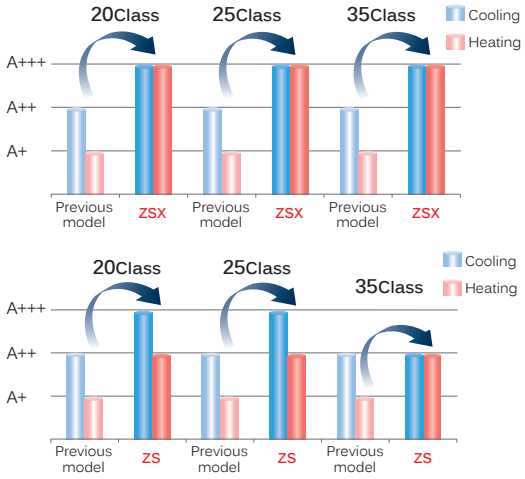

QUICK & HIGH EFFICIENCY Control

DC PAM inverter

An inverter driven system has a number of performance advantages over a constant speed system. For example, its variable compressor outputs can ensure quick heating after a startup and attain a set temperature more quickly.
The air conditioner can then slow down its compressor speed to save energy, keeping comfortable conditions. Moreover, the compressor is DC driven, so it provides higher performance.

DC compressor motor

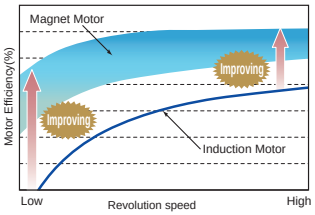

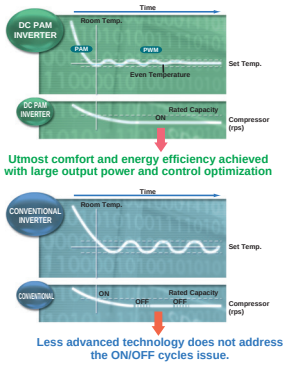

Vector Inverter Control

The inverter control, with the advanced vector control technology, functions at high efficiency.

- Smooth operation from low speed to high speed
- Smooth Sine Voltage Wave form are attained
- Energy efficiency is further improved in low speed range

HIGH EFFICIENCY

DC Twin Rotary Compressor

The newly developed DC twin rotary compressor performs highly efficient operation under the wide range conditions from low speed to high speed.
Besides low vibration, low sound level and high efficiency can be also achieved by the optimization of mechanical parts dimension and by the application of high power Neodymium motor.

Featured on all models of ZSX series

Our Latest Technologies (ZSX series)

[Outdoor unit]

Propeller fan

Matching a propeller fan with a fan motor has been optimized in order to keep the same capacity as that of previous models with less electrical consumption. Synergy effect with leaf grill has increased efficiency by 5% and quietened the sound.

Serration fan

Coated PCB

The printed wiring board of the outdoor unit is coated. It lasts long having a tolerance for humidity.

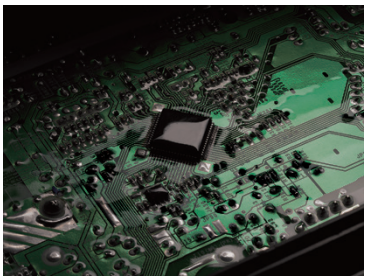

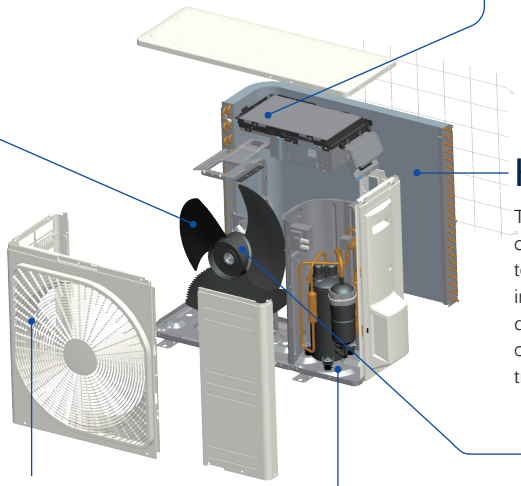

Heat exchanger

Thanks to changing fin configuration from flat sheet to M shape fin, efficiency has increased by 10%. This high dimensional structure provides optimum balance of heat transfer and airflow.

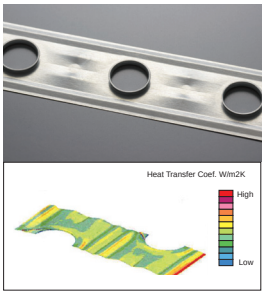

DC Motor

DC fan motor produces high efficiency & high power

Leaf shape grill

The radial shape grill has been developed in order to send airflow efficiently out unit along the grill. Decreasing the load for motor and propeller fan leads to greater energy efficiency and contributes to quieter sound.

Three Sensors

Control of room temperature and humidity is very important for people to live a comfortable life.
Use of three sensors to control indoor temperature, indoor humidity and outdoor temperature
enable unit to obtain optimum air-conditioning.

Sensor for indoor temperature and humidity

Sensor for outdoor temperature

Superior corrosion resistance hot dipping steel sheet

Superior corrosion resistance hot dipping steel sheet is applied at the base of outdoor units.
It has superior corrosion resistance and scratch resistance properties compared to conventional materials.

[Indoor unit]

Heat exchanger

Our optimal combination of fin configuration and copper tube has maximized airflow volume without expanding indoor unit's size in width.The heat exchanger efficiency rate has been drastically improved by 33% compared with that of previous models. Fin can maximize airflow volume and save energy simultaneously.

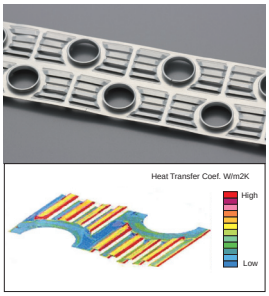

Movable air inlet panel

Applying a movable air inlet panel, minimization of air resistance and advanced design are realized.

* This page is mainly described ZSX series.

AIR FLOW

Jet Air Technology Quiet Air Flow & Long Reach

We used the same aerodynamic analysis technology as used in developing jet engines.

CFD (computational fluid dynamics), used in blade shape design of jet engines, has been applied to the design of air channels in air conditioners to develop the ideal air channel system (air circulation). The jet air stream generated by this air channel system can bring large volume air without consuming much power.
While at the same time, it delivers a uniform gentle breeze to every corner of the room.

(C)Mitsubishi Aircraft Corporation

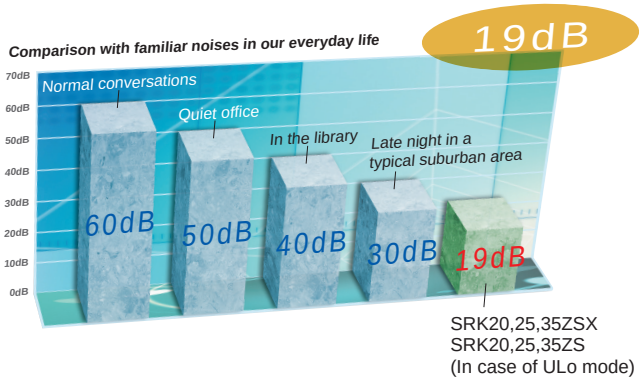

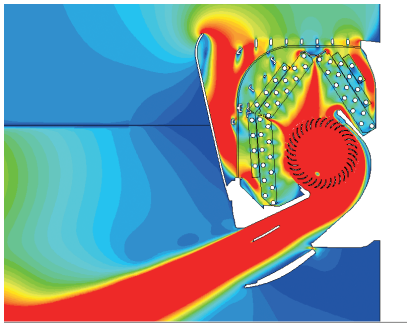

Fast ⟷ Slow
Colors in the figure show the air speed.

Long Reach Air Flow

Long reach air flow is realized by Jet technology. Good for large living rooms and shops, which increases comfort.

Double Flap Large and Small

Double flaps can control optimized air flow, horizontal and long reach air flow in cooling, strong and downward air flow in heating, which can produce comfort room temperature condition.

Programmed air distribution

3D AUTO Vertical + Horizontal

Multi motors make 3 independent controls

3D AUTO is one touch programmed and multi motors make three independent air flow controls.
The uniform and quiet airflow can be delivered to every corner of the room, achieving economical operation and minimizing energy loss.

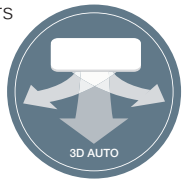

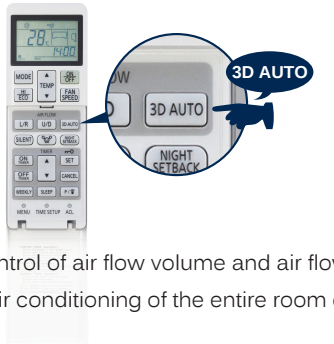

Thanks to automatic control of air flow volume and air flow direction, comfortable air conditioning of the entire room can be done effectively.
The cooled air flows directly to the ceiling in cooling operation mode, not directly at the occupants of the room. Comfort cooled air flow comes via the ceiling like a cool breeze.
In the heating mode, warm air flow can be sent down to the floor directly. The warm air then spreads along the floor achieving optimum comfort.

Programmed 3D AUTO

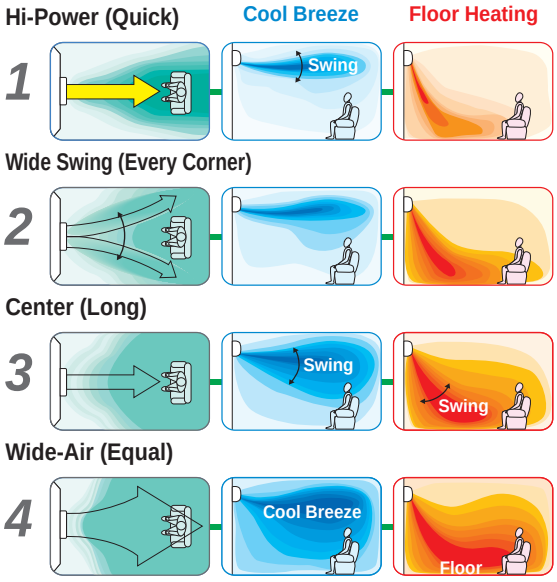

Horizontal swings in 8 directions

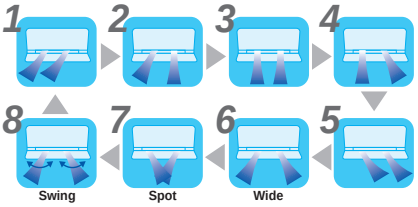

The airflow direction from the right and left louvers can be controlled individually. Eight different air flow patterns can be selected.

* This page is mainly described ZSX series.

CLEAN AIR

This is the original and only technology to control the temperature and humidity for inactivating allergens

Allergen Clear Operation

This can be activated by pressing the “allergen” button on the remote control and lasts 90 minutes before stopping automatically. It neutralizes all the bacteria collected on the surface of the anti-allergenic filter thanks to its sophisticated interaction between temperature and humidity controls.

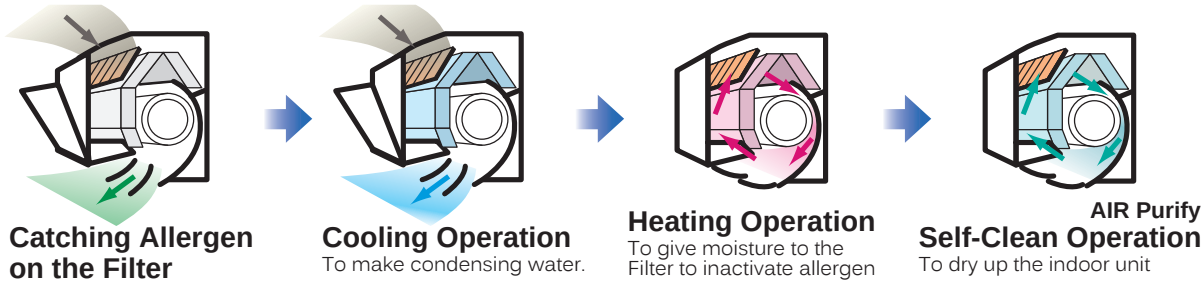

Self Clean Operation

Self clean operation is operated for 2 hours after the unit has stopped its normal operation.
The indoor unit is dried up and the growth of mold is restrained.
Users can select whether this mode is utilized or not.

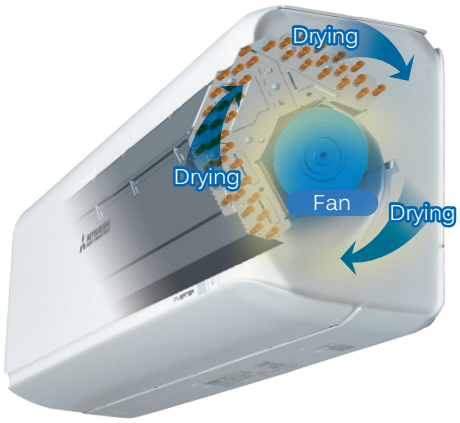

Situation of mold after one week

When you don’t execute “Self Clean Operation”

Fungal mycelia expand.

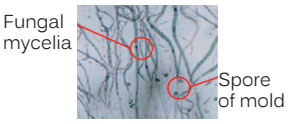

When you execute “Self Clean Operation”

The spore of mold doesn’t germinate.

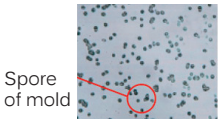

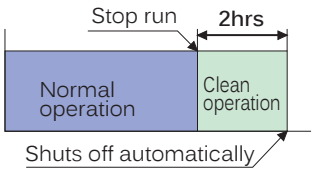

Allergen Clear Filter

Enzyme + Urea deactivates allergens and bacteria.

The allergen clear filter breaks down the pollen[*1], lice[*1], and allergens that live on cat skins, etc. and deactivates them. The secret of deactivation is the Enzyme-urea compound. It deactivates not only allergens but also all kinds of bacteria[*2], molds and viruses[*3]. Even if allergens and bacteria, etc. fly of the filter, they are deactivated, so the air in your room is kept fresh.

*1 Test method:
ELISA colorimetric method Laboratory:
Independent administrative agency national hospital mechanism Sagamihara Hospital, No.1536

*2 Test method:
ELISA colorimetric method / ELISA fluorescent method Laboratory:
Independent administrative agency national hospital mechanism Sagamihara Hospital, No.1536

*3 Test method:
TCID (Infection value 50%) Laboratory:
Foundation of Kitazato Environmental Science Center, No.15-0145

Structure of Preventing Dirt

Always keeping the indoor unit clean

The fan has undergone anti-microbial treatment to resist mold and germs, making the system clean and safe. Foul odours and molds, etc. which can occur when an air conditioning system is not in operation are prevented.

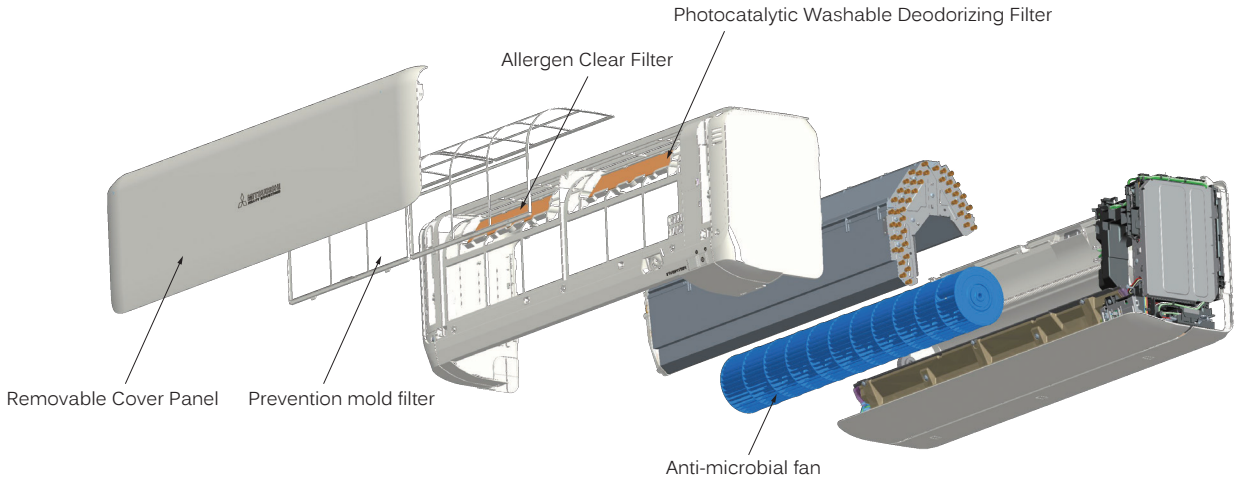

● **Aspergilus niger IFO6341**

Testing Authority:Japan Food Analysis Center

Test Report No.: 104034022-002
Tests were conducted with reference to the antimicrobial strength tests in JIS Z 2801 "Antimicrobial Products-Antimicrobial Test Method" –5.2 Antimicrobial Effects: Test Methods for Plastic Products, etc.

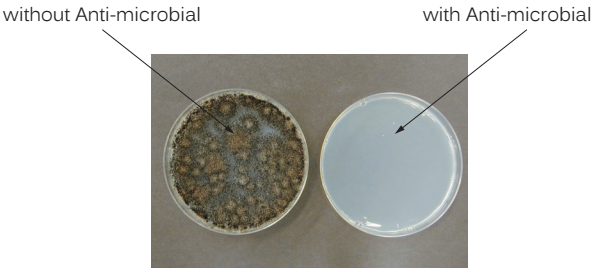

Comparison of growth of bacteria and mold on fan surfaces (microscopic image)

In tests conducted at the Mitsubishi Heavy Industries Nagoya Research Lab, 24 hours after contact with bacteria, cultured on agar media.

Photocatalytic Washable Deodorizing Filter

It will keep the air fresh by deodorizing the molecules causing odour. Its deodorizing power can be restored by washing with water and drying under the sun, as such it is a Recycling deodorizing filter capable of repeat use.

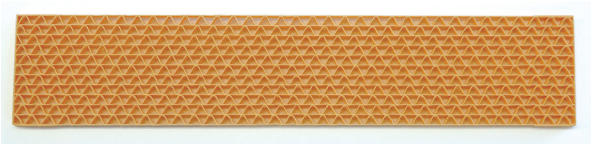

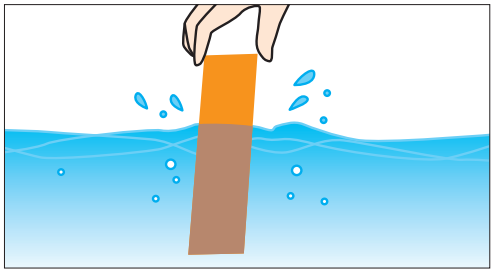

Used in models

Filter \ Indoor Unit	SRK-ZSX	SRK-ZR	SRK-ZS
Allergen Clear Filter	1pc	1pc	1pc
Photocatalytic Washable Deodorizing Filter	1pc	1pc	1pc

* This page is mainly described ZSX series.

ENERGY SAVING

In a cooling operation

It is set to moderate operation when there is little movement in the room.

In a heating operation

It is set to moderate operation when there is a lot of movement in the room.

Eco Operation

Automatic energy saving control is done by detecting human acitivity.
Human activity is detected by motion sensor which is installed in the unit. Air conditioner adjust its cooling/heating capacity according to low/high demand.
Economy Cooling operation, Air conditioner controls its capacity lower and goes into energy saving control when low activity is detected.
Economy Heating operation, Air conditioner controls its capacity lower and goes into energy saving control when high activity is detected.
When the sensor detects that no people are present in the room, the unit will automatically reduce the power used to a moderate level after approximately 15 minutes and return to normal operation once people return to the room.

Auto Off

Air conditioner stop operation and goes to “stand-by” mode after 1-hour absence. It turns ON again when human activity is detected within 12-hour,or turned OFF after 12-hour absence. *Can also be set to turn OFF after two hours.

Absent

It suppresses the power when there is nobody present in the room.

After 1-hour

You do not need to worry, even if you forget to turn off the power. Air-conditioner keeps stop until human activity is detected.

Come back to room

Automatically operates in the preset mode if you return to the room in twelve hours.

Fuzzy Auto Mode

The temperature and humidity sensors check room conditions.
The unit automatically controls the operation mode and the setting temperature to operate efficiently.
Operation mode and cooling/heating capacity is controlled automatically according to one setting tempertature.
Fuzzy auto mode offers automatic comfort temperature control even if weather condition changes quickly.

COMFORT & CONVENIENCE

High Power Operation

In a cooling operation

This operation mode delivers powerful cool air to cool the room quickly.
It blows powerful cool air when you want to be cooled down after bathing or returning home on a hot summer day so that you can enjoy a cool sensation immediately.
The air conditioner automatically returns to the previous operation mode in 15 minutes to prevent the room from being cooled excessively.

In a heating operation

This operation mode warms the whole room from the vicinity of the air conditioner to your feet.
It warms up the room promptly when you want to be warmed such as getting out of bed or returning home during the winter seasons. The air conditioner automatically returns to the previous operation mode in 15 minutes to prevent the room from being warmed excessively.

Silent Operation

When Silent operation is set, the maximum pressure level of the outdoor unit will be 3dB(A) lower than standard nominal level (45dB(A) or less).
The compressor speed is set at a lower range than that of nominal operation, operating at 60% of nominal capacity.
Maximum fan speed of outdoor unit is set lower than nominal operation.

Night Setback

During cold seasons, room temperatures can be maintained at a comfortable level even while the room is unattended.
The air conditioner keeps the temperature at 10°C.

* This page is mainly described ZSX series.

COMFORT & CONVENIENCE

Weekly Timer

Up to 4 programs with timer operation (ON-TIMER / OFF-TIMER) are available for each day of the week.
Maximum 28 programs per week can be set.
Once set, the timer operation will repeat the same program every week unless otherwise canceled.

Sleep Timer

Too much cooling/heating is not necessary when people go to sleep. This function achieves moderate cooling/heating by adjusting its capacity and more energy saving as well.

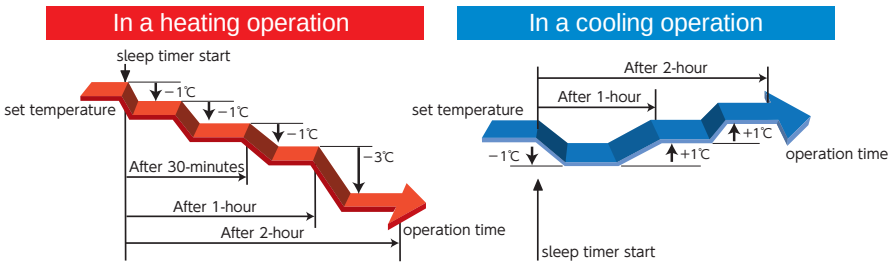

Comfort start-up

Air conditioner controls room temperature to achieve confort at the “set time” by 60-minutes pre-operation. This is convenient when you wake up and return home at a predetermined time. In ON-TIMER operation, the unit starts the operation a little earlier, so that the room can approach optimum temperature at ON time.

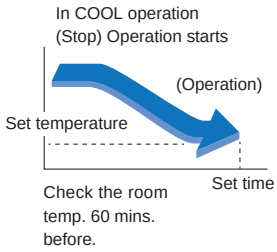

Preset Operation

The Preset Operation features allows customised temperature and airflow settings, which will deliver ultimate comfort with one simple touch of the button. (Applied for ZSX & ZS series)

LED Brightness Adjustment

Brightness of the LED display can be adjusted to suit. (Applied for ZSX & ZS series)

Easy to Remote control

The wall mounted unit comes with a wireless infra-red remote controller which is used to control the unit’s settings such as temperature, fan speed, heating or cooling mode.
The controller has a user-friendly design with large buttons. There are many key benefits such as eco-mode settings, which allow energy to be saved. There is also a weekly timer which can be set to your own parameters and when required for your convenience. There is also a silent mode option, which can be selected when going to sleep so there are minimal noise levels.

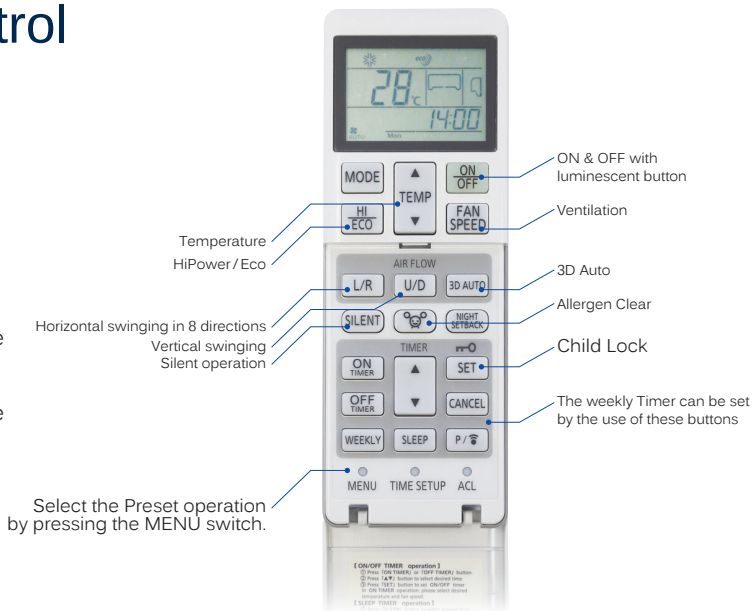

Wide Range of Operation

Our new advanced technology has expanded the heating and cooling operation range.
This permits installation of the units considering a heating and cooling operation under a low temperature condition down to –20°C. (ZSX series)

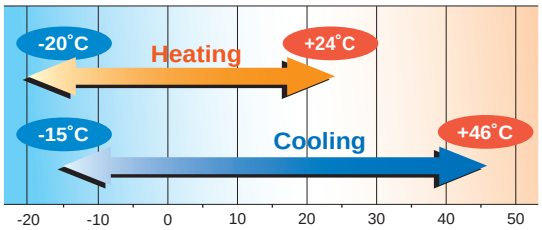

* For the capacities under low temperature conditions, refer to technical manual.

Long Piping Length

ZSX series supports a piping length of up to 30m to give design flexibility.

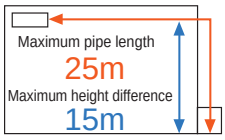

20~35ZSX

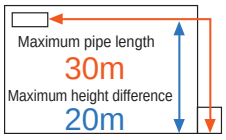

50·60ZSX

Installation of air-conditioners for a three-story house is available with long piping length

Suitable installation space can be found easily for outdoor units with long piping length.
As one outdoor unit is necessary for a three-story house the space required for installation is relatively small so the unit can be obscured in place.
Indoor units can be installed far apart such as on the first floor and as well as the third floor.

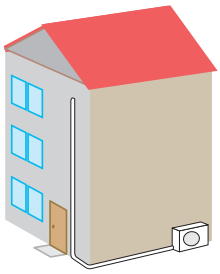

< EU/EEA market only >

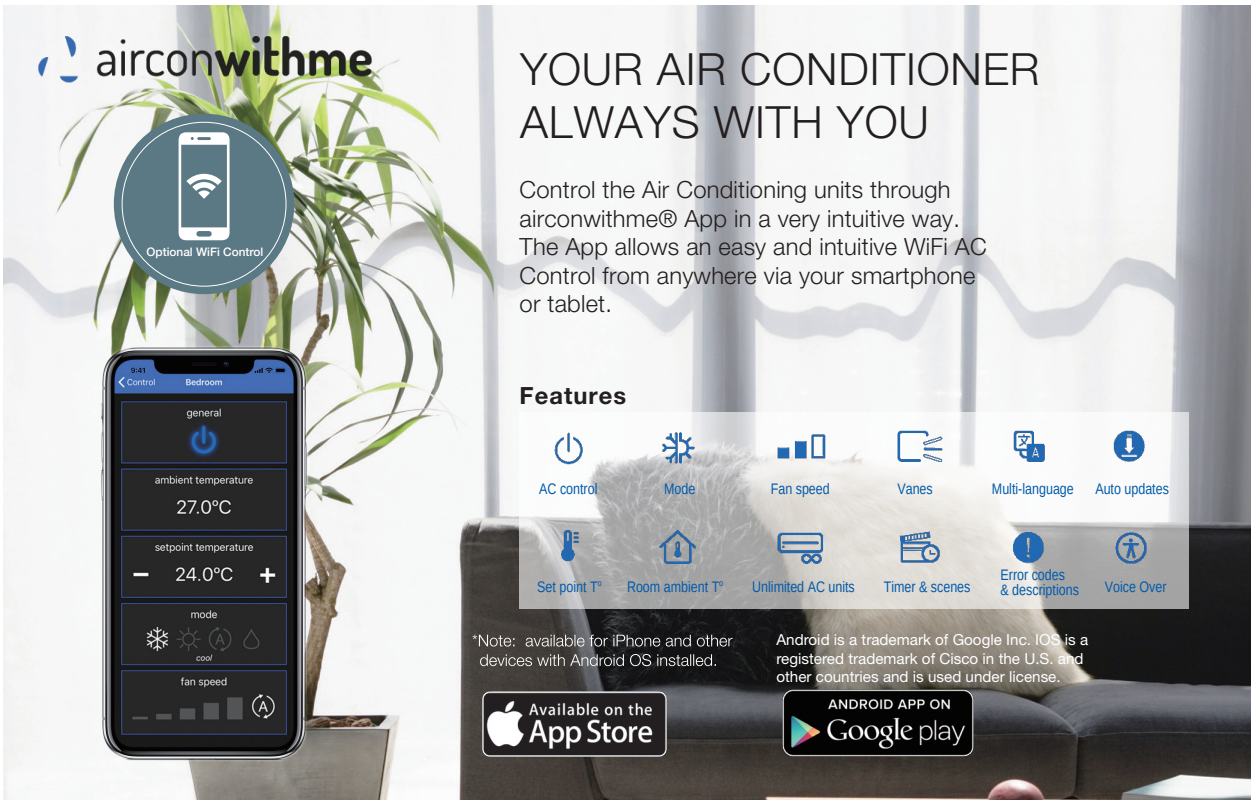

airconwithme Wifi Adaptors

Model : AM-MHI-01

Please access the followings for details.
URL http://www.airconwithme.com
email info@ airconwithme.com

* These are developed by Intesis.

* This page is mainly described ZSX series.

FUNCTIONS

Energy saving

Fuzzy Auto Mode
Using fuzzy logic algorithms, the unit determines the operating mode and temperature settings automatically and adjusts the inverter frequency.

Motion Sensor
This sensor detects human activity and shifts the temperature setting according to the amount of activity in the room.

Eco Operation
Room temperature and humidity are monitored using a sensor to automatically control the operation. In tandem with the motion sensor, the system enables an energy saving mode while maintaining comfort.

Auto Off
Stops the operation automatically when there is no activity detected in the room for a certain period of time.

Economy Mode
The unit will operate in energy saving mode in order to avoid excessive heating and cooling.

Air flow

Jet Air Technology
Air flow is regulated using the same blade technology as that in jet engines which produces a powerful yet efficient air flow.

3D Auto
This one touch program will activate the three independent motors to evenly distribute air flow and create optimum heating and cooling conditions.

Auto Flap Mode
Depending on the operating mode, the unit will automatically set the position of the louvers at the optimal angle.

Memory Louver
While the louver is swinging it can be stopped at any angle. On the next start-up the louver returns to the same positron that it was when the operation last stopped.

Up/Down Flap Swing
Louvers swing up and down continuously and can be set at a fixed angle.

Right/Left Louver Swing
Louvers swing right and left continuously and can be set at a fixed angle.

Air Outlet Selection
The unit has an upper and a lower outlet. This function allows you to select only the upper outlet, or the upper and lower outlets together.

Positioning of Installation
This allows you to manually set the air flow direction when the unit is installed against a wall.

Clean Operation & Filter

Allergen Clear Operation
The system is equipped to suppress the influence of the allergens caught by the Allergen Clear Filter by controlling the temperature and humidity. Enzymes are used to suppress the influence of the allergens caught during everyday operation.

Self-Clean Operation
Self clean mode dries the indoor unit and filter, preventing the growth of mould. This runs for 2hours after the unit has been switched off.

Allergen Clear Filter
The filter breaks down the pollen, lice, and all allergens that live on cat skins, etc. and deactivates them.

Photocatalytic Washable Deodorizing Filter
This easy to clean filter that catches airborne allergens and particles before neutralising odour causing bacteria within them.

Removable Cover Panel
With an easy to remove front panel, cleaning and maintenance of the indoor unit is quicker and easier than ever.

Comfort & Convenience

Dry Operation
During dry operation the unit will act as a dehumidifier to remove moisture from the air.

High Power Operation
Use the high power function to quickly reach your optimum temperature level when you first turn on the unit. This function will operate for a maximum of 15 minutes before returning to normal operation.

Silent Operation
This function allows you to program periods where the unit will operate with reduced noise levels and is ideal for temperature control during the night.

Night Setback
Designed for cold season, this ensures the room temperature is kept at around 10℃, even while unoccupied.

Weekly Timer
Set your unit to turn on and off automatically on a weekly basis to suit your usual room usage on each day.

24-hour On/Off Programmable Timer
By combining a start timer with a stop timer, you can register two timer operations a day. Once set, timers will faithfully start or stop the system at a specified time of the day repeatedly.

Sleep Timer
The room temperature is automatically controlled during the set sleep mode period, ensuring that room temperature will not get too cold or too hot. Set a predetermined amount of time between 30 and 240 minutes that your unit will operate for before switching off.

On/Off Timer
This timer allows the unit to be set to turn ON or OFF automatically once within a 24 hour period.

Comfort Start-up
With the ON-TIMER function, the unit will switch on earlier than the SET time, to ensure the optimum temperature is reached at the ON TIME.

Preset Operation
The desired preset operation mode can be enabled with a single touch of a button.

Child Lock
Lock the remote control to prevent little ones from tampering with the remote control.

LED Brightness Adjustment
The unit has an adjustable LED brightness display for minimal disturbance during night operation.

Others

Microcomputer-Operated Defrosting
This mode is automatically activated during low ambient temperatures to prevent the frosting of the outdoor heat exchanger and maintains heating efficiency.

Self-Diagnostic Function
In the unlikely event that the unit has a fault, the microprocessor will run a self-diagnosis function to determine the cause.

Auto Restart Function
If there is a temporary loss of power, when power is restored, the unit will automatically restart in the same operating mode it was in.

Back-up Switch
If the remote control fails, the unit can be operated via an on/off switch on the indoor unit.

		ZSX	ZR	ZS	ZSP	SRF	SRR	FDTC*3	SKM	FDUM*3	FDE*3
Energy saving	Fuzzy Auto Mode	●	●	●	●	●	●	●	●	●	●
	Motion Sensor	●									
	Eco Operation	●									
	Auto Off	●									
	Economy Mode		●	●	●	●	●		●		
Air flow	Jet Air Technology	●	●	●	●				●		
	3D Auto	●	●	●							
	Auto Flap Mode	●	●	●	●	●		●	●		●
	Memory Louver	●	●	●	●	●		●	●		●
	Up/down Flap Swing	●	●	●	●	●		●	●		●
	Right/Left Louver Swing	●	●	●							
	Air Outlet Selection					●					
	Positioning of Installation	●	●	●							
Clean operation & Filter	Allergen Clear Operation*1	●	●	●							
	Self Clean Operation	●	●	●	●	●	●		●		
	Allergen Clear Filter	●	●	●		●					
	Photocatalytic Washable Deodorizing Filter	●	●	●		●					
	Removable Cover Panel	●	●	●	●	●					
Comfort & Convenience	Dry Operation	●	●	●	●	●	●	●	●	●	●
	High Power Operation	●	●	●	●	●	●	●	●	●	●
	Silent Operation*2	●	●	●		●	●				
	Night Setback	●	●	●		●	●				
	Weekly Timer	●	●	●		●	●				
	24-hour On/Off Programmable Timer				●			●	●	●	●
	Sleep Timer	●	●	●	●	●	●		●		
	On/Off Timer	●	●	●	●	●	●	●	●	●	●
	Comfort Start-up	●	●	●	●	●	●		●		
	Preset Operation	●		●							
	Child Lock	●	●	●		●	●				
	LED Brightness Adjustment	●		●							
Others	Microcomputer-Operated Defrosting	●	●	●	●	●	●	●	●	●	●
	Self-Diagnostic Function	●	●	●	●	●	●	●	●	●	●
	Auto Restart Function	●	●	●	●	●	●	●	●	●	●
	Back-up Switch	●	●	●	●	●	●	●	●		●

*1 In case of Multi-split system, is not available. *2 It can not be used for Multi split systems. However, it can be available when connected to SCM50ZS-S1, SCM60-80ZM-S1. *3 When using Wireless remote contorol.

R32

SINGLE-SPLIT WALL MOUNTED TYPE

Diamond Series

SRK-ZSX-W

SRK20ZSX-W, SRK25ZSX-W, SRK35ZSX-W
SRK50ZSX-W, SRK60ZSX-W

Pure White(-W)

R32 R410A

SRK-ZSX-W series can be selected for use both R32 and R410A outdoor unit.

Single Multi

SRK-ZSX-W series can be selected for use as indoor units in the combination with SCM Multi system outdoor unit.

Wireless remote control

SRC20ZSX-W, SRC25ZSX-W, SRC35ZSX-W, SRC50ZSX-W1, SRC60ZSX-W1

A'DESIGN AWARD WINNER 2017 SILVER

FUNCTIONS

Energy saving

Air flow

Clean operation & Filter

Comfort & Convenience

Others

SPECIFICATIONS

Indoor unit				SRK20ZSX-W,-WB,-WT	SRK25ZSX-W,-WB,-WT	SRK35ZSX-W,-WB,-WT	SRK50ZSX-W,-WB,-WT	SRK60ZSX-W,-WB,-WT
Outdoor unit				SRC20ZSX-W	SRC25ZSX-W	SRC35ZSX-W	SRC50ZSX-W1	SRC60ZSX-W1
Power source				1Phase, 220 - 240, 50Hz				
Nominal cooling capacity (Min~Max)			kW	2.0 (0.9~3.4)	2.5 (0.9~3.8)	3.5 (0.9~4.5)	5.0 (1.0~6.2)	6.1 (1.0~6.9)
Nominal heating capacity (Min~Max)			kW	2.7 (0.8~5.5)	3.2 (0.8~6.0)	4.3 (0.8~6.8)	6.0 (0.8~8.2)	6.8 (0.8~8.8)
Power consumption		Cooling/Heating	kW	0.31 / 0.47	0.44 / 0.59	0.74 / 0.90	1.24 / 1.36	1.71 / 1.65
EER/COP		Cooling/Heating		6.45 / 5.74	5.68 / 5.42	4.73 / 4.78	4.03 / 4.41	3.57 / 4.12
Max. running current			A	9	9	9	15	15
Sound power level	Indoor	Cooling/Heating	dB(A)	53 / 55	55 / 56	58 / 58	59 / 62	62 / 63
	Outdoor	Cooling/Heating		56 / 58	57 / 58	61 / 62	63 / 61	65 / 64
Sound pressure level	Indoor	Cooling (Hi/Me/Lo/Ulo)		38 / 31 / 24 / 19	39 / 33 / 25 / 19	43 / 35 / 26 / 19	44 / 39 / 31 / 22	48 / 41 / 33 / 22
		Heating (Hi/Me/Lo/Ulo)		38 / 33 / 25 / 19	40 / 34 / 27 / 19	42 / 35 / 28 / 19	47 / 41 / 33 / 23	47 / 42 / 34 / 23
	Outdoor	Cooling/Heating		43 / 45	44 / 45	48 / 47	51 / 49	52 / 53
Air flow	Indoor	Cooling (Hi/Me/Lo/Ulo)	m^3/min	11.3 / 9.1 / 6.0 / 5.0	12.2 / 10.0 / 6.7 / 5.0	13.1 / 10.8 / 7.3 / 5.0	14.3 / 12.4 / 7.8 / 5.4	16.3 / 13.4 / 8.9 / 5.4
		Heating (Hi/Me/Lo/Ulo)		12.2 / 10.3 / 7.2 / 5.4	12.8 / 11.0 / 7.8 / 5.4	13.9 / 11.8 / 8.6 / 5.4	17.3 / 14.3 / 9.8 / 6.2	17.8 / 13.7 / 10.9 / 6.2
	Outdoor	Cooling/Heating		31.0 / 31.0	31.0 / 31.0	36.0 / 31.0	39.0 / 33.0	41.5 / 39.0
Exterior dimensions	Indoor	HeightxWidthxDepth	mm	305 x 920 x 220				
	Outdoor			640 x 800(+71) x 290				
Net weight	Indoor / Outdoor		kg	13.0 / 43.0			13.0 / 45.0	
Refrigerant		Type/GWP		R32 / 675				
		Charge	kg/TCO₂Eq	1.20 / 0.810			1.30 / 0.878	
Refrigerant piping size		Liquid/Gas	ø mm	6.35(1/4") / 9.52(3/8")			6.35(1/4") / 12.7(1/2")	
Refrigerant line (one way) length			m	Max.25			Max.30	
Vertical height differences		Outdoor is higher/lower	m	Max.15 / Max.15			Max.20 / Max.20	
Outdoor operating temperature range		Cooling	˚C	-15~46				
		Heating		-20~24				
Clean filter				Allergen Clear Filter x 1, Photocatalytic Washable Deodorizing Filter x 1				

- The data are measured under the following conditions(ISO-T1, H1). Cooling: Indoor temp. of 27˚CDB, 19˚CWB, and outdoor temp. of 35˚CDB. Heating: Indoor temp. of 20˚CDB, and outdoor temp. of 7˚CDB, 6˚CWB.
- Sound level indicates the value in an anechoic chamber.During operation these values are somewhat higher due to ambient conditions.
- 'tonne(s) of CO_2 equivalent' means a quantity of greenhouse gases- expressed as the product of the weight of the greenhouse gases in metric tonnes and of their global warming potential.

Mitsubishi Heavy Industries latest technology offers high seasonal efficiency

The new ZSX series meets outstanding energy efficiency receiving Europe's highest seasonal energy rating (A+++).

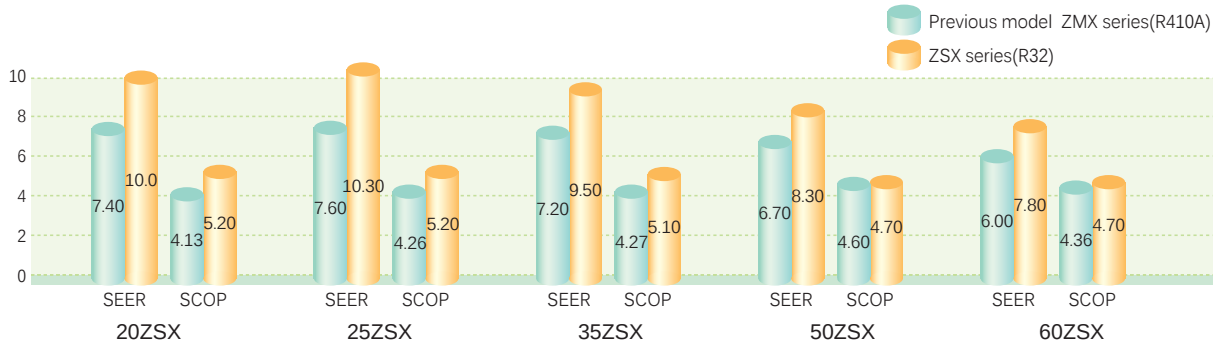

- SEER and SCOP is defined in European regulations. Please refer to P82

Low Global Warming Potential (GWP) and High energy efficiency by new refrigerant R32

The benefits of R32 GAS

- R32 has a GWP of 675, 68% less than R410A gas with GWP 2088.
- It requires 20% less charge compared to R410A gas.
- It provides 3% to 5% more energy efficiency compared to R410A gas.
- It complies F-gas phasedown.

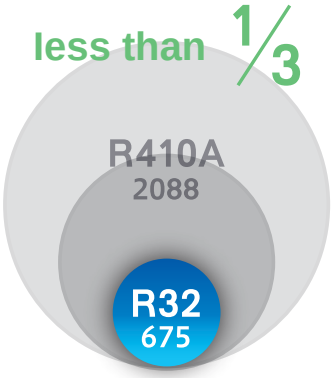

Colour variation available

User can choose the model from three different colours allowing more choice depending on the style of the room.

R32

SINGLE-SPLIT WALL MOUNTED TYPE

Premium Series

SRK-ZS-W

NEW

Pure White(-W)

SRK20ZS-W, SRK25ZS-W, SRK35ZS-W, SRK50ZS-W

R32 R410A — SRK-ZS-W series can be selected for use both R32 and R410A outdoor unit.

Single Multi — SRK-ZS-W series can be selected for use as indoor units in the combination with SCM Multi system outdoor unit.

Wireless remote control

SRC20ZS-W, SRC25ZS-W SRC35ZS-W

SRC50ZS-W

FUNCTIONS

Energy saving

Air flow

Clean operation & Filter

Comfort & Convenience

Others

SPECIFICATIONS

Indoor unit				SRK20ZS-W,-WB,-WT	SRK25ZS-W,-WB,-WT	SRK35ZS-W,-WB,-WT	SRK50ZS-W,-WB,-WT
Outdoor unit				SRC20ZS-W	SRC25ZS-W	SRC35ZS-W	SRC50ZS-W
Power source				1 Phase, 220 - 240V, 50Hz			
Nominal cooling capacity (Min~Max)			kW	2.0(0.9~2.9)	2.5(0.9~3.1)	3.5(0.9~4.0)	5.0(1.3~5.5)
Nominal heating capacity (Min~Max)			kW	2.7(0.9~4.3)	3.2(0.9~4.5)	4.0(0.9~5.0)	5.8(1.3~6.6)
Power consumption		Cooling/Heating	kW	0.44 / 0.59	0.62 / 0.74	0.89 / 0.94	1.35 / 1.56
EER/COP		Cooling/Heating		4.55 / 4.58	4.03 / 4.32	3.93 / 4.26	3.70 / 3.72
Max. running current			A	9	9	9	14.5
Sound power level	Indoor	Cooling/Heating	dB(A)	48 / 50	50 / 53	54 / 56	59 / 60
	Outdoor	Cooling/Heating		56 / 56	56 / 58	61 / 61	61 / 63
Sound pressure level	Indoor	Cooling (Hi/Me/Lo/Ulo)		34 / 25 / 22 / 19	36 / 28 / 23 / 19	40 / 30 / 26 / 19	46 / 36 / 29 / 22
		Heating (Hi/Me/Lo/Ulo)		36 / 29 / 23 / 19	39 / 30 / 24 / 19	41 / 36 / 25 / 19	46 / 37 / 31 / 24
	Outdoor	Cooling/Heating		45 / 45	46 / 46	50 / 48	51 / 52
Air flow	Indoor	Cooling (Hi/Me/Lo/Ulo)	m^3/min	9.3 / 7.0 / 5.9 / 5.0	9.9 / 8.0 / 5.9 / 5.0	11.3 / 8.7 / 7.0 / 5.0	12.1 / 9.9 / 7.4 / 5.9
		Heating (Hi/Me/Lo/Ulo)		10.0 / 8.5 / 6.5 / 5.9	11.3 / 8.7 / 6.7 / 5.9	12.3 / 11.0 / 7.0 / 5.6	13.9 / 11.2 / 9.1 / 7.4
	Outdoor	Cooling/Heating		27.4 / 23.6	27.4 / 23.6	31.5 / 27.8	32.8 / 32.8
Exterior dimensions	Indoor	HeightxWidthxDepth	mm	290 x 870 x 230			
	Outdoor			540 x 780(+62) x 290			595 x 780(+62) x 290
Net weight	Indoor / Outdoor		kg	9.5 / 31.0		9.5 / 34.5	10.0 / 36.0
Refrigerant		Type/GWP		R32 / 675			
		Charge	kg/TCO_2Eq	0.62 / 0.419		0.78 / 0.527	1.05 / 0.709
Refrigerant piping size		Liquid/Gas	ø mm	6.35(1/4") / 9.52(3/8")			6.35(1/4") / 12.7(1/2")
Refrigerant line (one way) length			m	Max. 20			Max. 25
Vertical height differences		Outdoor is higher/lower	m	Max. 10 / Max. 10			Max. 15 / Max. 15
Outdoor operating temperature range		Cooling	˚C	-15~46			
		Heating		-15~24			
Clean filter				Allergen Clear Filter x 1, Photocatalytic Washable Deodorizing Filter x 1			

- The data are measured under the following conditions(ISO-T1, H1). Cooling: Indoor temp. of 27˚CDB, 19˚CWB, and outdoor temp. of 35˚CDB. Heating: Indoor temp. of 20˚CDB, and outdoor temp. of 7˚CDB, 6˚CWB.
- Sound level indicates the value in an anechoic chamber. During operation these values are somewhat higher due to ambient conditions.
- 'tonne(s) of CO_2 equivalent' means a quantity of greenhouse gases- expressed as the product of the weight of the greenhouse gases in metric tonnes and of their global warming potential.

Low Global Warming Potential (GWP) and High energy efficiency by new refrigerant R32

The benefits of R32 GAS

- R32 has a GWP of 675, 68% less than R410A gas with GWP 2088.
- It requires 20% less charge compared to R410A gas.
- It provides 3% to 5% more energy efficiency compared to R410A gas.
- It complies F-gas phasedown.

Elegant Timeless Design

Unification of the design between ZSX and ZS series. Users can choose their favorite colour from three choices.

Black & White (-WB)

Titanium (-WT)

R32

SINGLE-SPLIT WALL MOUNTED TYPE

Diamond Series

SRK-ZR-W

NEW

SRK63ZR-W, SRK71ZR-W, SRK80ZR-W

R32 R410A — SRK-ZR-W series can be selected for use both R32 and R410A outdoor unit.

Single Multi — SRK71ZR-W can be selected for use as indoor units in the combination with SCM Multi system outdoor unit.

Wireless remote control

SRC63ZR-W

SRC71ZR-W, SRC80ZR-W

FUNCTIONS

Energy saving

Air flow

Clean operation & Filter

Comfort & Convenience

Others

SPECIFICATIONS

Indoor unit				SRK63ZR-W	SRK71ZR-W	SRK80ZR-W
Outdoor unit				SRC63ZR-W	SRC71ZR-W	SRC80ZR-W
Power source				1 Phase, 220 - 240V, 50Hz		
Nominal cooling capacity (Min~Max)			kW	6.3 (1.2~7.4)	7.1 (2.3~7.8)	8.0 (2.3~9.7)
Nominal heating capacity (Min~Max)			kW	7.1 (0.8~9.3)	8.0 (2.0~10.8)	9.0 (2.1~11.2)
Power consumption		Cooling/Heating	kW	1.63 / 1.64	1.93 / 1.95	2.09 / 2.27
EER/COP		Cooling/Heating		3.87 / 4.33	3.68 / 4.10	3.83 / 3.96
Max. running current			A	14.5	17	17
Sound power level	Indoor	Cooling/Heating	dB(A)	56 / 58	57 / 60	60 / 62
	Outdoor	Cooling/Heating		64 / 65	63 / 63	67 / 67
Sound pressure level	Indoor	Cooling (Hi/Me/Lo/Ulo)		44 / 39 / 35 / 25	44 / 41 / 37 / 25	47 / 44 / 39 / 26
		Heating (Hi/Me/Lo/Ulo)		44 / 38 / 34 / 28	46 / 39 / 35 / 28	47 / 41 / 36 / 29
	Outdoor	Cooling/Heating		54 / 54	53 / 51	56 / 55
Air flow	Indoor	Cooling (Hi/Me/Lo/Ulo)	m^3/min	20.5 / 18.1 / 15.7 / 10.4	20.5 / 18.6 / 16.2 / 10.4	23.5 / 20.2 / 17.5 / 10.4
		Heating (Hi/Me/Lo/Ulo)		22.5 / 19.0 / 16.5 / 13.1	25.0 / 19.8 / 17.3 / 13.3	26.5 / 21.3 / 18.4 / 13.5
	Outdoor	Cooling/Heating		41.5 / 41.5	55 / 43.5	63 / 49.5
Exterior dimensions	Indoor	HeightxWidthxDepth	mm	339 x 1197 x 262		
	Outdoor			640 x 800(+71) x 290	750 x 880(+88) x 340	
Net weight	Indoor / Outdoor		kg	15.5 / 45.0	15.5 / 56.0	16.5 / 57.0
Refrigerant		Type/GWP		R32 / 675		
		Charge	kg/TCO_2Eq	1.25 / 0.844	1.5 / 1.013	1.6 / 1.080
Refrigerant piping size		Liquid/Gas	ø mm	6.35(1/4") / 12.7(1/2")	6.35(1/4") / 15.88(5/8")	
Refrigerant line (one way) length			m	Max.30		
Vertical height differences		Outdoor is higher/lower	m	Max.20 / Max.20		
Outdoor operating temperature range		Cooling	˚C	-15~46		
		Heating		-15~24		
Clean filter				Allergen Clear Filter x 1, Photocatalytic Washable Deodorizing Filter x 1		

- The data are measured under the following conditions(ISO-T1, H1). Cooling: Indoor temp. of 27˚CDB, 19˚CWB, and outdoor temp. of 35˚CDB. Heating: Indoor temp. of 20˚CDB, and outdoor temp. of 7˚CDB, 6˚CWB.
- Sound level indicates the value in an anechoic chamber. During operation these values are somewhat higher due to ambient conditions.
- 'tonne(s) of CO_2 equivalent' means a quantity of greenhouse gases- expressed as the product of the weight of the greenhouse gases in metric tonnes and of their global warming potential.

SINGLE-SPLIT WALL MOUNTED TYPE

Standard Series

SRK-ZSP-W

NEW

SRK25ZSP-W, SRK35ZSP-W, SRK45ZSP-W

R32 R410A

SRK-ZSP-W series can be selected for use both R32 and R410A outdoor unit.

Wireless remote control

SRC25ZSP-W
SRC35ZSP-W

SRC45ZSP-W

Elegant Timeless Design

ZSP series is elegant design fits into any kind of interior decoration.

Energy Class Improvement

All class A++

Compact and Light weight

The SRK-ZSP-W series offers great installation flexibility.

FUNCTIONS

Energy saving

Air flow

Clean operation & Filter

Comfort & Convenience

Others

SPECIFICATIONS

Indoor unit				SRK25ZSP-W	SRK35ZSP-W	SRK45ZSP-W
Outdoor unit				SRC25ZSP-W	SRC35ZSP-W	SRC45ZSP-W
Power source				1 Phase, 220 - 240V, 50Hz		
Nominal cooling capacity (Min~Max)			kW	2.5(0.9~3.1)	3.2(0.9~3.7)	4.5(1.3~4.8)
Nominal heating capacity (Min~Max)			kW	2.8(1.0~4.1)	3.6(1.0~4.6)	5.0(1.2~5.8)
Power consumption		Cooling/Heating	kW	0.710 / 0.690	0.910 / 0.930	1.350 / 1.360
EER/COP		Cooling/Heating		3.52/4.05	3.52 / 3.87	3.33 / 3.68
Max. running current			A	9	9	14.5
Sound power level	Indoor	Cooling/Heating	dB(A)	57 / 57	58 / 58	56 / 62
	Outdoor	Cooling/Heating		57 / 56	59 / 60	63 / 64
Sound pressure level	Indoor	Cooling (Hi/Me/Lo)		45 / 34 / 23	45 / 36 / 23	44 / 39 / 24
		Heating (Hi/Me/Lo)		43 / 34 / 26	44 / 36 / 28	48 / 41 / 30
	Outdoor	Cooling/Heating		47 / 45	48 / 48	51 / 51
Air flow	Indoor	Cooling (Hi/Me/Lo)	m^3/min	10.0 / 7.3 / 4.2	9.5 / 6.8 / 4.2	9.0 / 7.2 / 3.8
		Heating (Hi/Me/Lo)		9.5 / 7.3 / 5.2	9.6 / 7.4 / 5.5	12.0 / 9.2 / 6.2
	Outdoor	Cooling/Heating		23.7 / 19.7	22.8 / 22.0	35.6 / 33.4
Exterior dimensions	Indoor	HeightxWidthxDepth	mm	267 x 783 x 210		
	Outdoor			540 x 645(+57) x 275		595 x 780(+62) x 290
Net weight	Indoor / Outdoor		kg	7.0 / 26.5	7.0 / 28.5	7.5 / 36.0
Refrigerant		Type/GWP		R32 / 675		
		Charge	kg/TCO_2Eq	0.550 / 0.371	0.68 / 0.459	1.10 / 0.743
Refrigerant piping size		Liquid/Gas	ø mm	6.35(1/4") / 9.52(3/8")		6.35(1/4") / 12.7(1/2")
Refrigerant line (one way) length			m	Max. 15		Max. 25
Vertical height differences		Outdoor is higher/lower	m	Max. 10 / Max. 10		Max. 15 / Max. 15
Outdoor operating temperature range		Cooling	˚C	-15~46		
		Heating		-15~24		
Clean filter				–		

- The data are measured under the following conditions(ISO-T1, H1). Cooling: Indoor temp. of 27˚CDB, 19˚CWB, and outdoor temp. of 35˚CDB. Heating: Indoor temp. of 20˚CDB, and outdoor temp. of 7˚CDB, 6˚CWB.
- Sound level indicates the value in an anechoic chamber. During operation these values are somewhat higher due to ambient conditions.
- 'tonne(s) of CO_2 equivalent' means a quantity of greenhouse gases- expressed as the product of the weight of the greenhouse gases in metric tonnes and of their global warming potential.

R410A

SINGLE-SPLIT WALL MOUNTED TYPE

Diamond Series

SRK-ZSX-S

SRK20ZSX-S, SRK25ZSX-S, SRK35ZSX-S
SRK50ZSX-S, SRK60ZSX-S

Single Multi

SRK-ZSX-S series can be selected for use as indoor units in the combination with SCM Multi system outdoor unit.

Wireless remote control

SRC20ZSX-S, SRC25ZSX-S, SRC35ZSX-S,
SRC50ZSX-S, SRC60ZSX-S

A'DESIGN AWARD WINNER 2017 SILVER

FUNCTIONS

Energy saving

Air flow

Clean operation & Filter

Comfort & Convenience

Others

SPECIFICATIONS

Indoor unit				SRK20ZSX-S	SRK25ZSX-S	SRK35ZSX-S	SRK50ZSX-S	SRK60ZSX-S
Outdoor unit				SRC20ZSX-S	SRC25ZSX-S	SRC35ZSX-S	SRC50ZSX-S	SRC60ZSX-S
Power source				1Phase, 220 - 240, 50Hz				
Nominal cooling capacity (Min~Max)			kW	2.0 (0.9~3.2)	2.5 (0.9~3.7)	3.5 (0.9~4.3)	5.0 (1.0~5.8)	6.1 (1.0~6.8)
Nominal heating capacity (Min~Max)			kW	2.7 (0.8~5.3)	3.2 (0.8~5.8)	4.3 (0.8~6.6)	6.0 (0.6~8.1)	6.8 (0.6~8.7)
Power consumption		Cooling/Heating	kW	0.32 / 0.47	0.44 / 0.59	0.78 / 0.90	1.30 / 1.36	1.81 / 1.67
EER/COP		Cooling/Heating		6.25 / 5.74	5.68 / 5.42	4.49 / 4.78	3.85 / 4.41	3.37 / 4.07
Max. running current			A	9	9	9	15	15
Sound power level	Indoor	Cooling/Heating	dB(A)	53 / 53	55 / 56	58 / 58	59 / 62	62 / 63
	Outdoor	Cooling/Heating		56 / 58	57 / 58	61 / 62	63 / 63	65 / 64
Sound pressure level	Indoor	Cooling (Hi/Me/Lo/Ulo)		38 / 31 / 24 / 19	39 / 33 / 25 / 19	43 / 35 / 26 / 19	44 / 39 / 31 / 22	46 / 41 / 33 / 22
		Heating (Hi/Me/Lo/Ulo)		38 / 32 / 25 / 19	40 / 34 / 27 / 19	41 / 35 / 28 / 19	46 / 41 / 33 / 23	46 / 42 / 34 / 23
	Outdoor	Cooling/Heating		43 / 44	44 / 45	48 / 47	50 / 49	52 / 52
Air flow	Indoor	Cooling (Hi/Me/Lo/Ulo)	m^3/min	11.3 / 9.1 / 6.0 / 5.0	12.2 / 10.0 / 6.7 / 5.0	13.1 / 10.8 / 7.3 / 5.0	14.3 / 12.4 / 7.8 / 5.4	16.3 / 13.4 / 8.9 / 5.4
		Heating (Hi/Me/Lo/Ulo)		12.2 / 10.3 / 7.2 / 5.4	12.8 / 11.0 / 7.8 / 5.4	13.9 / 11.8 / 8.6 / 5.4	17.3 / 14.3 / 9.8 / 6.2	17.8 / 13.7 / 10.9 / 6.2
	Outdoor	Cooling/Heating		31.0 / 31.0	31.0 / 31.0	36.0 / 31.0	39.0 / 33.0	41.5 / 39.0
Exterior dimensions	Indoor	HeightxWidthxDepth	mm	305 x 920 x 220				
	Outdoor			640 x 800(+71) x 290				
Net weight	Indoor / Outdoor		kg	13.0 / 43.0			13.0 / 45.0	
Refrigerant		Type/GWP		R410A / 2088				
		Charge	kg/TCO₂Eq	1.45 / 3.028			1.50 / 3.132	
Refrigerant piping size		Liquid/Gas	ø mm	6.35(1/4") / 9.52(3/8")			6.35(1/4") / 12.7(1/2")	
Refrigerant line (one way) length			m	Max.25			Max.30	
Vertical height differences		Outdoor is higher/lower	m	Max.15 / Max.15			Max.20 / Max.20	
Outdoor operating temperature range		Cooling	˚C	-15~46				
		Heating		-20~24				
Clean filter				Allergen Clear Filter x 1, Photocatalytic Washable Deodorizing Filter x 1				

- The data are measured under the following conditions(ISO-T1, H1). Cooling: Indoor temp. of 27˚CDB, 19˚CWB, and outdoor temp. of 35˚CDB. Heating: Indoor temp. of 20˚CDB, and outdoor temp. of 7˚CDB, 6˚CWB.
- Sound level indicates the value in an anechoic chamber.During operation these values are somewhat higher due to ambient conditions.
- 'tonne(s) of CO_2 equivalent' means a quantity of greenhouse gases- expressed as the product of the weight of the greenhouse gases in metric tonnes and of their global warming potential.

R410A

SINGLE-SPLIT WALL MOUNTED TYPE

Diamond Series

SRK-ZR-S

SRK63ZR-S, SRK71ZR-S, SRK80ZR-S, SRK100ZR-S

Single Multi

SRK71ZR-S can be selected for use as indoor units in the combination with SCM Multi system outdoor unit.

Wireless remote control

SRC63ZR-S

SRC71ZR-S, SRC80ZR-S

FDC100VNP

FUNCTIONS

Energy saving

Air flow

Clean operation & Filter

Comfort & Convenience

Others

SPECIFICATIONS

Indoor unit				SRK63ZR-S	SRK71ZR-S	SRK80ZR-S	SRK100ZR-S
Outdoor unit				SRC63ZR-S	SRC71ZR-S	SRC80ZR-S	FDC100VNP
Power source				1 Phase, 220 - 240V, 50Hz			
Nominal cooling capacity (Min~Max)			kW	6.3 (1.2~7.1)	7.1 (2.3~7.7)	8.0 (2.3~9.0)	10.0 (2.4~10.5)
Nominal heating capacity (Min~Max)			kW	7.1 (0.8~9.0)	8.0 (2.0~10.0)	9.0 (2.1~10.5)	11.2 (3.2~11.5)
Power consumption		Cooling/Heating	kW	1.85 / 1.74	2.05 / 2.06	2.35 / 2.40	3.09 / 3.28
EER/COP		Cooling/Heating		3.41 / 4.08	3.46 / 3.88	3.40 / 3.75	3.24 / 3.41
Max. running current			A	14.5	17	17	21
Sound power level	Indoor	Cooling/Heating	dB(A)	58 / 58	58 / 60	62 / 62	63 / 63
	Outdoor	Cooling/Heating		67 / 66	65 / 63	68 / 67	70 / 74
Sound pressure level	Indoor	Cooling (Hi/Me/Lo/Ulo)		44 / 39 / 35 / 25	44 / 41 / 37 / 25	47 / 44 / 39 / 26	48 / 45 / 40 / 27
		Heating (Hi/Me/Lo/Ulo)		44 / 38 / 34 / 28	46 / 39 / 35 / 28	47 / 41 / 36 / 29	48 / 43 / 38 / 30
	Outdoor	Cooling/Heating		54 / 54	53 / 51	56 / 55	57 / 61
Air flow	Indoor	Cooling (Hi/Me/Lo/Ulo)	m^3/min	20.5 / 18.1 / 15.7 / 10.4	20.5 / 18.6 / 16.2 / 10.4	23.5 / 20.2 / 17.5 / 10.4	24.5 / 21.3 / 17.6 / 10.4
		Heating (Hi/Me/Lo/Ulo)		23.5 / 19.0 / 16.5 / 13.1	25.5 / 19.8 / 17.3 / 13.3	26.5 / 21.3 / 18.4 / 13.5	27.5 / 23.2 / 19.1 / 13.6
	Outdoor	Cooling/Heating		41.5 / 41.5	55 / 43.5	63 / 49.5	75 / 80
Exterior dimensions	Indoor	HeightxWidthxDepth	mm	339 x 1197 x 262			
	Outdoor			640 x 800(+71) x 290	750 x 880(+88) x 340		845 x 970 x 370
Net weight	Indoor / Outdoor		kg	15.5 / 45.0	15.5 / 57.0	16.5 / 58.5	16.5 / 70.0
Refrigerant		Type/GWP		R410A / 2088			
		Charge	kg/TCO_2Eq	1.55 / 3.236	1.8 / 3.758	1.9 / 3.967	2.55 / 5.324
Refrigerant piping size		Liquid/Gas	ø mm	6.35(1/4") / 12.7(1/2")	6.35(1/4") / 15.88(5/8")		9.52(3/8") / 15.88(5/8")
Refrigerant line (one way) length			m	Max.30			
Vertical height differences		Outdoor is higher/lower	m	Max.20 / Max.20			
Outdoor operating temperature range		Cooling	˚C	-15~46			
		Heating		-15~24			
Clean filter				Allergen Clear Filter x 1, Photocatalytic Washable Deodorizing Filter x 1			

- The data are measured under the following conditions(ISO-T1, H1). Cooling: Indoor temp. of 27˚CDB, 19˚CWB, and outdoor temp. of 35˚CDB. Heating: Indoor temp. of 20˚CDB, and outdoor temp. of 7˚CDB, 6˚CWB.
- Sound level indicates the value in an anechoic chamber. During operation these values are somewhat higher due to ambient conditions.
- 'tonne(s) of CO_2 equivalent' means a quantity of greenhouse gases- expressed as the product of the weight of the greenhouse gases in metric tonnes and of their global warming potential.

R410A

SINGLE-SPLIT WALL MOUNTED TYPE

Premium Series

SRK-ZS-S

Pure White(-S)

SRK20ZS-S, SRK25ZS-S, SRK35ZS-S, SRK50ZS-S

Elegant Timeless Design

Unification of the design between ZSX and ZS series.
Users can choose their favorite colour from three choices.

Black & White (-SB)

Titanium (-ST)

Single Multi

SRK-ZS-S series can be selected for use as indoor units in the combination with SCM Multi system outdoor unit.

Wireless remote control

SRC20ZS-S, SRC25ZS-S SRC35ZS-S

SRC50ZS-S

FUNCTIONS

Energy saving

Air flow

Clean operation & Filter

Comfort & Convenience

Others

SPECIFICATIONS

Indoor unit				SRK20ZS-S,-SB,-ST	SRK25ZS-S,-SB,-ST	SRK35ZS-S,-SB,-ST	SRK50ZS-S,-SB,-ST
Outdoor unit				SRC20ZS-S	SRC25ZS-S	SRC35ZS-S	SRC50ZS-S
Power source				1 Phase, 220 - 240V, 50Hz			
Nominal cooling capacity (Min~Max)			kW	2.0(1.0~2.8)	2.5(1.0~3.0)	3.5(1.0~3.8)	5.0(1.7~5.5)
Nominal heating capacity (Min~Max)			kW	2.7(0.9~4.2)	3.2(0.9~4.4)	4.0(0.9~4.8)	5.8(1.6~6.6)
Power consumption		Cooling/Heating	kW	0.44 / 0.62	0.62 / 0.80	1.01 / 1.00	1.56 / 1.59
EER/COP		Cooling/Heating		4.55 / 4.35	4.03 / 4.00	3.47 / 4.00	3.21 / 3.65
Max. running current			A	9	9	9	14.5
Sound power level	Indoor	Cooling/Heating	dB(A)	50 / 52	52 / 55	56 / 58	58 / 59
	Outdoor	Cooling/Heating		57 / 57	58 / 58	62 / 61	62 / 63
Sound pressure level	Indoor	Cooling (Hi/Me/Lo/Ulo)		34 / 25 / 22 / 19	36 / 28 / 23 / 19	40 / 30 / 26 / 19	45 / 36 / 28 / 22
		Heating (Hi/Me/Lo/Ulo)		36 / 29 / 23 / 19	39 / 30 / 24 / 19	41 / 36 / 25 / 19	45 / 37 / 31 / 24
	Outdoor	Cooling/Heating		45 / 45	46 / 46	50 / 48	51 / 53
Air flow	Indoor	Cooling (Hi/Me/Lo/Ulo)	m^3/min	9.3 / 7.0 / 5.9 / 5.0	9.9 / 8.0 / 5.9 / 5.0	11.3 / 8.7 / 7.0 / 5.0	12.1 / 9.9 / 7.4 / 5.9
		Heating (Hi/Me/Lo/Ulo)		10.0 / 8.5 / 6.5 / 5.9	11.3 / 8.7 / 6.7 / 5.9	12.3 / 11.0 / 7.0 / 5.9	13.9 / 11.2 / 9.1 / 7.4
	Outdoor	Cooling/Heating		27.4 / 23.6	27.4 / 23.6	31.5 / 27.8	32.8 / 32.8
Exterior dimensions	Indoor	HeightxWidthxDepth	mm	290 x 870 x 230			
	Outdoor			540 x 780(+62) x 290			595 x 780(+62) x 290
Net weight	Indoor / Outdoor		kg	9.5 / 31.5		9.5 / 34.5	10.0 / 36.5
Refrigerant		Type/GWP		R410A / 2088			
		Charge	kg/TCO_2Eq	0.75 / 1.566		0.95 / 1.984	1.25 / 2.61
Refrigerant piping size		Liquid/Gas	ø mm	6.35(1/4") / 9.52(3/8")			6.35(1/4") / 12.7(1/2")
Refrigerant line (one way) length			m	Max. 20			Max. 25
Vertical height differences		Outdoor is higher/lower	m	Max. 10 / Max. 10			Max. 15 / Max. 15
Outdoor operating temperature range		Cooling	˚C	-15~46			
		Heating		-15~24			
Clean filter				Allergen Clear Filter x 1, Photocatalytic Washable Deodorizing Filter x 1			

- The data are measured under the following conditions(ISO-T1, H1). Cooling: Indoor temp. of 27˚CDB, 19˚CWB, and outdoor temp. of 35˚CDB. Heating: Indoor temp. of 20˚CDB, and outdoor temp. of 7˚CDB, 6˚CWB.
- Sound level indicates the value in an anechoic chamber. During operation these values are somewhat higher due to ambient conditions.
- 'tonne(s) of CO_2 equivalent' means a quantity of greenhouse gases- expressed as the product of the weight of the greenhouse gases in metric tonnes and of their global warming potential.

R410A

SINGLE-SPLIT WALL MOUNTED TYPE

Standard Series

SRK-ZSP-S

SRK25ZSP-S, SRK35ZSP-S, SRK45ZSP-S

Wireless remote control

SRC25ZSP-S
SRC35ZSP-S

SRC45ZSP-S

Elegant Timeless Design

ZSP series is elegant design fits into any kind of interior decoration.

Compact and Light weight

The SRK-ZSP-S series offers great installation flexibility.

FUNCTIONS

Energy saving

Air flow

Clean operation & Filter

Comfort & Convenience

Others

SPECIFICATIONS

Indoor unit				SRK25ZSP-S	SRK35ZSP-S	SRK45ZSP-S
Outdoor unit				SRC25ZSP-S	SRC35ZSP-S	SRC45ZSP-S
Power source				1 Phase, 220 - 240V, 50Hz		
Nominal cooling capacity (Min~Max)			kW	2.5(0.9~2.8)	3.2(0.9~3.5)	4.5(0.9~4.8)
Nominal heating capacity (Min~Max)			kW	2.8(0.8~3.9)	3.6(0.9~4.3)	5.0(0.8~5.8)
Power consumption		Cooling/Heating	kW	0.78 / 0.755	0.995 / 0.995	1.495 / 1.385
EER/COP		Cooling/Heating		3.21/3.71	3.22 / 3.62	3.01 / 3.61
Max. running current			A	9	9	14
Sound power level	Indoor	Cooling/Heating	dB(A)	58 / 57	59 / 58	58 / 62
	Outdoor	Cooling/Heating		58 / 59	60 / 60	63 / 64
Sound pressure level	Indoor	Cooling (Hi/Me/Lo)		45 / 34 / 23	45 / 36 / 23	44 / 39 / 24
		Heating (Hi/Me/Lo)		43 / 34 / 26	44 / 36 / 28	48 / 41 / 30
	Outdoor	Cooling/Heating		47 / 45	47 / 48	51 / 51
Air flow	Indoor	Cooling (Hi/Me/Lo)	m^3/min	10.0 / 7.3 / 4.2	9.5 / 6.8 / 4.2	9.0 / 7.2 / 3.8
		Heating (Hi/Me/Lo)		9.5 / 7.3 / 5.2	9.6 / 7.4 / 5.5	12.0 / 9.2 / 6.2
	Outdoor	Cooling/Heating		26.0 / 19.7	25.4 / 20.5	35.5 / 33.5
Exterior dimensions	Indoor	HeightxWidthxDepth	mm	267 x 783 x 210		
	Outdoor			540 x 645(+57) x 275		595 x 780(+62) x 290
Net weight	Indoor / Outdoor		kg	7.0 / 25.0	7.0 / 27.0	7.5 / 40.0
Refrigerant		Type/GWP		R410A / 2088		
		Charge	kg/TCO_2Eq	0.655 / 1.368	0.81 / 1.691	1.20 / 2.506
Refrigerant piping size		Liquid/Gas	ø mm	6.35(1/4") / 9.52(3/8")		6.35(1/4") / 12.7(1/2")
Refrigerant line (one way) length			m	Max. 15		Max. 25
Vertical height differences		Outdoor is higher/lower	m	Max. 10 / Max. 10		Max. 15 / Max. 15
Outdoor operating temperature range		Cooling	˚C	-15~46		
		Heating		-15~24		
Clean filter				–		

- The data are measured under the following conditions(ISO-T1, H1). Cooling: Indoor temp. of 27˚CDB, 19˚CWB, and outdoor temp. of 35˚CDB. Heating: Indoor temp. of 20˚CDB, and outdoor temp. of 7˚CDB, 6˚CWB.
- Sound level indicates the value in an anechoic chamber. During operation these values are somewhat higher due to ambient conditions.
- 'tonne(s) of CO_2 equivalent' means a quantity of greenhouse gases- expressed as the product of the weight of the greenhouse gases in metric tonnes and of their global warming potential.

R410A

SINGLE-SPLIT FLOOR STANDING TYPE

SRF-ZMX

SRF25ZMX-S, SRF35ZMX-S, SRF50ZMX-S

Auto air outlet selection

In case both lower and upper air outlets can be selected.

Flap control system

Selection of flap position is possible. A flaps can be set at different angles.

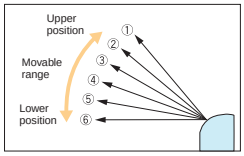

Installation workability

Piping and drain hose connection can be selected out of 6-directions.

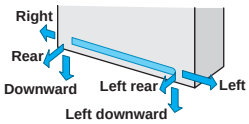

Single Multi

SRF-ZMX series can be selected for use as indoor units in the combination with SCM Multi system outdoor unit.

Wireless remote control

SRC25ZMX-S, SRC35ZMX-S

SRC50ZSX-S

FUNCTIONS

Energy saving

Air flow

Clean operation & Filter

Comfort & Convenience

Others

SPECIFICATIONS

Indoor unit				SRF25ZMX-S	SRF35ZMX-S	SRF50ZMX-S
Outdoor unit				SRC25ZMX-S	SRC35ZMX-S	SRC50ZSX-S
Power source				1 Phase, 220 - 240V, 50Hz		
Nominal cooling capacity (Min~Max)			kW	2.5 (0.9~3.2)	3.5 (0.9~4.1)	5.0 (1.1~5.2)
Nominal heating capacity (Min~Max)			kW	3.4 (0.9~4.7)	4.5 (0.9~5.1)	6.0 (0.6~6.9)
Power consumption		Cooling/Heating	kW	0.521 / 0.723	0.890 / 1.124	1.390 / 1.540
EER/COP		Cooling/Heating		4.80 / 4.70	3.93 / 4.00	3.60 / 3.90
Max. running current			A	8	8	15
Sound power level	Indoor	Cooling/Heating	dB(A)	51 / 51	52 / 52	58 / 58
	Outdoor	Cooling/Heating		60 / 60	63 / 62	63 / 62
Sound pressure level	Indoor	Cooling (Hi/Me/Lo/Ulo)		40 / 32 / 29 / 26	41 / 34 / 32 / 28	46 / 42 / 35 / 32
		Heating (Hi/Me/Lo/Ulo)		40 / 35 / 33 / 28	41 / 36 / 35 / 31	47 / 41 / 39 / 33
	Outdoor	Cooling/Heating		47 / 47	50 / 50	52 / 51
Air flow	Indoor	Cooling (Hi/Me/Lo/Ulo)	m^3/min	9.0 / 7.6 / 6.7 / 5.8	9.2 / 7.8 / 7.3 / 6.4	11.5 / 9.6 / 7.4 / 6.6
		Heating (Hi/Me/Lo/Ulo)		10.5 / 8.2 / 7.7 /6.6	10.7 / 8.3 / 8.1 / 7.4	12.0 / 10.0 / 9.4 / 7.6
	Outdoor	Cooling/Heating		29.5 / 27.0	32.5 / 29.5	39.0 / 33.0
Exterior dimensions	Indoor	HeightxWidthxDepth	mm	600 x 860 x 238		
	Outdoor			595 x 780(+62) x 290		640 x 800(+71) x 290
Net weight	Indoor / Outdoor		kg	18.0 / 35.0	19.0 / 35.0	19.0 / 45.0
Refrigerant		Type/GWP		R410A / 2088		
		Charge	kg/TCO_2Eq	1.2 / 2.506		1.5 / 3.132
Refrigerant piping size		Liquid/Gas	ø mm	6.35(1/4") / 9.52(3/8")		6.35(1/4") / 12.7(1/2")
Refrigerant line (one way) length			m	Max. 15		Max. 30
Vertical height differences		Outdoor is higher/lower	m	Max. 10 / Max. 10		Max. 20 / Max. 20
Outdoor operating temperature range		Cooling	˚C	-15~46		
		Heating		-15~24		-20~24
Clean filter				Allergen Clear Filter x 1 Photocatalytic Washable Deodorizing Filter x 1		

- The data are measured under the following conditions(ISO-T1, H1). Cooling: Indoor temp. of 27˚CDB, 19˚CWB, and outdoor temp. of 35˚CDB. Heating: Indoor temp. of 20˚CDB, and outdoor temp. of 7˚CDB, 6˚CWB.
- Sound level indicates the value in an anechoic chamber. During operation these values are somewhat higher due to ambient conditions.
- 'tonne(s) of CO_2 equivalent' means a quantity of greenhouse gases- expressed as the product of the weight of the greenhouse gases in metric tonnes and of their global warming potential.

R410A

SINGLE-SPLIT CEILING CONCEALED TYPE

SRR-ZM

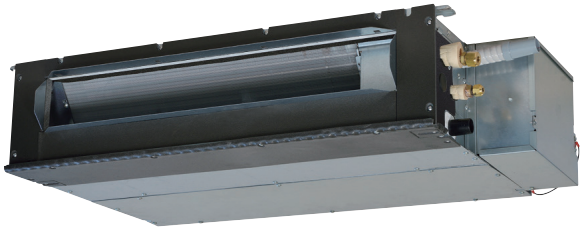

SRR25ZM-S, SRR35ZM-S

Thin design

The height of all SRR models is only 200mm.

Single Multi

SRR-ZM series can be selected for use as indoor units in the combination with SCM Multi system outdoor unit.

Bottom air inlet kit (option)

UT-BAT1EF

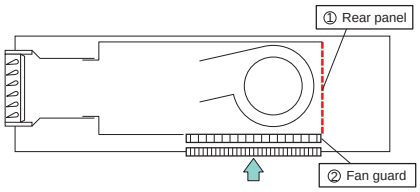

Wireless remote control

SRC25ZMX-S, SRC35ZMX-S

FUNCTIONS

Energy saving

Clean operation & Filter

Comfort & Convenience

Others

SPECIFICATIONS

Indoor unit				SRR25ZM-S	SRR35ZM-S
Outdoor unit				SRC25ZMX-S	SRC35ZMX-S
Power source				1 Phase, 220 - 240V, 50Hz	
Nominal cooling capacity (Min~Max)			kW	2.5 (1.0 ~ 3.3)	3.5 (1.0 ~ 3.9)
Nominal heating capacity (Min~Max)			kW	3.4 (1.4 ~ 4.8)	4.2 (1.5 ~ 5.2)
Power consumption		Cooling/Heating	kW	0.570 / 0.750	0.980 / 1.030
EER/COP		Cooling/Heating		4.39 / 4.53	3.57 / 4.08
Max. running current			A	8	8
Sound power level	Indoor	Cooling/Heating	dB(A)	56 / 59	57 / 60
	Outdoor	Cooling/Heating		60 / 60	62 / 62
Sound pressure level	Indoor	Cooling (Hi/Me/Lo/Ulo)		37 / 33 / 30 / 24	38 / 34 / 31 / 25
		Heating (Hi/Me/Lo/Ulo)		40 / 37 / 34 / 28	41 / 38 / 35 / 29
	Outdoor	Cooling/Heating		47 / 47	50 / 50
Air flow	Indoor	Cooling (Hi/Me/Lo/Ulo)	m^3/min	9.5 / 8.0 / 6.5 / 4.5	10.0 / 8.5 / 7.0 / 5.0
		Heating (Hi/Me/Lo/Ulo)		10.0 / 9.0 / 8.0 / 6.0	10.5 / 9.5 / 8.5 / 6.5
	Outdoor	Cooling/Heating		29.5 / 27.0	32.5 / 29.5
Available external static pressure			Pa	35(Initial static pressure with air filter : 5Pa)	
Exterior dimensions	Indoor	HeightxWidthxDepth	mm	200 x 750 x 500	
	Outdoor			595 x 780(+62) x 290	
Net weight	Indoor / Outdoor		kg	20.5 / 35.0	
Refrigerant		Type/GWP		R410A / 2088	
		Charge	kg/TCO_2Eq	1.2 / 2.506	
Refrigerant Ipiping size		Liquid/Gas	ø mm	6.35(1/4") / 9.52(3/8")	
Refrigerant line (one way) length			m	Max. 15	
Vertical height differences		Outdoor is higher/lower	m	Max. 10 / Max.10	
Outdoor operating temperature range		Cooling	˚C	-15~46	
		Heating		-15~24	
Bottom air inlet kit (option)				UT-BAT1EF	

- The data are measured under the following conditions(ISO-T1, H1). Cooling: Indoor temp. of 27˚CDB, 19˚CWB, and outdoor temp. of 35˚CDB. Heating: Indoor temp. of 20˚CDB, and outdoor temp. of 7˚CDB, 6˚CWB.
- Sound level indicates the value in an anechoic chamber. During operation these values are somewhat higher due to ambient conditions.
- 'tonne(s) of CO_2 equivalent' means a quantity of greenhouse gases- expressed as the product of the weight of the greenhouse gases in metric tonnes and of their global warming potential.

R410A

SINGLE-SPLIT 4WAY CEILING CASSETTE TYPE

FDTC-VF

Fits into standard 600x600 ceiling

FDTC25VF, FDTC35VF, FDTC40VF, FDTC50VF, FDTC60VF

Individual flap control system

According to room temperature conditions, four directions of air flow can be controlled by individual flap as preferred. Individual flap control is available even after installation.

Single Multi

FDTC-VF series can be selected for use as indoor units in the combination with SCM Multi system outdoor unit. (except 40VF)

Flap control system

Selection of flap position is possible. Individual flaps can be set at different angles.

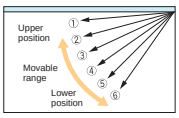

600mm Drain Pump is mounted

Drain can be discharged upward by 600mm from the ceiling surface close to the indoor unit.
It allows a piping layout with a high degree of freedom depending on the installation location.

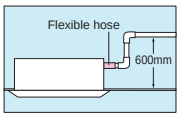

Wired remote control (option)

RC-EX3A RC-E5 RCH-E3

Wireless remote control (option)

RCN-TC-24W-E2

SRC25ZMX-S, SRC35ZMX-S

SRC40ZSX-S, SRC50ZSX-S, SRC60ZSX-S

FUNCTIONS

Energy saving | Air flow | Comfort & Convenience | Others

* When using Wireless remote control

SPECIFICATIONS

Indoor unit				FDTC25VF	FDTC35VF	FDTC40VF	FDTC50VF	FDTC60VF
Outdoor unit				SRC25ZMX-S	SRC35ZMX-S	SRC40ZSX-S	SRC50ZSX-S	SRC60ZSX-S
Power source				1 Phase, 220 - 240V, 50Hz				
Nominal cooling capacity (Min~Max)			kW	2.55 (0.9 ~ 3.2)	3.6 (0.9 ~ 4.1)	4.0 (1.1 ~ 4.7)	5.0 (1.1 ~ 5.6)	5.6 (1.1 ~ 6.3)
Nominal heating capacity (Min~Max)			kW	3.45 (0.9 ~ 4.7)	4.25 (0.9 ~ 5.1)	4.5 (0.6 ~ 5.4)	5.4 (0.6 ~ 6.3)	6.7 (0.6 ~ 6.7)
Power consumption		Cooling/Heating	kW	0.6 / 0.84	1.07 / 1.16	1.04 / 1.10	1.56 / 1.45	1.99 / 2.07
EER/COP		Cooling/Heating		4.25 / 4.11	3.36 / 3.66	3.85 / 4.09	3.21 / 3.72	2.81 / 3.24
Max. running current			A	8	8	12	15	15
Sound power level	Indoor	Cooling/Heating	dB(A)	56 / 56	58 / 58	60 / 60	60 / 60	60 / 60
	Outdoor	Cooling/Heating		56 / 56	58 / 58	63 / 63	63 / 63	65 / 65
Sound pressure level	Indoor	Cooling (P-Hi/Hi/Me/Lo)		38 / 36 / 32 / 29	41 / 40 / 36 / 30	47 / 42 / 36 / 30	47 / 42 / 36 / 30	47 / 46 / 39 / 30
		Heating (P-Hi/Hi/Me/Lo)		39 / 38 / 33 / 29.5	43 / 42 / 35 / 32	47 / 42 / 36 / 32	47 / 42 / 36 / 32	47 / 46 / 39 / 32
	Outdoor	Cooling/Heating		47 / 47	50 / 50	49 / 49	50 / 49	52 / 52
Air flow	Indoor	Cooling (P-Hi/Hi/Me/Lo)	m^3/min	10 / 9 / 8 / 6.5	11 / 9.5 / 9 / 7	13.5 / 11.5 / 9 / 7	13.5 / 11.5 / 9 / 7	13.5 / 13.5 / 10 / 7
		Heating (P-Hi/Hi/Me/Lo)		10.5 / 9.5 / 8.5 / 7	11.5 / 10 / 9 / 8	13.5 / 11.5 / 9 / 8	13.5 / 11.5 / 9 / 8	13.5 / 13.5 / 10 / 8
	Outdoor	Cooling/Heating		29.5 / 27.0	32.5 / 29.5	36 / 33	40 / 33	41.5 / 39
Exterior dimensions	Indoor	HeightxWidthxDepth	mm	Unit : 248 x 570 x 570 Panel : 35 x 700 x 700				
	Outdoor			595 x 780(+62) x 290		640 x 800(+71) x 290		
Net weight	Indoor / Outdoor		kg	18.5 (Unit : 15 Panel : 3.5) / 35.0		18.5 (Unit : 15 Panel : 3.5) / 45.0		
Refrigerant		Type/GWP		R410A / 2088				
		Charge	kg/TCO_2Eq	1.2 / 2.506		1.5 / 3.132		
Refrigerant piping size		Liquid/Gas	ø mm	6.35(1/4") / 9.52(3/8")		6.35(1/4") / 12.7(1/2")		
Refrigerant line (one way) length			m	Max. 15		Max. 30		
Vertical height differences		Outdoor is higher/lower	m	Max. 10 / Max.10		Max. 20 / Max.20		
Outdoor operating temperature range		Cooling	˚C	-15~46				
		Heating		-15~24		-20~24		
Panel				TC-PSA-25W-E				

- The data are measured under the following conditions(ISO-T1, H1). Cooling: Indoor temp. of 27˚CDB, 19˚CWB, and outdoor temp. of 35˚CDB. Heating: Indoor temp. of 20˚CDB, and outdoor temp. of 7˚CDB, 6˚CWB.
- Sound level indicates the value in an anechoic chamber. During operation these values are somewhat higher due to ambient conditions.
- 'tonne(s) of CO_2 equivalent' means a quantity of greenhouse gases- expressed as the product of the weight of the greenhouse gases in metric tonnes and of their global warming potential.

MULTI-SPLIT SCM

The Multi DC Inverter range are innovative Multi-split systems from Mitsubishi Heavy Industries Thermal Systems which offers the perfect answer for air conditioning comfort in several environments. A single outdoor unit can air condition up to 6 different rooms. Utilising a range of compact and elegant indoor units that are available in 6 different types make air conditioning any indoor environment possible . The whole range is characterised by high flexibility, high energy efficiency and extremely low noise levels.

Wall Mounted type

SRK/SKM

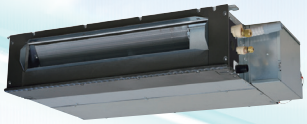

Ceiling Concealed type

SRR

4way Ceiling Cassette type

FDTC

Fits into standard 600x600 ceiling

Floor Standing type

SRF

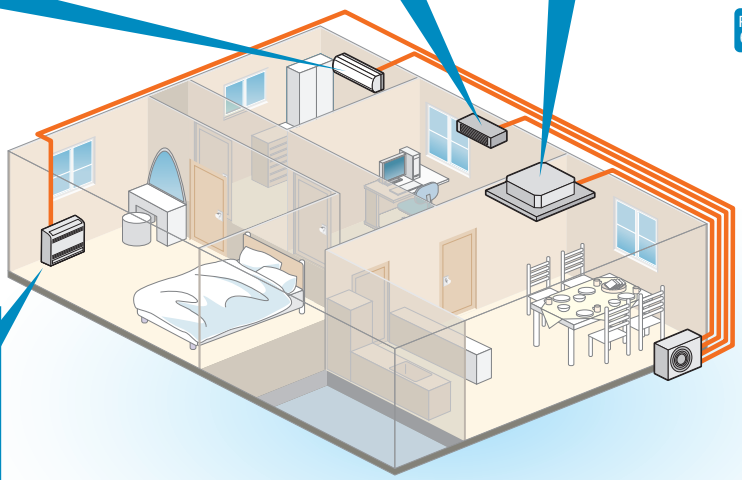

Ceiling Suspended type

FDE

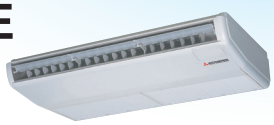

Duct Connected type

FDUM

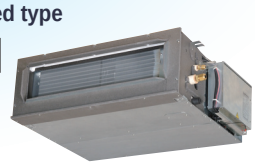

A wide variety of choices for indoor units

R410A

MULTI-SPLIT SYSTEM

Outdoor Units

Powerful, efficient and silent outdoor units are available in 8 sizes and able to combine up to 6 indoor units.

SCM40ZS-S
SCM45ZS-S

SCM71ZM-S1
SCM80ZM-S1

NEW

SCM50ZS-S1
SCM60ZM-S1

SCM100ZM-S
SCM125ZM-S

Energy saving

All models can achieve very high seasonal efficiency thanks to the application of inverter technology which makes it possible to vary the power output according to demand for cooling or heating. This makes it possible to reach the set temperature quickly and to keep it stable over time saving about 30% in consumption compared to traditional fixed speed air conditioners.

SEER in Cooling

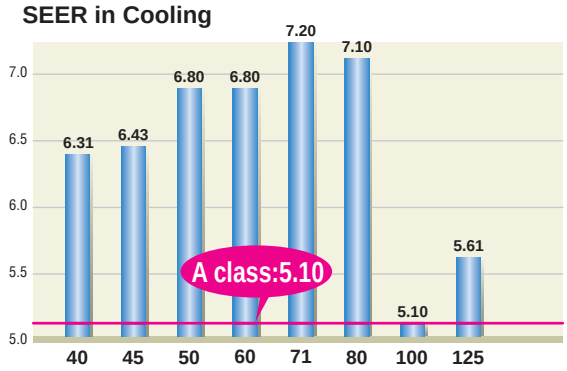

SCOP in Heating

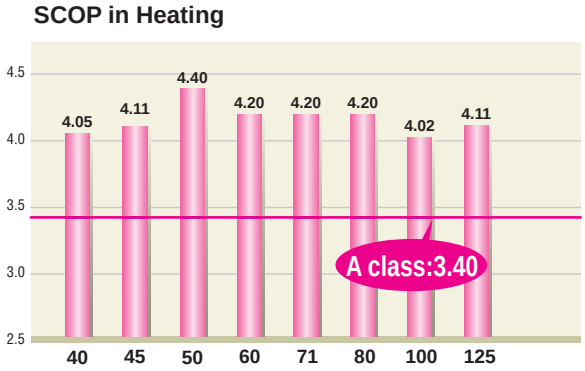

・The above values are based on indoor unit combination with SRK-ZSX only.

Comfort

Thanks to the application of the Twin Rotary compressor, the outdoor units have low noise levels.
All the units also operate in heating and cooling mode with an outdoor temperature limit of -15°C.
Silent operation is newly installed in SCM50, 60, 71, 80 type.

Installation Flexibility

With a generous maximum piping length of 90m*, you are given greater freedom to decide where the indoor units will be installed to optimize interior space and convenience.

		SCM40/ 45ZS-S	SCM50ZS-S1/ SCM60ZM-S1	SCM71/ 80ZM-S1	SCM100/ 125ZM-S
length for one indoor unit		under 25m	under 25m	under 25m	under 25m
total length for all rooms		under 30m	under 40m	under 70m	under 90m*
height difference	lower installation spot of the indoor unit (A)	under 15m	under 15m	under 20m	under 20m
	upper installation spot of the indoor unit (B)	under 15m	under 15m	under 20m	under 20m
	maximum height difference of the indoor units (C)	under 25m	under 25m	under 25m	under 25m
length of precharged refrigerant pipe		30m	40m	40m	50m

SCM125ZM-S

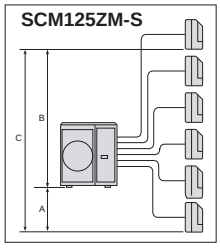

MULTI-SPLIT SYSTEM

■SPECIFICATIONS

Item		Model	For two rooms		For three rooms	
			SCM40ZS-S	SCM45ZS-S	SCM50ZS-S1	SCM60ZM-S1
Power Source			1Phase, 220 - 240V, 50Hz			
Nominal cooling capacity (Min~Max)		kW	4.0(1.5~5.9)	4.5(1.5~6.4)	5.0(1.8~7.1)	6.0(1.8~7.5)
Nominal heating capacity (Min~Max)		kW	4.5(1.3~6.3)	5.3(1.3~6.5)	6.0(1.4~7.5)	6.8(1.5~7.8)
Power Consumption	Cooling	kW	0.84(0.59~2.13)	1.04(0.59~2.30)	1.05(0.60~2.15)	1.43(0.50~2.39)
	Heating	kW	0.90(0.54~1.70)	1.15(0.54~1.92)	1.21(0.55~2.58)	1.45(0.60~3.00)
EER	Cooling		4.76	4.33	4.76	4.20
COP	Heating		5.00	4.61	4.96	4.69
Max. running current		A	14	14	14	17
Sound power level	Cooling	dB(A)	62	62	61	63
	Heating	dB(A)	64	64	63	65
Sound pressure level	Cooling	dB(A)	48	49	48	50
	Heating	dB(A)	50	50	50	52
Air flow	Cooling	m³/min	32.5	32.5	41.0	42.0
	Heating		32.5	32.5	41.0	42.0
Exterior dimensions (H×W×D)		mm	595×780(+90)×290		640×850(+65)×290	
Net weight		kg	42.0	42.0	49.0	49.5
Refrigerant	Type/GWP		R410A/2088			
	Charge	kg/TCO_2Eq	1.9/3.967		2.5/5.22	
Refrigerant piping size	Liquid	Φmm	6.35(1/4")×2		6.35(1/4")×3	
	Gas		9.52(3/8")×2		9.52(3/8")×3	
Outdoor operating temperature range	Cooling	˚C	-15~43			
	Heating		-15~24			
Number of Connectable indoor units			2	2	Min.2~Max.3	Min.2~Max.3
Total indoor units capacity		kW	6.0	7.0	8.5	11.0

Item		Model	For four rooms		For five/six rooms	
			SCM71ZM-S1	SCM80ZM-S1	SCM100ZM-S	SCM125ZM-S
Power Source			1Phase, 220 - 240V, 50Hz			
Nominal cooling capacity (Min~Max)		kW	7.1(1.8~8.8)	8.0(1.8~9.2)	10.0(1.8~12.0)	12.5(1.8~14.0)
Nominal heating capacity (Min~Max)		kW	8.6(1.5~9.4)	9.3(1.5~9.8)	12.0(1.5~13.5)	13.5(1.5~14.0)
Power Consumption	Cooling	kW	1.58(0.48~2.75)	1.95(0.48~2.83)	2.86(0.65~4.03)	3.90(0.65~4.80)
	Heating	kW	2.00(0.60~3.35)	2.26(0.60~3.43)	2.93(0.70~3.40)	3.25(0.70~3.42)
EER	Cooling		4.49	4.10	3.50	3.21
COP	Heating		4.30	4.12	4.10	4.15
Max. running current		A	20	20	29	29
Sound power level	Cooling	dB(A)	63	66	68	69
	Heating	dB(A)	66	66	71	72
Sound pressure level	Cooling	dB(A)	50	54	56	57
	Heating	dB(A)	54	54	59	60
Air flow	Cooling	m³/min	50.0	56.0	75.0	75.0
	Heating		56.0	56.0	75.0	82.0
Exterior dimensions (H×W×D)		mm	750×880(+73)×340		945×970(+73)×370	
Net weight		kg	62.0		92.0	
Refrigerant	Type/GWP		R410A/2088			
	Charge	kg/TCO_2Eq	3.15/6.577		6.0/12.528	
Refrigerant piping size	Liquid	Φmm	6.35(1/4")×4		6.35(1/4")×5	6.35(1/4")×6
	Gas		9.52(3/8")×4		9.52(3/8")×5	9.52(3/8")×6
Outdoor operating temperature range	Cooling	˚C	-15~43			
	Heating		-15~24			
Number of Connectable indoor units			Min.2~Max.4	Min.2~Max.4	Min.4*~Max.5	Min.4*~Max.6
Total indoor units capacity		kW	12.5	13.5	16.0	19.5

- The data are measured under the following conditions(ISO-T1, H1). Cooling: Indoor temp. of 27˚CDB, 19˚CWB, and outdoor temp. of 35˚CDB. Heating: Indoor temp. of 20˚CDB, and outdoor temp. of 7˚CDB, 6˚CWB.
- Sound level Indicates the value in an anechoic chamber. During operation these values are somewhat higher due to ambient conditions.
- 'tonne(s) of CO_2 equivalent' means a quantity of greenhouse gases- expressed as the product of the weight of the greenhouse gases in metric tonnes and of their global warming potential.

* In case of SRK71ZR+SRK71ZR, 2 Indoor units can be connectable. In case of the combination with SRK-ZSX, SRK71ZR & FDE50VH, only 3 indoor units can be connectable.
The total connecting capacity of indoor units should be between 100 ~ 160.

■OPTION

Wired remote control

RC-EX3A

RC-E5

RCH-E3

Wireless remote control

RCN-TC-24W-E2

RCN-KIT4-E2

RCN-E-E3

MULTI-SPLIT SYSTEM

■INDOOR UNITS SPECIFICATION FOR MULTI COMBINATIONS

Wall Mounted

SRK-ZSX(-W,-WB,-WT,-S)

Item		Model	SRK20ZSX	SRK25ZSX	SRK35ZSX	SRK50ZSX	SRK60ZSX
Nominal cooling capacity		kW	2.0	2.5	3.5	5.0	6.0
Nominal heating capacity		kW	3.0	3.4	4.5	5.8	6.8
Sound power level	Cooling	dB(A)	53	55	58	59	62
	Heating	dB(A)	55[53]	56	58	62	63
Sound pressure level	Cooling(Hi/Me/Lo/Ulo)	dB(A)	38 / 31 / 24 / 19	39 / 33 / 25 / 19	43 / 35 / 26 / 19	44 / 39 / 31 / 22	46 / 41 / 33 / 22
	Heating(Hi/Me/Lo/Ulo)	dB(A)	38 / 33[32] / 25 / 19	40 / 34 / 27 / 19	42[41] / 35 / 28 / 19	46 / 41 / 33 / 23	46 / 42 / 34 / 23
Air flow	Cooling(Hi/Me/Lo/Ulo)	m^3/min	11.3 / 9.1 / 6.0 / 5.0	12.2 / 10.0 / 6.7 / 5.0	13.1 / 10.8 / 7.3 / 5.0	14.3 / 12.4 / 7.8 / 5.4	16.3 / 13.4 / 8.9 / 5.4
	Heating(Hi/Me/Lo/Ulo)	m^3/min	12.2 / 10.3 / 7.2 / 5.4	12.8 / 11.0 / 7.8 / 5.4	13.9 / 11.8 / 8.6 / 5.4	17.3 / 14.3 / 9.8 / 6.2	17.8 / 13.7 / 10.9 / 6.2
Exterior dimensions (H×W×D)		mm	305×920×220				
Net weight		kg	13.0				
Refrigerant piping size	Liquid / Gas	Φmm	6.35(1/4") / 9.52(3/8")			6.35(1/4") / 12.7(1/2")	
Clean filter			Allergen Clear Filter ×1, Photocatalytic Washable Deodorizing Filter×1				

[ ] : in case of ZSX-S

Wall Mounted

SRK-ZR(-W,-S)

NEW

Item		Model	SRK71ZR
Nominal cooling capacity		kW	7.1
Nominal heating capacity		kW	8.0
Sound power level	Cooling	dB(A)	57[58]
	Heating	dB(A)	60
Sound pressure level	Cooling(Hi/Me/Lo/Ulo)	dB(A)	44 / 41 / 37 / 25
	Heating(Hi/Me/Lo/Ulo)	dB(A)	46 / 39 / 35 / 28
Air flow	Cooling(Hi/Me/Lo/Ulo)	m^3/min	20.5 / 18.6 / 16.2 / 10.4
	Heating(Hi/Me/Lo/Ulo)	m^3/min	25.0[25.5] / 19.8 / 17.3 / 13.3
Exterior dimensions (H×W×D)		mm	339×1197×262
Net weight		kg	15.5
Refrigerant piping size	Liquid / Gas	Φmm	6.35 (1/4") / 15.88 (5/8")
Clean filter			Allergen Clear Filter ×1, Photocatalytic Washable Deodorizing Filter×1

[ ] : in case of ZR-S

Wall Mounted

SRK-ZS(-W,-WB,-WT,-S,-SB,-ST)

NEW

Item		Model	SRK20ZS	SRK25ZS	SRK35ZS	SRK50ZS
Nominal cooling capacity		kW	2.0	2.5	3.5	5.0
Nominal heating capacity		kW	3.0	3.4	4.5	5.8
Sound power level	Cooling	dB(A)	48[50]	50[52]	54[56]	59[58]
	Heating	dB(A)	50[52]	53[55]	56[58]	60[59]
Sound pressure level	Cooling(Hi/Me/Lo/Ulo)	dB(A)	34 / 25 / 22 / 19	36 / 28 / 23 / 19	40 / 30 / 26 / 19	46[45] / 36 / 29 [28] / 22
	Heating(Hi/Me/Lo/Ulo)	dB(A)	36 / 29 / 23 / 19	39 / 30 / 24 / 19	41 / 36 / 25 / 19	46[45] / 37 / 31 / 24
Air flow	Cooling(Hi/Me/Lo/Ulo)	m^3/min	9.3 / 7.0 / 5.9 / 5.0	9.9 / 8.0 / 5.9 / 5.0	11.3 / 8.7 / 7.0 / 5.0	12.1 / 9.9 / 7.4 / 5.9
	Heating(Hi/Me/Lo/Ulo)	m^3/min	10.0 / 8.5 / 6.5 / 5.9	11.3 / 8.7 / 6.7 / 5.9	12.3 / 11.0 / 7.0 / 5.6[5.9]	13.9 / 11.2 / 9.1 / 7.4
Exterior dimensions (H×W×D)		mm	290×870×230			
Net weight		kg	9.5			10.0
Refrigerant piping size	Liquid / Gas	Φmm	6.35(1/4") / 9.52(3/8")			6.35(1/4") / 9.52(3/8")
Clean filter			Allergen Clear Filter × 1, Photocatalytic Washable Deodorizing Filter × 1			

[ ] : in case of ZS-S,-SB,-ST

Wall Mounted

SKM-ZSP

Item		Model	SKM20ZSP-S	SKM25ZSP-S	SKM35ZSP-S
Nominal cooling capacity		kW	2.0	2.5	3.5
Nominal heating capacity		kW	3.0	3.4	4.5
Sound power level	Cooling	dB(A)	58	58	59
	Heating	dB(A)	56	57	59
Sound pressure level	Cooling(Hi/Me/Lo)	dB(A)	42 / 35 / 24	43 / 35 / 24	44 / 37 / 24
	Heating(Hi/Me/Lo)	dB(A)	41 / 35 / 27	41 / 35 / 27	42 / 37 / 29
Air flow	Cooling(Hi/Me/Lo)	m^3/min	8.5 / 7.0 / 5.0	8.5 / 7.0 / 5.0	9.0 / 7.5 / 5.0
	Heating(Hi/Me/Lo)	m^3/min	8.0 / 7.0 / 5.5	8.0 / 7.0 / 5.5	8.5 / 7.0 / 6.0
Exterior dimensions (H×W×D)		mm	262×769×210		
Net weight		kg	7.6		
Refrigerant piping size	Liquid / Gas	Φmm	6.35(1/4")/9.52(3/8")		
Clean filter			—		

Floor Standing

SRF-ZMX

Item		Model	SRF25ZMX-S	SRF35ZMX-S	SRF50ZMX-S
Nominal cooling capacity		kW	2.5	3.5	5.0
Nominal heating capacity		kW	3.4	4.5	5.8
Sound power level	Cooling	dB(A)	51	52	58
	Heating	dB(A)	51	52	58
Sound pressure level	Cooling(Hi/Me/Lo/Ulo)	dB(A)	40 / 32 / 29 / 26	41 / 34 / 32 / 28	46 / 42 / 35 / 32
	Heating(Hi/Me/Lo/Ulo)	dB(A)	40 / 35 / 33 / 28	41 / 36 / 35 / 31	47 / 41 / 39 / 33
Air flow	Cooling(Hi/Me/Lo/Ulo)	m^3/min	9.0 / 7.6 / 6.7 / 5.8	9.2 / 7.8 / 7.3 / 6.4	11.5 / 9.6 / 7.4 / 6.6
	Heating(Hi/Me/Lo/Ulo)	m^3/min	10.5 / 8.2 / 7.7 / 6.6	10.7 / 8.3 / 8.1 / 7.4	12.0 / 10.0 / 9.4 / 7.6
Exterior dimensions(H×W×D)		mm	600×860×238		
Net weight		kg	18.0	19.0	
Refrigerant piping size	Liquid / Gas	Φmm	6.35(1/4") / 9.52(3/8")		6.35(1/4") / 12.7(1/2")
Clean filter			Allergen Clear Filter × 1 Photocatalytic Washable Deodorizing Filter×1		

Ceiling Concealed

SRR-ZM

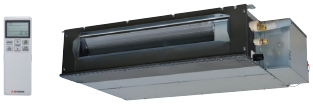

Item		Model	SRR25ZM-S	SRR35ZM-S	SRR50ZM-S	SRR60ZM-S
Nominal cooling capacity		kW	2.5	3.5	5.0	6.0
Nominal heating capacity		kW	3.4	4.5	5.8	6.8
Sound power level	Cooling	dB(A)	56	57	59	60
	Heating	dB(A)	59	60	61	63
Sound pressure level	Cooling(Hi/Me/Lo/Ulo)	dB(A)	37 / 33 / 30 / 24	38 / 34 / 31 / 25	41 / 37 / 34 / 29	44 / 38 / 35 / 30
	Heating(Hi/Me/Lo/Ulo)	dB(A)	40 / 37 / 34 / 28	41 / 38 / 35 / 29	43 / 39 / 37 / 32	45 / 41 / 38 / 33
Air flow	Cooling(Hi/Me/Lo/Ulo)	m^3/min	9.5 / 8.5 / 6.5 / 4.5	10.0 / 8.5 / 7.0 / 5.0	13.5 / 11.0 / 10.0 / 7.5	14.5 / 11.5 / 10.5 / 8.0
	Heating(Hi/Me/Lo/Ulo)	m^3/min	10.0 / 9.0 / 8.0 / 6.0	10.5 / 9.5 / 8.5 / 6.5	14.5 / 12.5 / 11.0 / 8.5	15.0 / 13.0 / 11.5 / 9.0
Available external static pressure		Pa	35(Initial static pressure with air filter : 5Pa)		50(Initial static pressure with air filter : 5Pa)	
Exterior dimensions(H×W×D)		mm	200×750×500		200×950×500	
Net weight		kg	20.5		24.0	
Refrigerant piping size	Liquid / Gas	Φmm	6.35(1/4") / 9.52(3/8")		6.35(1/4") / 12.7(1/2")	
Bottom air inlet kit (option)			UT-BAT1EF		UT-BAT2EF	

4way Ceiling Cassette

FDTC-VF

(Option)

Item		Model	FDTC25VF	FDTC35VF	FDTC50VF	FDTC60VF
Nominal cooling capacity		kW	2.5	3.5	5.0	6.0
Nominal heating capacity		kW	3.4	4.5	5.8	6.8
Sound power level	Cooling	dB(A)	56	58	60	60
	Heating	dB(A)	56	58	60	60
Sound pressure level	Cooling(P-Hi/Hi/Me/Lo)	dB(A)	38 / 36 / 32 / 29	41 / 40 / 36 / 30	47 / 42 / 36 / 30	47 / 46 / 39 / 30
	Heating(P-Hi/Hi/Me/Lo)	dB(A)	39 / 38 / 33 / 29.5	43 / 42 / 35 / 32	47 / 42 / 36 / 32	47 / 46 / 39 / 32
Air flow	Cooling(P-Hi/Hi/Me/Lo)	m^3/min	10.0 / 9.0 / 8.0 / 6.5	11.0 / 9.5 / 9.0 / 7.0	13.5 / 11.5 / 9.0 / 7.0	13.5 / 13.5 / 10.0 / 7.0
	Heating(P-Hi/Hi/Me/Lo)	m^3/min	10.5 / 9.5 / 8.5 / 7.0	11.5 / 10.0 / 9.0 / 8.0	13.5 / 11.5 / 9.0 / 8.0	13.5 / 13.5 / 10.0 / 8.0
Exterior dimensions (H×W×D)	Main unit	mm	248×570×570			
	Panel	mm	35×700×700			
Net weight		kg	18.5 (Unit.15 Panel:3.5)			
Refrigerant piping size	Liquid / Gas	Φmm	6.35(1/4") / 9.52(3/8")		6.35(1/4") / 12.7(1/2")	
Panel			TC-PSA-25W-E			

Duct Connected-Low/Middle Static Pressure / Ceiling Suspended

FDUM-VH / FDE-VH

(Option)

(Option)

Item		Model	FDUM50VH	FDE50VH
Nominal cooling capacity		kW	5.0	5.0
Nominal heating capacity		kW	5.8	5.8
Sound power level	Cooling	dB(A)	60	60
	Heating	dB(A)	60	60
Sound pressure level	Cooling(P-Hi/Hi/Me/Lo)	dB(A)	37 / 32 / 29 / 26	46 / 38/ 36/ 31
	Heating(P-Hi/Hi/Me/Lo)	dB(A)	37 / 32 / 29 / 26	46 / 38/ 36/ 31
Air flow	Cooling(P-Hi/Hi/Me/Lo)	m^3/min	13.0 / 10.0 / 9.0 / 8.0	13.0 / 10.0 / 9.0 / 7.0
	Heating(P-Hi/Hi/Me/Lo)	m^3/min	13.0 / 10.0 / 9.0 / 8.0	13.0 / 10.0 / 9.0 / 7.0
Available external static pressure		Pa	Standard : 35 Max : 100	—
Exterior dimensions (H×W×D)		mm	280×750×635	210×1070×690
Net weight		kg	29.0	28.0
Refrigerant piping size	Liquid / Gas	Φmm	6.35(1/4") / 12.7(1/2")	6.35(1/4") / 12.7(1/2")
Air filter			Filter KIT : UM-FL1EF (option)	Pocket Plastic net × 2 (Washable)

NOTES
- The data are measured under the following conditions(ISO-T1, H1). Cooling: Indoor temp. of 27°CDB, 19°CWB, and outdoor temp. of 35°CDB. Heating: Indoor temp. of 20°CDB, and outdoor temp. of 7°CDB, 6°CWB.
- Sound level the value in an anechoic chamber.During operation these values are somewhat higher due to ambient conditions.

MULTI-SPLIT SYSTEM

SCM40ZS-S Table of Indoor unit combination with all indoor unit SRK-ZSX type only

Indoor unit combination			Heating capacity (kW)					Power consumption(W)			Standard current(A)		
			Room heating capacity		Total capacity								
			A	B	Min.	Standard	Max.	Min.	Standard	Max.	220V	230V	240V
Heating operation	1*1 room	20	3.0	-	1.3	3.0	3.7	520	750	1070	3.7	3.5	3.4
		25	3.4	-	1.3	3.4	4.2	520	920	1210	4.5	4.3	4.1
		35	4.5	-	1.3	4.5	5.0	520	1210	1450	5.9	5.6	5.4
	2*2 room	20 + 20	2.25	2.25	2.0	4.5	6.3	550	900	1700	4.4	4.2	4.0
		20 + 25	2.36	2.94	2.0	5.3	6.3	550	1150	1700	5.4	5.2	5.0
		20 + 35	2.11	3.69	2.0	5.8	6.3	550	1290	1700	6.0	5.8	5.5
		25 + 25	2.90	2.90	2.0	5.8	6.3	550	1290	1700	6.0	5.8	5.5
		25 + 35	2.42	3.38	2.0	5.8	6.3	550	1290	1700	6.0	5.8	5.5

The values are for 1 indoor unit (*1) and 2 indoor units (*2) operation.
The same hereinafter.

Indoor unit combination			Cooling capacity (kW)					Power consumption(W)			Standard current(A)		
			Room cooling capacity		Total capacity								
			A	B	Min.	Standard	Max.	Min.	Standard	Max.	220V	230V	240V
Cooling operation	1 room	20	2.0	-	1.5	2.0	2.8	560	590	880	2.9	2.8	2.7
		25	2.5	-	1.5	2.5	3.4	560	670	1040	3.3	3.2	3.1
		35	3.5	-	1.5	3.5	3.9	560	970	1200	4.8	4.6	4.4
	2 room	20 + 20	2.00	2.00	3.0	4.0	5.7	600	840	1750	4.2	4.0	3.8
		20 + 25	2.00	2.50	3.0	4.5	5.9	600	1040	2030	5.0	4.8	4.6
		20 + 35	1.89	3.31	3.0	5.2	5.9	600	1430	2030	6.7	6.4	6.2
		25 + 25	2.50	2.50	3.0	5.0	5.9	600	1280	2030	6.1	5.8	5.6
		25 + 35	2.17	3.03	3.0	5.2	5.9	600	1430	2030	6.7	6.4	6.2

SCM40ZS-S Table of Indoor unit combination with all indoor unit SKM-ZSP type only

Indoor unit combination			Heating capacity (kW)					Power consumption(W)			Standard current(A)		
			Room heating capacity		Total capacity								
			A	B	Min.	Standard	Max.	Min.	Standard	Max.	220V	230V	240V
Heating operation	1 room	20	3.0	-	1.3	3.0	3.5	520	950	1070	4.6	4.4	4.2
		25	3.4	-	1.3	3.4	4.0	520	1020	1210	5.0	4.8	4.6
		35	4.5	-	1.3	4.5	4.8	520	1390	1450	6.8	6.5	6.2
	2 room	20 + 20	2.25	2.25	2.0	4.5	6.1	550	1020	1700	5.0	4.8	4.6
		20 + 25	2.36	2.94	2.0	5.3	6.1	550	1310	1700	6.2	5.9	5.7
		20 + 35	2.11	3.69	2.0	5.8	6.1	550	1400	1700	6.5	6.3	6.0
		25 + 25	2.90	2.90	2.0	5.8	6.1	550	1400	1700	6.5	6.3	6.0
		25 + 35	2.42	3.38	2.0	5.8	6.1	550	1400	1700	6.5	6.3	6.0

Indoor unit combination			Cooling capacity (kW)					Power consumption(W)			Standard current(A)		
			Room cooling capacity		Total capacity								
			A	B	Min.	Standard	Max.	Min.	Standard	Max.	220V	230V	240V
Cooling operation	1 room	20	2.0	-	1.5	2.0	2.7	560	650	880	3.2	3.1	3.0
		25	2.5	-	1.5	2.5	3.2	560	830	1040	4.1	4.0	3.8
		35	3.5	-	1.5	3.5	3.7	560	1100	1200	5.5	5.2	5.0
	2 room	20 + 20	2.00	2.00	3.0	4.0	5.6	600	1050	1750	5.2	5.0	4.8
		20 + 25	2.00	2.50	3.0	4.5	5.8	600	1300	2030	6.3	6.0	5.8
		20 + 35	1.89	3.31	3.0	5.2	5.8	600	1600	2030	7.5	7.2	6.9
		25 + 25	2.50	2.50	3.0	5.0	5.8	600	1420	2030	6.7	6.4	6.2
		25 + 35	2.17	3.03	3.0	5.2	5.8	600	1600	2030	7.5	7.2	6.9

SCM40ZS-S Table of Indoor unit combination with other indoor unit

Indoor unit combination			Heating capacity (kW)					Power consumption(W)			Standard current(A)		
			Room heating capacity		Total capacity								
			A	B	Min.	Standard	Max.	Min.	Standard	Max.	220V	230V	240V
Heating operation	1 room	20	3.0	-	1.3	3.0	3.5	520	900	1070	4.4	4.2	4.0
		25	3.4	-	1.3	3.4	4.0	520	1070	1210	5.2	5.0	4.8
		35	4.5	-	1.3	4.5	4.8	520	1340	1450	6.5	6.3	6.0
	2 room	20 + 20	2.25	2.25	2.0	4.5	6.1	550	930	1700	4.5	4.3	4.2
		20 + 25	2.36	2.94	2.0	5.3	6.1	550	1240	1700	5.9	5.6	5.4
		20 + 35	2.11	3.69	2.0	5.8	6.1	550	1330	1700	6.2	5.9	5.7
		25 + 25	2.90	2.90	2.0	5.8	6.1	550	1330	1700	6.2	5.9	5.7
		25 + 35	2.42	3.38	2.0	5.8	6.1	550	1330	1700	6.2	5.9	5.7

Indoor unit combination			Cooling capacity (kW)					Power consumption(W)			Standard current(A)		
			Room cooling capacity		Total capacity								
			A	B	Min.	Standard	Max.	Min.	Standard	Max.	220V	230V	240V
Cooling operation	1 room	20	2.0	-	1.5	2.0	2.7	560	620	880	3.1	3.0	2.8
		25	2.5	-	1.5	2.5	3.2	560	710	1040	3.5	3.4	3.2
		35	3.5	-	1.5	3.5	3.7	560	1030	1200	5.1	4.9	4.7
	2 room	20 + 20	2.00	2.00	3.0	4.0	5.6	600	880	1750	4.4	4.2	4.0
		20 + 25	2.00	2.50	3.0	4.5	5.8	600	1090	2030	5.3	5.0	4.8
		20 + 35	1.89	3.31	3.0	5.2	5.8	600	1500	2030	7.0	6.7	6.5
		25 + 25	2.50	2.50	3.0	5.0	5.8	600	1340	2030	6.4	6.1	5.8
		25 + 35	2.17	3.03	3.0	5.2	5.8	600	1500	2030	7.0	6.7	6.5

SCM45ZS-S Table of Indoor unit combination with all indoor unit SRK-ZSX type only

Indoor unit combination			Heating capacity (kW)					Power consumption(W)			Standard current(A)		
			Room heating capacity		Total capacity								
			A	B	Min.	Standard	Max.	Min.	Standard	Max.	220V	230V	240V
Heating operation	1 room	20	3.0	-	1.3	3.0	3.7	520	750	1070	3.7	3.5	3.4
		25	3.4	-	1.3	3.4	4.2	520	920	1210	4.5	4.3	4.1
		35	4.5	-	1.3	4.5	5.0	520	1210	1450	5.9	5.6	5.4
	2 room	20 + 20	2.25	2.25	2.0	4.5	6.5	550	900	1900	4.4	4.2	4.0
		20 + 25	2.36	2.94	2.0	5.3	6.5	550	1150	1900	5.4	5.2	5.0
		20 + 35	2.18	3.82	2.0	6.0	6.5	550	1500	1900	6.9	6.6	6.3
		25 + 25	3.00	3.00	2.0	6.0	6.5	550	1500	1900	6.9	6.6	6.3
		25 + 35	2.50	3.50	2.0	6.0	6.5	550	1500	1900	6.9	6.6	6.3
		35 + 35	3.00	3.00	2.0	6.0	6.5	550	1500	1900	6.9	6.6	6.3

Indoor unit combination			Cooling capacity (kW)					Power consumption(W)			Standard current(A)		
			Room heating capacity		Total capacity								
			A	B	Min.	Standard	Max.	Min.	Standard	Max.	220V	230V	240V
Cooling operation	1 room	20	2.0	-	1.5	2.0	2.8	560	590	880	2.9	2.8	2.7
		25	2.5	-	1.5	2.5	3.4	560	670	1040	3.3	3.2	3.1
		35	3.5	-	1.5	3.5	3.9	560	970	1200	4.8	4.6	4.4
	2 room	20 + 20	2.00	2.00	3.0	4.0	5.7	600	840	1750	4.2	4.0	3.8
		20 + 25	2.00	2.50	3.0	4.5	5.9	600	1040	2030	5.0	4.8	4.6
		20 + 35	2.00	3.50	3.0	5.5	6.3	600	1490	2160	7.0	6.7	6.4
		25 + 25	2.50	2.50	3.0	5.0	6.2	600	1280	2110	6.1	5.8	5.6
		25 + 35	2.42	3.38	3.0	5.8	6.4	600	1740	2200	8.0	7.6	7.3
		35 + 35	2.90	2.90	3.0	5.8	6.4	600	1740	2200	8.0	7.6	7.3

SCM45ZS-S Table of Indoor unit combination with all indoor unit SKM-ZSP type only

Indoor unit combination			Heating capacity (kW)					Power consumption(W)			Standard current(A)		
			Room heating capacity		Total capacity								
			A	B	Min.	Standard	Max.	Min.	Standard	Max.	220V	230V	240V
Heating operation	1 room	20	3.0	-	1.3	3.0	3.5	520	950	1070	4.6	4.4	4.2
		25	3.4	-	1.3	3.4	4.0	520	1020	1210	5.0	4.8	4.6
		35	4.5	-	1.3	4.5	4.8	520	1390	1450	6.8	6.5	6.2
	2 room	20 + 20	2.25	2.25	2.0	4.5	6.3	550	1020	1900	5.0	4.8	4.6
		20 + 25	2.36	2.94	2.0	5.3	6.3	550	1310	1900	6.4	6.1	5.9
		20 + 35	2.18	3.82	2.0	6.0	6.3	550	1600	1900	7.3	7.0	6.7
		25 + 25	3.00	3.00	2.0	6.0	6.3	550	1600	1900	7.3	7.0	6.7
		25 + 35	2.50	3.50	2.0	6.0	6.3	550	1600	1900	7.3	7.0	6.7
		35 + 35	3.00	3.00	2.0	6.0	6.3	550	1600	1900	7.3	7.0	6.7

Indoor unit combination			Cooling capacity (kW)					Power consumption(W)			Standard current(A)		
			Room heating capacity		Total capacity								
			A	B	Min.	Standard	Max.	Min.	Standard	Max.	220V	230V	240V
Cooling operation	1 room	20	2.0	-	1.5	2.0	2.7	560	650	880	3.2	3.1	3.0
		25	2.5	-	1.5	2.5	3.2	560	830	1040	4.1	4.0	3.8
		35	3.5	-	1.5	3.5	3.7	560	1100	1200	5.5	5.2	5.0
	2 room	20 + 20	2.00	2.00	3.0	4.0	5.6	600	1050	1750	5.2	5.0	4.8
		20 + 25	2.00	2.50	3.0	4.5	5.8	600	1300	2030	6.3	6.0	5.8
		20 + 35	2.00	3.50	3.0	5.5	6.2	600	1650	2160	7.7	7.4	7.1
		25 + 25	2.50	2.50	3.0	5.0	6.1	600	1380	2110	6.5	6.3	6.0
		25 + 35	2.42	3.38	3.0	5.8	6.3	600	1900	2200	8.7	8.3	8.0
		35 + 35	2.90	2.90	3.0	5.8	6.3	600	1900	2200	8.7	8.3	8.0

SCM45ZS-S Table of Indoor unit combination with other indoor unit

Indoor unit combination			Heating capacity (kW)					Power consumption(W)			Standard current(A)		
			Room heating capacity		Total capacity								
			A	B	Min.	Standard	Max.	Min.	Standard	Max.	220V	230V	240V
Heating operation	1 room	20	3.0	-	1.3	3.0	3.5	520	900	1070	4.4	4.2	4.0
		25	3.4	-	1.3	3.4	4.0	520	1070	1210	5.2	5.0	4.8
		35	4.5	-	1.3	4.5	4.8	520	1340	1450	6.5	6.3	6.0
	2 room	20 + 20	2.25	2.25	2.0	4.5	6.3	550	930	1900	4.5	4.3	4.2
		20 + 25	2.36	2.94	2.0	5.3	6.3	550	1240	1900	6.0	5.8	5.5
		20 + 35	2.18	3.82	2.0	6.0	6.3	550	1550	1900	7.1	6.8	6.5
		25 + 25	3.00	3.00	2.0	6.0	6.3	550	1550	1900	7.1	6.8	6.5
		25 + 35	2.50	3.50	2.0	6.0	6.3	550	1550	1900	7.1	6.8	6.5
		35 + 35	3.00	3.00	2.0	6.0	6.3	550	1550	1900	7.1	6.8	6.5

Indoor unit combination			Cooling capacity (kW)					Power consumption(W)			Standard current(A)		
			Room heating capacity		Total capacity								
			A	B	Min.	Standard	Max.	Min.	Standard	Max.	220V	230V	240V
Cooling operation	1 room	20	2.0	-	1.5	2.0	2.7	560	620	880	3.1	3.0	2.8
		25	2.5	-	1.5	2.5	3.2	560	710	1040	3.5	3.4	3.2
		35	3.5	-	1.5	3.5	3.7	560	1030	1200	5.1	4.9	4.7
	2 room	20 + 20	2.00	2.00	3.0	4.0	5.6	600	880	1750	4.4	4.2	4.0
		20 + 25	2.00	2.50	3.0	4.5	5.8	600	1090	2030	5.3	5.0	4.8
		20 + 35	2.00	3.50	3.0	5.5	6.2	600	1560	2160	7.3	7.0	6.7
		25 + 25	2.50	2.50	3.0	5.0	6.1	600	1340	2110	6.4	6.1	5.8
		25 + 35	2.42	3.38	3.0	5.8	6.3	600	1820	2200	8.4	8.0	7.7
		35 + 35	2.90	2.90	3.0	5.8	6.3	600	1820	2200	8.4	8.0	7.7

MULTI-SPLIT SYSTEM

SCM50ZS-S1 Table of Indoor unit combination with all indoor unit SRK-ZSX type only

Indoor unit combination			Heating capacity (kW)						Power consumption(W)			Standard current(A)		
			Room heating capacity			Total capacity			Min.	Standard	Max.	220V	230V	240V
			A	B	C	Min.	Standard	Max.						
Heating operation	1 room	20	3.0	-	-	1.4	3.0	3.7	480	820	1100	3.9	3.7	3.6
		25	3.4	-	-	1.4	3.4	4.2	480	980	1240	4.6	4.4	4.2
		35	4.5	-	-	1.4	4.5	5.0	480	1270	1490	6.0	5.7	5.5
		50	5.8	-	-	1.4	5.8	6.2	480	1710	2260	7.9	7.6	7.3
	2 room	20 + 20	2.95	2.95	-	2.0	5.9	7.3	540	1450	2580	6.7	6.4	6.2
		20 + 25	2.67	3.33	-	2.0	6.0	7.3	540	1500	2580	7.0	6.7	6.4
		20 + 35	2.29	4.01	-	2.0	6.3	7.3	540	1580	2580	7.3	7.0	6.7
		20 + 50	1.89	4.71	-	2.0	6.6	7.3	540	1670	2580	7.7	7.4	7.1
		25 + 25	3.05	3.05	-	2.0	6.1	7.3	540	1530	2580	7.1	6.8	6.5
		25 + 35	2.67	3.73	-	2.0	6.4	7.3	540	1610	2580	7.5	7.1	6.8
		25 + 50	2.20	4.40	-	2.0	6.6	7.3	540	1670	2580	7.7	7.4	7.1
		35 + 35	3.30	3.30	-	2.0	6.6	7.3	540	1670	2580	7.7	7.4	7.1
		35 + 50	2.72	3.88	-	2.0	6.6	7.3	540	1670	2580	7.7	7.4	7.1
	3 room	20 + 20 + 20	2.00	2.00	2.00	3.0	6.0	7.5	600	1210	2580	5.6	5.4	5.1
		20 + 20 + 25	1.91	1.91	2.38	3.0	6.2	7.5	600	1370	2580	6.4	6.1	5.8
		20 + 20 + 35	1.76	1.76	3.08	3.0	6.6	7.5	600	1520	2580	7.1	6.7	6.5
		20 + 25 + 25	1.83	2.29	2.29	3.0	6.4	7.5	600	1430	2580	6.6	6.3	6.1
		20 + 25 + 35	1.70	2.13	2.98	3.0	6.8	7.5	600	1580	2580	7.3	7.0	6.7
		25 + 25 + 25	2.20	2.20	2.20	3.0	6.6	7.5	600	1520	2580	7.1	6.7	6.5
		25 + 25 + 35	2.06	2.06	2.88	3.0	7.0	7.5	600	1640	2580	7.6	7.3	7.0

Indoor unit combination			Cooling capacity (kW)						Power consumption(W)			Standard current(A)		
			Room cooling capacity			Total capacity			Min.	Standard	Max.	220V	230V	240V
			A	B	C	Min.	Standard	Max.						
Cooling operation	1 room	20	2.0	-	-	1.8	2.0	2.8	500	550	900	2.6	2.5	2.4
		25	2.5	-	-	1.8	2.5	3.4	500	720	1070	3.4	3.2	3.1
		35	3.5	-	-	1.8	3.5	3.9	500	1080	1230	5.1	4.8	4.6
		50	5.0	-	-	1.8	5.0	5.5	500	1700	2000	7.9	7.5	7.2
	2 room	20 + 20	2.00	2.00	-	3.0	4.0	5.7	570	910	1800	4.2	4.1	3.9
		20 + 25	1.91	2.39	-	3.0	4.3	5.9	570	1070	1980	5.0	4.8	4.6
		20 + 35	1.82	3.18	-	3.0	5.0	6.2	570	1430	2070	6.6	6.3	6.1
		20 + 50	1.71	4.29	-	3.0	6.0	6.5	570	1960	2150	9.0	8.6	8.2
		25 + 25	2.35	2.35	-	3.0	4.7	6.2	570	1270	2070	5.9	5.6	5.4
		25 + 35	2.21	3.09	-	3.0	5.3	6.5	570	1600	2150	7.4	7.1	6.8
		25 + 50	2.00	4.00	-	3.0	6.0	6.5	570	1960	2150	9.0	8.6	8.2
		35 + 35	3.00	3.00	-	3.0	6.0	6.5	570	1960	2150	9.0	8.6	8.2
		35 + 50	2.47	3.53	-	3.0	6.0	6.5	570	1960	2150	9.0	8.6	8.2
	3 room	20 + 20 + 20	1.67	1.67	1.67	3.4	5.0	7.1	690	1050	2150	4.9	4.7	4.5
		20 + 20 + 25	1.60	1.60	2.00	3.4	5.2	7.1	690	1160	2150	5.4	5.1	4.9
		20 + 20 + 35	1.49	1.49	2.61	3.4	5.6	7.1	690	1330	2150	6.2	5.9	5.7
		20 + 25 + 25	1.54	1.93	1.93	3.4	5.4	7.1	690	1260	2150	5.8	5.6	5.4
		20 + 25 + 35	1.45	1.81	2.54	3.4	5.8	7.1	690	1430	2150	6.6	6.3	6.1
		25 + 25 + 25	1.87	1.87	1.87	3.4	5.6	7.1	690	1330	2150	6.2	5.9	5.7
		25 + 25 + 35	1.76	1.76	2.47	3.4	6.0	7.1	690	1490	2150	6.9	6.6	6.3

SCM50ZS-S1 Table of Indoor unit combination with all indoor unit SKM-ZSP type only

Indoor unit combination			Heating capacity (kW)						Power consumption(W)			Standard current(A)		
			Room heating capacity			Total capacity			Min.	Standard	Max.	220V	230V	240V
			A	B	C	Min.	Standard	Max.						
Heating operation	1 room	20	3.0	-	-	1.4	3.0	3.5	480	1040	1100	4.9	4.7	4.5
		25	3.4	-	-	1.4	3.4	4.0	480	1200	1240	5.7	5.4	5.2
		35	4.5	-	-	1.4	4.5	4.8	480	1490	1490	7.0	6.7	6.4
	2 room	20 + 20	2.95	2.95	-	2.0	5.9	7.0	540	1530	2580	7.1	6.8	6.5
		20 + 25	2.67	3.33	-	2.0	6.0	7.0	540	1580	2580	7.3	7.0	6.7
		20 + 35	2.29	4.01	-	2.0	6.3	7.0	540	1670	2580	7.7	7.4	7.1
		25 + 25	3.05	3.05	-	2.0	6.1	7.0	540	1610	2580	7.5	7.1	6.8
		25 + 35	2.67	3.73	-	2.0	6.4	7.0	540	1700	2580	7.9	7.5	7.2
		35 + 35	3.30	3.30	-	2.0	6.6	7.0	540	1760	2580	8.1	7.8	7.4
	3 room	20 + 20 + 20	2.00	2.00	2.00	3.0	6.0	7.3	600	1360	2580	6.3	6.0	5.8
		20 + 20 + 25	1.91	1.91	2.38	3.0	6.2	7.3	600	1450	2580	6.7	6.4	6.2
		20 + 20 + 35	1.76	1.76	3.08	3.0	6.6	7.3	600	1620	2580	7.5	7.2	6.9
		20 + 25 + 25	1.83	2.29	2.29	3.0	6.4	7.3	600	1530	2580	7.1	6.8	6.5
		20 + 25 + 35	1.70	2.13	2.98	3.0	6.8	7.3	600	1680	2580	7.8	7.5	7.1
		25 + 25 + 25	2.20	2.20	2.20	3.0	6.6	7.3	600	1620	2580	7.5	7.2	6.9
		25 + 25 + 35	2.06	2.06	2.88	3.0	7.0	7.3	600	1750	2580	8.1	7.7	7.4

Indoor unit combination			Cooling capacity (kW)						Power consumption(W)			Standard current(A)		
			Room cooling capacity			Total capacity			Min.	Standard	Max.	220V	230V	240V
			A	B	C	Min.	Standard	Max.						
Cooling operation	1 room	20	2.0	-	-	1.8	2.0	2.7	500	610	900	2.9	2.8	2.6
		25	2.5	-	-	1.8	2.5	3.2	500	800	1070	3.8	3.6	3.5
		35	3.5	-	-	1.8	3.5	3.7	500	1170	1230	5.5	5.2	5.0
	2 room	20 + 20	2.00	2.00	-	3.0	4.0	5.6	570	1000	1800	4.7	4.5	4.3
		20 + 25	1.91	2.39	-	3.0	4.3	5.8	570	1150	1980	5.4	5.1	4.9
		20 + 35	1.82	3.18	-	3.0	5.0	6.1	570	1530	2070	7.1	6.8	6.5
		25 + 25	2.35	2.35	-	3.0	4.7	6.1	570	1520	2070	7.1	6.8	6.5
		25 + 35	2.21	3.09	-	3.0	5.3	6.3	570	1720	2150	8.0	7.6	7.3
		35 + 35	3.00	3.00	-	3.0	6.0	6.3	570	2050	2150	9.4	9.0	8.6
	3 room	20 + 20 + 20	1.67	1.67	1.67	3.4	5.0	6.9	690	1160	2150	5.4	5.1	4.9
		20 + 20 + 25	1.60	1.60	2.00	3.4	5.2	6.9	690	1250	2150	5.8	5.5	5.3
		20 + 20 + 35	1.49	1.49	2.61	3.4	5.6	6.9	690	1400	2150	6.5	6.2	6.0
		20 + 25 + 25	1.54	1.93	1.93	3.4	5.4	6.9	690	1350	2150	6.3	6.0	5.7
		20 + 25 + 35	1.45	1.81	2.54	3.4	5.8	6.9	690	1500	2150	7.0	6.7	6.4
		25 + 25 + 25	1.87	1.87	1.87	3.4	5.6	6.9	690	1400	2150	6.5	6.2	6.0
		25 + 25 + 35	1.76	1.76	2.47	3.4	6.0	6.9	690	1600	2150	7.4	7.1	6.8

SCM50ZS-S1 Table of Indoor unit combination with other indoor unit

Indoor unit combination			Heating capacity (kW)						Power consumption(W)			Standard current(A)		
			Room heating capacity			Total capacity			Min.	Standard	Max.	220V	230V	240V
			A	B	C	Min.	Standard	Max.						
Heating operation	1 room	20	3.0	-	-	1.4	3.0	3.5	480	1020	1100	4.8	4.6	4.4
		25	3.4	-	-	1.4	3.4	4.0	480	1180	1240	5.6	5.3	5.1
		35	4.5	-	-	1.4	4.5	4.8	480	1470	1490	6.9	6.6	6.3
		50	5.8	-	-	1.4	5.8	6.0	480	1910	2260	8.8	8.4	8.0
	2 room	20 + 20	2.95	2.95	-	2.0	5.9	7.0	540	1510	2580	7.0	6.7	6.4
		20 + 25	2.67	3.33	-	2.0	6.0	7.0	540	1560	2580	7.2	6.9	6.6
		20 + 35	2.29	4.01	-	2.0	6.3	7.0	540	1650	2580	7.7	7.3	7.0
		20 + 50	1.89	4.71	-	2.0	6.6	7.0	540	1740	2580	8.0	7.7	7.4
		25 + 25	3.05	3.05	-	2.0	6.1	7.0	540	1590	2580	7.4	7.1	6.8
		25 + 35	2.67	3.73	-	2.0	6.4	7.0	540	1680	2580	7.8	7.5	7.1
		25 + 50	2.20	4.40	-	2.0	6.6	7.0	540	1740	2580	8.0	7.7	7.4
		35 + 35	3.30	3.30	-	2.0	6.6	7.0	540	1740	2580	8.0	7.7	7.4
		35 + 50	2.72	3.88	-	2.0	6.6	7.0	540	1740	2580	8.0	7.7	7.4
	3 room	20 + 20 + 20	2.00	2.00	2.00	3.0	6.0	7.3	600	1340	2580	6.2	5.9	5.7
		20 + 20 + 25	1.91	1.91	2.38	3.0	6.2	7.3	600	1430	2580	6.6	6.3	6.1
		20 + 20 + 35	1.76	1.76	3.08	3.0	6.6	7.3	600	1600	2580	7.4	7.1	6.8
		20 + 25 + 25	1.83	2.29	2.29	3.0	6.4	7.3	600	1510	2580	7.0	6.7	6.4
		20 + 25 + 35	1.70	2.13	2.98	3.0	6.8	7.3	600	1660	2580	7.7	7.4	7.1
		25 + 25 + 25	2.20	2.20	2.20	3.0	6.6	7.3	600	1600	2580	7.4	7.1	6.8
		25 + 25 + 35	2.06	2.06	2.88	3.0	7.0	7.3	600	1730	2580	8.0	7.7	7.3

Indoor unit combination			Cooling capacity (kW)						Power consumption(W)			Standard current(A)		
			Room cooling capacity			Total capacity			Min.	Standard	Max.	220V	230V	240V
			A	B	C	Min.	Standard	Max.						
Cooling operation	1 room	20	2.0	-	-	1.8	2.0	2.7	500	580	900	2.7	2.6	2.5
		25	2.5	-	-	1.8	2.5	3.2	500	760	1070	3.6	3.4	3.3
		35	3.5	-	-	1.8	3.5	3.7	500	1140	1230	5.3	5.1	4.9
		50	5.0	-	-	1.8	5.0	5.3	500	1790	2000	8.3	7.9	7.6
	2 room	20 + 20	2.00	2.00	-	3.0	4.0	5.6	570	950	1800	4.4	4.2	4.1
		20 + 25	1.91	2.39	-	3.0	4.3	5.8	570	1110	1980	5.2	4.9	4.7
		20 + 35	1.82	3.18	-	3.0	5.0	6.1	570	1490	2070	6.9	6.6	6.3
		20 + 50	1.71	4.29	-	3.0	6.0	6.3	570	2040	2150	9.4	9.0	8.6
		25 + 25	2.35	2.35	-	3.0	4.7	6.1	570	1320	2070	6.1	5.9	5.6
		25 + 35	2.21	3.09	-	3.0	5.3	6.3	570	1660	2150	7.7	7.4	7.1
		25 + 50	2.00	4.00	-	3.0	6.0	6.3	570	2040	2150	9.4	9.0	8.6
		35 + 35	3.00	3.00	-	3.0	6.0	6.3	570	2040	2150	9.4	9.0	8.6
		35 + 50	2.47	3.53	-	3.0	6.0	6.3	570	2040	2150	9.4	9.0	8.6
	3 room	20 + 20 + 20	1.67	1.67	1.67	3.4	5.0	6.9	690	1120	2150	5.2	5.0	4.8
		20 + 20 + 25	1.60	1.60	2.00	3.4	5.2	6.9	690	1200	2150	5.6	5.3	5.1
		20 + 20 + 35	1.49	1.49	2.61	3.4	5.6	6.9	690	1370	2150	6.4	6.1	5.8
		20 + 25 + 25	1.54	1.93	1.93	3.4	5.4	6.9	690	1300	2150	6.0	5.8	5.5
		20 + 25 + 35	1.45	1.81	2.54	3.4	5.8	6.9	690	1470	2150	6.8	6.5	6.3
		25 + 25 + 25	1.87	1.87	1.87	3.4	5.6	6.9	690	1370	2150	6.4	6.1	5.8
		25 + 25 + 35	1.76	1.76	2.47	3.4	6.0	6.9	690	1540	2150	7.1	6.8	6.5

MULTI-SPLIT SYSTEM

SCM60ZM-S1 Table of Indoor unit combination with all indoor unit SRK-ZSX type only

Indoor unit combination			Heating capacity (kW)						Power consumption(W)			Standard current(A)		
			Room heating capacity			Total capacity								
			A	B	C	Min.	Standard	Max.	Min.	Standard	Max.	220V	230V	240V
Heating operation	1 room	20	3.0	-	-	1.5	3.0	3.7	600	780	1330	3.6	3.4	3.3
		25	3.4	-	-	1.5	3.4	4.2	600	950	1510	4.4	4.2	4.0
		35	4.5	-	-	1.5	4.5	5.0	600	1270	1790	5.8	5.6	5.3
		50	5.8	-	-	1.5	5.8	6.4	600	1730	2310	7.9	7.6	7.3
		60	6.8	-	-	1.5	6.8	7.3	600	2040	2660	9.4	9.0	8.6
	2 room	20+20	3.00	3.00	-	2.1	6.0	7.3	630	1450	2100	6.7	6.4	6.1
		20+25	2.71	3.39	-	2.1	6.1	7.5	630	1520	2550	7.0	6.7	6.4
		20+35	2.36	4.14	-	2.1	6.5	7.6	630	1620	3000	7.4	7.1	6.8
		20+50	2.00	5.00	-	2.1	7.0	7.6	630	1830	3000	8.4	8.0	7.7
		20+60	1.78	5.33	-	2.1	7.1	7.6	630	1860	3000	8.5	8.2	7.8
		25+25	3.15	3.15	-	2.1	6.3	7.6	630	1580	3000	7.3	6.9	6.6
		25+35	2.79	3.91	-	2.1	6.7	7.6	630	1700	3000	7.8	7.5	7.2
		25+50	2.37	4.73	-	2.1	7.1	7.6	630	1860	3000	8.5	8.2	7.8
		25+60	2.09	5.01	-	2.1	7.1	7.6	630	1860	3000	8.5	8.2	7.8
		35+35	3.50	3.50	-	2.1	7.0	7.6	630	1830	3000	8.4	8.0	7.7
		35+50	2.92	4.18	-	2.1	7.1	7.6	630	1860	3000	8.5	8.2	7.8
		35+60	2.62	4.48	-	2.1	7.1	7.6	630	1860	3000	8.5	8.2	7.8
		50+50	3.55	3.55	-	2.1	7.1	7.6	630	1860	3000	8.5	8.2	7.8
		50+60	3.23	3.87	-	2.1	7.1	7.6	630	1860	3000	8.5	8.2	7.8
	3 room	20+20+20	2.27	2.27	2.27	3.2	6.8	7.8	660	1450	3000	6.7	6.4	6.1
		20+20+25	2.09	2.09	2.62	3.2	6.8	7.8	660	1450	3000	6.7	6.4	6.1
		20+20+35	1.81	1.81	3.17	3.2	6.8	7.8	660	1450	3000	7.1	6.8	6.6
		20+20+50	1.56	1.56	3.89	3.2	7.0	7.8	660	1620	3000	7.4	7.1	6.8
		20+20+60	1.44	1.44	4.32	3.2	7.2	7.8	660	1780	3000	8.2	7.8	7.5
		20+25+25	1.94	2.43	2.43	3.2	6.8	7.8	660	1450	3000	7.1	6.8	6.6
		20+25+35	1.73	2.16	3.02	3.2	6.9	7.8	660	1500	3000	6.9	6.6	6.3
		20+25+50	1.49	1.87	3.74	3.2	7.1	7.8	660	1670	3000	7.7	7.3	7.0
		20+25+60	1.37	1.71	4.11	3.2	7.2	7.8	660	1780	3000	8.2	7.8	7.5
		20+35+35	1.56	2.72	2.72	3.2	7.0	7.8	660	1620	3000	7.4	7.1	6.8
		20+35+50	1.37	2.40	3.43	3.2	7.2	7.8	660	1780	3000	8.2	7.8	7.5
		25+25+25	2.27	2.27	2.27	3.2	6.8	7.8	660	1450	3000	7.1	6.8	6.6
		25+25+35	2.06	2.06	2.88	3.2	7.0	7.8	660	1620	3000	7.4	7.1	6.8
		25+25+50	1.80	1.80	3.60	3.2	7.2	7.8	660	1780	3000	8.2	7.8	7.5
		25+25+60	1.64	1.64	3.93	3.2	7.2	7.8	660	1780	3000	8.2	7.8	7.5
		25+35+35	1.87	2.62	2.62	3.2	7.1	7.8	660	1670	3000	7.7	7.3	7.0
		25+35+50	1.64	2.29	3.27	3.2	7.2	7.8	660	1780	3000	8.2	7.8	7.5
		35+35+35	2.40	2.40	2.40	3.2	7.2	7.8	660	1780	3000	8.2	7.8	7.5

Indoor unit combination			Cooling capacity (kW)						Power consumption(W)			Standard current(A)		
			Room cooling capacity			Total capacity								
			A	B	C	Min.	Standard	Max.	Min.	Standard	Max.	220V	230V	240V
Cooling operation	1 room	20	2.0	-	-	1.8	2.0	2.8	500	540	950	2.5	2.4	2.3
		25	2.5	-	-	1.8	2.5	3.4	500	720	1080	3.3	3.2	3.0
		35	3.5	-	-	1.8	3.5	3.9	500	1090	1240	5.0	4.8	4.6
		50	5.0	-	-	1.8	5.0	5.8	500	1780	2100	8.2	7.8	7.5
		60	6.0	-	-	1.8	6.0	6.3	500	2260	2370	10.4	9.9	9.5
	2 room	20+20	2.00	2.00	-	3.0	4.0	5.7	570	750	1750	3.4	3.3	3.2
		20+25	2.00	2.50	-	3.0	4.5	5.9	570	990	1910	4.5	4.3	4.2
		20+35	1.93	3.37	-	3.0	5.3	6.2	570	1550	2110	7.1	6.8	6.5
		20+50	1.89	4.71	-	3.0	6.6	6.9	570	2280	2390	10.5	10.0	9.6
		20+60	1.68	5.03	-	3.0	6.7	6.9	570	2320	2390	10.7	10.2	9.8
		25+25	2.45	2.45	-	3.0	4.9	6.2	570	1270	2110	5.8	5.6	5.3
		25+35	2.42	3.38	-	3.0	5.8	6.5	570	1840	2270	8.4	8.1	7.7
		25+50	2.23	4.47	-	3.0	6.7	6.9	570	2320	2390	10.7	10.2	9.8
		25+60	1.97	4.73	-	3.0	6.7	6.9	570	2320	2390	10.7	10.2	9.8
		35+35	3.30	3.30	-	3.0	6.6	6.9	570	2280	2390	10.5	10.0	9.6
		35+50	2.76	3.94	-	3.0	6.7	6.9	570	2320	2390	10.7	10.2	9.8
		35+60	2.47	4.23	-	3.0	6.7	6.9	570	2320	2390	10.7	10.2	9.8
		50+50	3.35	3.35	-	3.0	6.7	6.9	570	2320	2390	10.7	10.2	9.8
		50+60	3.05	3.65	-	3.0	6.7	6.9	570	2320	2390	10.7	10.2	9.8
	3 room	20+20+20	2.00	2.00	2.00	3.6	6.0	7.5	690	1430	2390	6.6	6.3	6.0
		20+20+25	1.85	1.85	2.80	3.6	6.0	7.5	690	1430	2390	6.6	6.3	6.0
		20+20+35	1.60	1.60	2.80	3.6	6.0	7.5	690	1430	2390	6.8	6.5	6.2
		20+20+50	1.40	1.40	3.50	3.6	6.3	7.5	690	1480	2390	6.8	6.5	6.2
		20+20+60	1.28	1.28	3.84	3.6	6.4	7.5	690	1500	2390	6.9	6.6	6.3
		20+25+25	1.69	2.11	2.11	3.6	5.9	7.5	690	1410	2390	6.5	6.2	5.9
		20+25+35	1.53	1.91	2.67	3.6	6.1	7.5	690	1460	2390	6.7	6.4	6.1
		20+25+50	1.35	1.68	3.37	3.6	6.4	7.5	690	1500	2390	6.9	6.6	6.3
		20+25+60	1.26	1.57	3.77	3.6	6.6	7.5	690	1520	2390	7.0	6.7	6.4
		20+35+35	1.40	2.45	2.45	3.6	6.3	7.5	690	1480	2390	6.8	6.5	6.2
		20+35+50	1.26	2.20	3.14	3.6	6.6	7.5	690	1520	2390	7.0	6.7	6.4
		25+25+25	2.00	2.00	2.00	3.6	6.0	7.5	690	1430	2390	6.8	6.5	6.2
		25+25+35	1.79	1.79	2.51	3.6	6.1	7.5	690	1460	2390	6.7	6.4	6.1
		25+25+50	1.60	1.60	3.20	3.6	6.4	7.5	690	1500	2390	6.9	6.6	6.3
		25+25+60	1.52	1.52	3.65	3.6	6.7	7.5	690	1540	2390	7.1	6.8	6.5
		25+35+35	1.68	2.36	2.36	3.6	6.4	7.5	690	1500	2390	6.9	6.6	6.3
		25+35+50	1.52	2.13	3.05	3.6	6.7	7.5	690	1540	2390	7.1	6.8	6.5
		35+35+35	2.20	2.20	2.20	3.6	6.6	7.5	690	1520	2390	7.0	6.7	6.4

SCM60ZM-S1 Table of Indoor unit combination with other indoor unit

Indoor unit combination			Heating capacity (kW)						Power consumption(W)			Standard current(A)		
			Room heating capacity			Total capacity								
			A	B	C	Min.	Standard	Max.	Min.	Standard	Max.	220V	230V	240V
Heating operation	1 room	20	3.0	-	-	1.5	3.0	3.5	600	970	1330	4.5	4.3	4.1
		25	3.4	-	-	1.5	3.4	4.0	600	1140	1510	5.2	5.0	4.8
		35	4.5	-	-	1.5	4.5	4.8	600	1480	1790	6.8	6.5	6.2
		50	5.8	-	-	1.5	5.8	6.1	600	1960	2310	9.0	8.6	8.2
		60	6.8	-	-	1.5	6.8	7.0	600	2250	2660	10.3	9.9	9.5
	2 room	20+20	3.00	3.00	-	2.1	6.0	7.0	630	1520	2100	7.0	6.7	6.4
		20+25	2.71	3.39	-	2.1	6.1	7.2	630	1600	2550	7.3	7.0	6.7
		20+35	2.36	4.14	-	2.1	6.5	7.3	630	1710	3000	7.9	7.5	7.2
		20+50	2.00	5.00	-	2.1	7.0	7.3	630	1940	3000	8.9	8.5	8.2
		20+60	1.78	5.33	-	2.1	7.1	7.3	630	1980	3000	9.1	8.7	8.3
		25+25	3.15	3.15	-	2.1	6.3	7.3	630	1660	3000	7.6	7.3	7.0
		25+35	2.79	3.91	-	2.1	6.7	7.3	630	1790	3000	8.2	7.9	7.5
		25+50	2.37	4.73	-	2.1	7.1	7.3	630	1980	3000	9.1	8.7	8.3
		25+60	2.09	5.01	-	2.1	7.1	7.3	630	1980	3000	9.1	8.7	8.3
		35+35	3.50	3.50	-	2.1	7.0	7.3	630	1940	3000	8.9	8.5	8.2
		35+50	2.92	4.18	-	2.1	7.1	7.3	630	1980	3000	9.1	8.7	8.3
		35+60	2.62	4.48	-	2.1	7.1	7.3	630	1980	3000	9.1	8.7	8.3
		50+50	3.55	3.55	-	2.1	7.1	7.3	630	1980	3000	9.1	8.7	8.3
		50+60	3.23	3.87	-	2.1	7.1	7.3	630	1980	3000	9.1	8.7	8.3
	3 room	20+20+20	2.27	2.27	2.27	3.2	6.8	7.6	660	1540	3000	7.1	6.8	6.5
		20+20+25	2.09	2.09	2.62	3.2	6.8	7.6	660	1540	3000	7.1	6.8	6.5
		20+20+35	1.81	1.81	3.17	3.2	6.8	7.6	660	1540	3000	7.1	6.8	6.5
		20+20+50	1.56	1.56	3.89	3.2	7.0	7.6	660	1730	3000	7.9	7.6	7.3
		20+20+60	1.44	1.44	4.32	3.2	7.2	7.6	660	1900	3000	8.7	8.3	8.0
		20+25+25	1.94	2.43	2.43	3.2	6.8	7.6	660	1540	3000	7.1	6.8	6.5
		20+25+35	1.73	2.16	3.02	3.2	6.9	7.6	660	1590	3000	7.3	7.0	6.7
		20+25+50	1.49	1.87	3.74	3.2	7.1	7.6	660	1780	3000	8.2	7.8	7.5
		20+25+60	1.37	1.71	4.11	3.2	7.2	7.6	660	1900	3000	8.7	8.3	8.0
		20+35+35	1.56	2.72	2.72	3.2	7.0	7.6	660	1730	3000	7.9	7.6	7.3
		20+35+50	1.37	2.40	3.43	3.2	7.2	7.6	660	1900	3000	8.7	8.3	8.0
		25+25+25	2.27	2.27	2.27	3.2	6.8	7.6	660	1540	3000	7.1	6.8	6.5
		25+25+35	2.06	2.06	2.88	3.2	7.0	7.6	660	1730	3000	7.9	7.6	7.3
		25+25+50	1.80	1.80	3.60	3.2	7.2	7.6	660	1900	3000	8.7	8.3	8.0
		25+25+60	1.64	1.64	3.93	3.2	7.2	7.6	660	1900	3000	8.7	8.3	8.0
		25+35+35	1.87	2.62	2.62	3.2	7.1	7.6	660	1780	3000	8.2	7.8	7.5
		25+35+50	1.64	2.29	3.27	3.2	7.2	7.6	660	1900	3000	8.7	8.3	8.0
		35+35+35	2.40	2.40	2.40	3.2	7.2	7.6	660	1900	3000	8.7	8.3	8.0

Indoor unit combination			Cooling capacity (kW)						Power consumption(W)			Standard current(A)		
			Room cooling capacity			Total capacity								
			A	B	C	Min.	Standard	Max.	Min.	Standard	Max.	220V	230V	240V
Cooling operation	1 room	20	2.0	-	-	1.8	2.0	2.7	500	570	950	2.6	2.5	2.4
		25	2.5	-	-	1.8	2.5	3.2	500	760	1080	3.5	3.3	3.2
		35	3.5	-	-	1.8	3.5	3.7	500	1150	1240	5.3	5.1	4.8
		50	5.0	-	-	1.8	5.0	5.6	500	1860	2100	8.5	8.2	7.8
		60	6.0	-	-	1.8	6.0	6.1	500	2350	2370	10.8	10.3	9.9
	2 room	20+20	2.00	2.00	-	3.0	4.0	5.6	570	800	1750	3.7	3.5	3.4
		20+25	2.00	2.50	-	3.0	4.5	5.8	570	1050	1910	4.8	4.6	4.4
		20+35	1.93	3.37	-	3.0	5.3	6.1	570	1620	2110	7.4	7.1	6.8
		20+50	1.89	4.71	-	3.0	6.6	6.8	570	2330	2390	10.7	10.2	9.8
		20+60	1.68	5.03	-	3.0	6.7	6.8	570	2370	2390	10.9	10.4	10.0
		25+25	2.45	2.45	-	3.0	4.9	6.1	570	1340	2110	6.2	5.9	5.6
		25+35	2.42	3.38	-	3.0	5.8	6.4	570	1920	2270	8.8	8.4	8.1
		25+50	2.23	4.47	-	3.0	6.7	6.8	570	2370	2390	10.9	10.4	10.0
		25+60	1.97	4.73	-	3.0	6.7	6.8	570	2370	2390	10.9	10.4	10.0
		35+35	3.30	3.30	-	3.0	6.6	6.8	570	2330	2390	10.7	10.2	9.8
		35+50	2.76	3.94	-	3.0	6.7	6.8	570	2370	2390	10.9	10.4	10.0
		35+60	2.47	4.23	-	3.0	6.7	6.8	570	2370	2390	10.9	10.4	10.0
		50+50	3.35	3.35	-	3.0	6.7	6.8	570	2370	2390	10.9	10.4	10.0
		50+60	3.05	3.65	-	3.0	6.7	6.8	570	2370	2390	10.9	10.4	10.0
	3 room	20+20+20	2.00	2.00	2.00	3.6	6.0	7.3	690	1470	2390	6.7	6.5	6.2
		20+20+25	1.85	1.85	2.31	3.6	6.0	7.3	690	1470	2390	6.7	6.5	6.2
		20+20+35	1.60	1.60	2.80	3.6	6.0	7.3	690	1470	2390	6.7	6.5	6.2
		20+20+50	1.40	1.40	3.50	3.6	6.3	7.3	690	1520	2390	7.0	6.7	6.4
		20+20+60	1.28	1.28	3.84	3.6	6.4	7.3	690	1540	2390	7.1	6.8	6.5
		20+25+25	1.69	2.11	2.11	3.6	5.9	7.3	690	1450	2390	6.7	6.4	6.1
		20+25+35	1.53	1.91	2.67	3.6	6.1	7.3	690	1500	2390	6.9	6.6	6.3
		20+25+50	1.35	1.68	3.37	3.6	6.4	7.3	690	1540	2390	7.1	6.8	6.5
		20+25+60	1.26	1.57	3.77	3.6	6.6	7.3	690	1560	2390	7.2	6.9	6.6
		20+35+35	1.40	2.45	2.45	3.6	6.3	7.3	690	1520	2390	7.0	6.7	6.4
		20+35+50	1.26	2.20	3.14	3.6	6.6	7.3	690	1560	2390	7.2	6.9	6.6
		25+25+25	2.00	2.00	2.00	3.6	6.0	7.3	690	1470	2390	6.7	6.5	6.2
		25+25+35	1.79	1.79	2.51	3.6	6.1	7.3	690	1500	2390	6.9	6.6	6.3
		25+25+50	1.60	1.60	3.20	3.6	6.4	7.3	690	1540	2390	7.1	6.8	6.5
		25+25+60	1.52	1.52	3.65	3.6	6.7	7.3	690	1580	2390	7.3	6.9	6.6
		25+35+35	1.68	2.36	2.36	3.6	6.4	7.3	690	1540	2390	7.1	6.8	6.5
		25+35+50	1.52	2.13	3.05	3.6	6.7	7.3	690	1580	2390	7.3	6.9	6.6
		35+35+35	2.20	2.20	2.20	3.6	6.6	7.3	690	1560	2390	7.2	6.9	6.6

MULTI-SPLIT SYSTEM

SCM71ZM-S1 Table of Indoor unit combination with all indoor unit SRK-ZSX type only

Indoor unit combination			Heating capacity (kW)							Power consumption(W)			Standard current(A)		
			Room heating capacity				Total capacity								
			A	B	C	D	Min.	Standard	Max.	Min.	Standard	Max.	220V	230V	240V
Heating operation	1 room	20	3.0	-	-	-	1.5	3.0	3.7	600	840	1330	3.9	3.7	3.5
		25	3.4	-	-	-	1.5	3.4	4.2	600	1000	1510	4.6	4.4	4.2
		35	4.5	-	-	-	1.5	4.5	5.0	600	1330	1790	6.1	5.8	5.6
		50	5.8	-	-	-	1.5	5.8	6.5	600	1780	2310	8.2	7.8	7.5
		60	6.8	-	-	-	1.5	6.8	7.5	600	2100	2660	9.6	9.2	8.8
	2 room	20 + 20	2.70	2.70	-	-	2.1	5.4	7.4	630	1340	1870	6.2	5.9	5.6
		20 + 25	2.62	3.28	-	-	2.1	5.9	7.7	630	1530	2130	7.0	6.7	6.4
		20 + 35	2.51	4.39	-	-	2.1	6.9	8.3	630	1910	2650	8.8	8.4	8.0
		20 + 50	2.34	5.86	-	-	2.1	8.2	8.7	630	2430	3350	11.2	10.7	10.2
		20 + 60	2.05	6.15	-	-	2.1	8.2	8.7	630	2430	3350	11.2	10.7	10.2
		25 + 25	3.20	3.20	-	-	2.1	6.4	8.1	630	1700	2480	7.8	7.5	7.2
		25 + 35	3.08	4.32	-	-	2.1	7.4	8.6	630	2090	2910	9.6	9.2	8.8
		25 + 50	2.73	5.47	-	-	2.1	8.2	8.7	630	2430	3350	11.2	10.7	10.2
		25 + 60	2.41	5.79	-	-	2.1	8.2	8.7	630	2430	3350	11.2	10.7	10.2
		35 + 35	4.10	4.10	-	-	2.1	8.2	8.7	630	2430	3350	11.2	10.7	10.2
		35 + 50	3.38	4.82	-	-	2.1	8.2	8.7	630	2430	3350	11.2	10.7	10.2
		35 + 60	3.02	5.18	-	-	2.1	8.2	8.7	630	2430	3350	11.2	10.7	10.2
		50 + 50	4.10	4.10	-	-	2.1	8.2	8.7	630	2430	3350	11.2	10.7	10.2
		50 + 60	3.73	4.47	-	-	2.1	8.2	8.7	630	2430	3350	11.2	10.7	10.2
		60 + 60	4.10	4.10	-	-	2.1	8.2	8.7	630	2430	3350	11.2	10.7	10.2
	3 room	20 + 20 + 20	2.57	2.57	2.57	-	3.2	7.7	9.1	660	1830	3350	8.4	8.0	7.7
		20 + 20 + 25	2.46	2.46	3.08	-	3.2	8.0	9.1	660	1930	3350	8.9	8.5	8.1
		20 + 20 + 35	2.24	2.24	3.92	-	3.2	8.4	9.1	660	2060	3350	9.5	9.0	8.7
		20 + 20 + 50	1.87	1.87	4.67	-	3.2	8.4	9.1	660	2060	3350	9.5	9.0	8.7
		20 + 20 + 60	1.68	1.68	5.04	-	3.2	8.4	9.1	660	2060	3350	9.5	9.0	8.7
		20 + 25 + 25	2.34	2.93	2.93	-	3.2	8.2	9.1	660	1990	3350	9.1	8.7	8.4
		20 + 25 + 35	2.10	2.63	3.68	-	3.2	8.4	9.1	660	2060	3350	9.5	9.0	8.7
		20 + 25 + 50	1.77	2.21	4.42	-	3.2	8.4	9.1	660	2060	3350	9.5	9.0	8.7
		20 + 25 + 60	1.60	2.00	4.80	-	3.2	8.4	9.1	660	2060	3350	9.5	9.0	8.7
		20 + 35 + 35	1.87	3.27	3.27	-	3.2	8.4	9.1	660	2060	3350	9.5	9.0	8.7
		20 + 35 + 50	1.60	2.80	4.00	-	3.2	8.4	9.1	660	2060	3350	9.5	9.0	8.7
		20 + 35 + 60	1.46	2.56	4.38	-	3.2	8.4	9.1	660	2060	3350	9.5	9.0	8.7
		20 + 50 + 50	1.40	3.50	3.50	-	3.2	8.4	9.1	660	2060	3350	9.5	9.0	8.7
		25 + 25 + 25	2.80	2.80	2.80	-	3.2	8.4	9.1	660	2060	3350	9.5	9.0	8.7
		25 + 25 + 35	2.47	2.47	3.46	-	3.2	8.4	9.1	660	2060	3350	9.5	9.0	8.7
		25 + 25 + 50	2.10	2.10	4.20	-	3.2	8.4	9.1	660	2060	3350	9.5	9.0	8.7
		25 + 25 + 60	1.91	1.91	4.58	-	3.2	8.4	9.1	660	2060	3350	9.5	9.0	8.7
		25 + 35 + 35	2.21	3.09	3.09	-	3.2	8.4	9.1	660	2060	3350	9.5	9.0	8.7
		25 + 35 + 50	1.91	2.67	3.82	-	3.2	8.4	9.1	660	2060	3350	9.5	9.0	8.7
		25 + 35 + 60	1.75	2.45	4.20	-	3.2	8.4	9.1	660	2060	3350	9.5	9.0	8.7
		25 + 50 + 50	1.68	3.36	3.36	-	3.2	8.4	9.1	660	2060	3350	9.5	9.0	8.7
		35 + 35 + 35	2.80	2.80	2.80	-	3.2	8.4	9.1	660	2060	3350	9.5	9.0	8.7
		35 + 35 + 50	2.45	2.45	3.50	-	3.2	8.4	9.1	660	2060	3350	9.5	9.0	8.7
	4 room	20 + 20 + 20 + 20	2.10	2.10	2.10	2.10	3.6	8.4	9.4	800	1960	3350	9.0	8.6	8.2
		20 + 20 + 20 + 25	1.98	1.98	1.98	2.47	3.6	8.4	9.4	800	1960	3350	9.0	8.6	8.2
		20 + 20 + 20 + 35	1.79	1.79	1.79	3.13	3.6	8.5	9.4	800	1980	3350	9.1	8.7	8.3
		20 + 20 + 20 + 50	1.56	1.56	1.56	3.91	3.6	8.6	9.4	800	2000	3350	9.2	8.8	8.4
		20 + 20 + 20 + 60	1.43	1.43	1.43	4.30	3.6	8.6	9.4	800	2000	3350	9.2	8.8	8.4
		20 + 20 + 25 + 25	1.89	1.89	2.36	2.36	3.6	8.5	9.4	800	1980	3350	9.1	8.7	8.3
		20 + 20 + 25 + 35	1.70	1.70	2.13	2.98	3.6	8.5	9.4	800	1980	3350	9.1	8.7	8.3
		20 + 20 + 25 + 50	1.50	1.50	1.87	3.74	3.6	8.6	9.4	800	2000	3350	9.2	8.8	8.4
		20 + 20 + 25 + 60	1.38	1.38	1.72	4.13	3.6	8.6	9.4	800	2000	3350	9.2	8.8	8.4
		20 + 20 + 35 + 35	1.56	1.56	2.74	2.74	3.6	8.6	9.4	800	2000	3350	9.2	8.8	8.4
		20 + 20 + 35 + 50	1.38	1.38	2.41	3.44	3.6	8.6	9.4	800	2000	3350	9.2	8.8	8.4
		20 + 25 + 25 + 25	1.79	2.24	2.24	2.24	3.6	8.5	9.4	800	1980	3350	9.1	8.7	8.3
		20 + 25 + 25 + 35	1.64	2.05	2.05	2.87	3.6	8.6	9.4	800	2000	3350	9.2	8.8	8.4
		20 + 25 + 25 + 50	1.43	1.79	1.79	3.58	3.6	8.6	9.4	800	2000	3350	9.2	8.8	8.4
		20 + 25 + 35 + 35	1.50	1.87	2.62	2.62	3.6	8.6	9.4	800	2000	3350	9.2	8.8	8.4
		20 + 35 + 35 + 35	1.38	2.41	2.41	2.41	3.6	8.6	9.4	800	2000	3350	9.2	8.8	8.4
		25 + 25 + 25 + 25	2.13	2.13	2.13	2.13	3.6	8.5	9.4	800	1980	3350	9.1	8.7	8.3
		25 + 25 + 25 + 35	1.95	1.95	1.95	2.74	3.6	8.6	9.4	800	2000	3350	9.2	8.8	8.4
		25 + 25 + 25 + 50	1.72	1.72	1.72	3.44	3.6	8.6	9.4	800	2000	3350	9.2	8.8	8.4
		25 + 25 + 35 + 35	1.79	1.79	2.51	2.51	3.6	8.6	9.4	800	2000	3350	9.2	8.8	8.4

COMBINATIONS

Indoor unit combination			Cooling capacity (kW)							Power consumption(W)			Standard current(A)		
			Room cooling capacity				Total capacity								
			A	B	C	D	Min.	Standard	Max.	Min.	Standard	Max.	220V	230V	240V
Cooling operation	1 room	20	2.0	-	-	-	1.8	2.0	2.8	480	500	950	2.3	2.2	2.1
		25	2.5	-	-	-	1.8	2.5	3.4	480	680	1080	3.1	3.0	2.9
		35	3.5	-	-	-	1.8	3.5	3.9	480	1010	1240	4.6	4.4	4.3
		50	5.0	-	-	-	1.8	5.0	6.1	480	1530	2100	7.0	6.7	6.4
		60	6.0	-	-	-	1.8	6.0	7.0	480	1880	2700	8.6	8.3	7.9
	2 room	20 + 20	2.00	2.00	-	-	3.0	4.0	6.1	550	830	1910	3.8	3.6	3.5
		20 + 25	2.00	2.50	-	-	3.0	4.5	6.4	550	1030	2060	4.7	4.5	4.3
		20 + 35	2.00	3.50	-	-	3.0	5.5	6.9	550	1390	2320	6.4	6.1	5.9
		20 + 50	1.94	4.86	-	-	3.0	6.8	7.7	550	1860	2750	8.5	8.2	7.8
		20 + 60	1.70	5.10	-	-	3.0	6.8	7.7	550	1860	2750	8.5	8.2	7.8
		25 + 25	2.50	2.50	-	-	3.0	5.0	6.8	550	1190	2270	5.5	5.2	5.0
		25 + 35	2.46	3.44	-	-	3.0	5.9	7.2	550	1560	2470	7.2	6.9	6.6
		25 + 50	2.27	4.53	-	-	3.0	6.8	7.7	550	1860	2750	8.5	8.2	7.8
		25 + 60	2.00	4.80	-	-	3.0	6.8	7.7	550	1860	2750	8.5	8.2	7.8
		35 + 35	3.40	3.40	-	-	3.0	6.8	7.6	550	1860	2680	8.5	8.2	7.8
		35 + 50	2.80	4.00	-	-	3.0	6.8	7.7	550	1860	2750	8.5	8.2	7.8
		35 + 60	2.51	4.29	-	-	3.0	6.8	7.7	550	1860	2750	8.5	8.2	7.8
		50 + 50	3.40	3.40	-	-	3.0	6.8	7.7	550	1860	2750	8.5	8.2	7.8
		50 + 60	3.09	3.71	-	-	3.0	6.8	7.7	550	1860	2750	8.5	8.2	7.8
		60 + 60	3.40	3.40	-	-	3.0	6.8	7.7	550	1860	2750	8.5	8.2	7.8
	3 room	20 + 20 + 20	2.00	2.00	2.00	-	3.7	6.0	8.2	670	1300	2750	6.0	5.7	5.5
		20 + 20 + 25	2.00	2.00	2.50	-	3.7	6.5	8.2	670	1450	2750	6.7	6.4	6.1
		20 + 20 + 35	1.84	1.84	3.22	-	3.7	6.9	8.2	670	1670	2750	7.7	7.3	7.0
		20 + 20 + 50	1.53	1.53	3.83	-	3.7	6.9	8.2	670	1670	2750	7.7	7.3	7.0
		20 + 20 + 60	1.38	1.38	4.14	-	3.7	6.9	8.2	670	1670	2750	7.7	7.3	7.0
		20 + 25 + 25	1.94	2.43	2.43	-	3.7	6.8	8.2	670	1610	2750	7.4	7.1	6.8
		20 + 25 + 35	1.73	2.16	3.02	-	3.7	6.9	8.2	670	1670	2750	7.7	7.3	7.0
		20 + 25 + 50	1.45	1.82	3.63	-	3.7	6.9	8.2	670	1670	2750	7.7	7.3	7.0
		20 + 25 + 60	1.31	1.64	3.94	-	3.7	6.9	8.2	670	1670	2750	7.7	7.3	7.0
		20 + 35 + 35	1.53	2.68	2.68	-	3.7	6.9	8.2	670	1670	2750	7.7	7.3	7.0
		20 + 35 + 50	1.31	2.30	3.29	-	3.7	6.9	8.2	670	1670	2750	7.7	7.3	7.0
		20 + 35 + 60	1.20	2.10	3.60	-	3.7	6.9	8.2	670	1670	2750	7.7	7.3	7.0
		20 + 50 + 50	1.15	2.88	2.88	-	3.7	6.9	8.2	670	1670	2750	7.7	7.3	7.0
		25 + 25 + 25	2.30	2.30	2.30	-	3.7	6.9	8.2	670	1670	2750	7.7	7.3	7.0
		25 + 25 + 35	2.03	2.03	2.84	-	3.7	6.9	8.2	670	1670	2750	7.7	7.3	7.0
		25 + 25 + 50	1.73	1.73	3.45	-	3.7	6.9	8.2	670	1670	2750	7.7	7.3	7.0
		25 + 25 + 60	1.57	1.57	3.76	-	3.7	6.9	8.2	670	1670	2750	7.7	7.3	7.0
		25 + 35 + 35	1.82	2.54	2.54	-	3.7	6.9	8.2	670	1670	2750	7.7	7.3	7.0
		25 + 35 + 50	1.57	2.20	3.14	-	3.7	6.9	8.2	670	1670	2750	7.7	7.3	7.0
		25 + 35 + 60	1.44	2.01	3.45	-	3.7	6.9	8.2	670	1670	2750	7.7	7.3	7.0
		25 + 50 + 50	1.38	2.76	2.76	-	3.7	6.9	8.2	670	1670	2750	7.7	7.3	7.0
		35 + 35 + 35	2.30	2.30	2.30	-	3.7	6.9	8.2	670	1670	2750	7.7	7.3	7.0
		35 + 35 + 50	2.01	2.01	2.88	-	3.7	6.9	8.2	670	1670	2750	7.7	7.3	7.0
	4 room	20 + 20 + 20 + 20	1.73	1.73	1.73	1.73	4.4	6.9	8.8	890	1550	2750	7.1	6.8	6.5
		20 + 20 + 20 + 25	1.62	1.62	1.62	2.03	4.4	6.9	8.8	890	1550	2750	7.1	6.8	6.5
		20 + 20 + 20 + 35	1.49	1.49	1.49	2.62	4.4	7.1	8.8	890	1580	2750	7.3	6.9	6.6
		20 + 20 + 20 + 50	1.29	1.29	1.29	3.23	4.4	7.1	8.8	890	1580	2750	7.3	6.9	6.6
		20 + 20 + 20 + 60	1.18	1.18	1.18	3.55	4.4	7.1	8.8	890	1580	2750	7.3	6.9	6.6
		20 + 20 + 25 + 25	1.53	1.53	1.92	1.92	4.4	6.9	8.8	890	1550	2750	7.1	6.8	6.5
		20 + 20 + 25 + 35	1.42	1.42	1.78	2.49	4.4	7.1	8.8	890	1580	2750	7.3	6.9	6.6
		20 + 20 + 25 + 50	1.23	1.23	1.54	3.09	4.4	7.1	8.8	890	1580	2750	7.3	6.9	6.6
		20 + 20 + 25 + 60	1.14	1.14	1.42	3.41	4.4	7.1	8.8	890	1580	2750	7.3	6.9	6.6
		20 + 20 + 35 + 35	1.29	1.29	2.26	2.26	4.4	7.1	8.8	890	1580	2750	7.3	6.9	6.6
		20 + 20 + 35 + 50	1.14	1.14	1.99	2.84	4.4	7.1	8.8	890	1580	2750	7.3	6.9	6.6
		20 + 25 + 25 + 25	1.49	1.87	1.87	1.87	4.4	7.1	8.8	890	1580	2750	7.3	6.9	6.6
		20 + 25 + 25 + 35	1.35	1.69	1.69	2.37	4.4	7.1	8.8	890	1580	2750	7.3	6.9	6.6
		20 + 25 + 25 + 50	1.18	1.48	1.48	2.96	4.4	7.1	8.8	890	1580	2750	7.3	6.9	6.6
		20 + 25 + 35 + 35	1.23	1.54	2.16	2.16	4.4	7.1	8.8	890	1580	2750	7.3	6.9	6.6
		20 + 35 + 35 + 35	1.14	1.99	1.99	1.99	4.4	7.1	8.8	890	1580	2750	7.3	6.9	6.6
		25 + 25 + 25 + 25	1.78	1.78	1.78	1.78	4.4	7.1	8.8	890	1580	2750	7.3	6.9	6.6
		25 + 25 + 25 + 35	1.61	1.61	1.61	2.26	4.4	7.1	8.8	890	1580	2750	7.3	6.9	6.6
		25 + 25 + 25 + 50	1.42	1.42	1.42	2.84	4.4	7.1	8.8	890	1580	2750	7.3	6.9	6.6
		25 + 25 + 35 + 35	1.48	1.48	2.07	2.07	4.4	7.1	8.8	890	1580	2750	7.3	6.9	6.6

SCM71ZM-S1 Table of Indoor unit combination with other indoor unit

Indoor unit combination			Heating capacity (kW)							Power consumption(W)			Standard current(A)		
			Room heating capacity				Total capacity								
			A	B	C	D	Min.	Standard	Max.	Min.	Standard	Max.	220V	230V	240V
Heating operation	1 room	20	3.0	-	-	-	1.5	3.0	3.5	600	1060	1330	4.9	4.7	4.5
		25	3.4	-	-	-	1.5	3.4	4.0	600	1220	1510	5.6	5.4	5.1
		35	4.5	-	-	-	1.5	4.5	4.8	600	1510	1790	6.9	6.6	6.4
		50	5.8	-	-	-	1.5	5.8	6.2	600	1950	2310	9.0	8.6	8.2
		60	6.8	-	-	-	1.5	6.8	7.1	600	2240	2660	10.3	9.8	9.4
	2 room	20 + 20	2.70	2.70	-	-	2.1	5.4	7.0	630	1370	1870	6.3	6.0	5.8
		20 + 25	2.62	3.28	-	-	2.1	5.9	7.3	630	1560	2130	7.2	6.9	6.6
		20 + 35	2.51	4.39	-	-	2.1	6.9	7.9	630	1950	2650	9.0	8.6	8.2
		20 + 50	2.34	5.86	-	-	2.1	8.2	8.3	630	2490	3350	11.4	10.9	10.5
		20 + 60	2.05	6.15	-	-	2.1	8.2	8.3	630	2490	3350	11.4	10.9	10.5
		25 + 25	3.20	3.20	-	-	2.1	6.4	7.7	630	1740	2480	8.0	7.6	7.3
		25 + 35	3.08	4.32	-	-	2.1	7.4	8.2	630	2130	2910	9.8	9.4	9.0
		25 + 50	2.73	5.47	-	-	2.1	8.2	8.3	630	2490	3350	11.4	10.9	10.5
		25 + 60	2.41	5.79	-	-	2.1	8.2	8.3	630	2490	3350	11.4	10.9	10.5
		35 + 35	4.10	4.10	-	-	2.1	8.2	8.3	630	2490	3350	11.4	10.9	10.5
		35 + 50	3.38	4.82	-	-	2.1	8.2	8.3	630	2490	3350	11.4	10.9	10.5
		35 + 60	3.02	5.18	-	-	2.1	8.2	8.3	630	2490	3350	11.4	10.9	10.5
		50 + 50	4.10	4.10	-	-	2.1	8.2	8.3	630	2490	3350	11.4	10.9	10.5
		50 + 60	3.73	4.47	-	-	2.1	8.2	8.3	630	2490	3350	11.4	10.9	10.5
		60 + 60	4.10	4.10	-	-	2.1	8.2	8.3	630	2490	3350	11.4	10.9	10.5
	3 room	20 + 20 + 20	2.57	2.57	2.57	-	3.2	7.7	8.9	660	1870	3350	8.6	8.2	7.9
		20 + 20 + 25	2.46	2.46	3.08	-	3.2	8.0	8.9	660	1970	3350	9.0	8.7	8.3
		20 + 20 + 35	2.24	2.24	3.92	-	3.2	8.4	8.9	660	2100	3350	9.6	9.2	8.8
		20 + 20 + 50	1.87	1.87	4.67	-	3.2	8.4	8.9	660	2100	3350	9.6	9.2	8.8
		20 + 20 + 60	1.68	1.68	5.04	-	3.2	8.4	8.9	660	2100	3350	9.6	9.2	8.8
		20 + 25 + 25	2.34	2.93	2.93	-	3.2	8.2	8.9	660	2030	3350	9.3	8.9	8.5
		20 + 25 + 35	2.10	2.63	3.68	-	3.2	8.4	8.9	660	2100	3350	9.6	9.2	8.8
		20 + 25 + 50	1.77	2.21	4.42	-	3.2	8.4	8.9	660	2100	3350	9.6	9.2	8.8
		20 + 25 + 60	1.60	2.00	4.80	-	3.2	8.4	8.9	660	2100	3350	9.6	9.2	8.8
		20 + 35 + 35	1.87	3.27	3.27	-	3.2	8.4	8.9	660	2100	3350	9.6	9.2	8.8
		20 + 35 + 50	1.60	2.80	4.00	-	3.2	8.4	8.9	660	2100	3350	9.6	9.2	8.8
		20 + 35 + 60	1.46	2.56	4.38	-	3.2	8.4	8.9	660	2100	3350	9.6	9.2	8.8
		20 + 50 + 50	1.40	3.50	3.50	-	3.2	8.4	8.9	660	2100	3350	9.6	9.2	8.8
		25 + 25 + 25	2.80	2.80	2.80	-	3.2	8.4	8.9	660	2100	3350	9.6	9.2	8.8
		25 + 25 + 35	2.47	2.47	3.46	-	3.2	8.4	8.9	660	2100	3350	9.6	9.2	8.8
		25 + 25 + 50	2.10	2.10	4.20	-	3.2	8.4	8.9	660	2100	3350	9.6	9.2	8.8
		25 + 25 + 60	1.91	1.91	4.58	-	3.2	8.4	8.9	660	2100	3350	9.6	9.2	8.8
		25 + 35 + 35	2.21	3.09	3.09	-	3.2	8.4	8.9	660	2100	3350	9.6	9.2	8.8
		25 + 35 + 50	1.91	2.67	3.82	-	3.2	8.4	8.9	660	2100	3350	9.6	9.2	8.8
		25 + 35 + 60	1.75	2.45	4.20	-	3.2	8.4	8.9	660	2100	3350	9.6	9.2	8.8
		25 + 50 + 50	1.68	3.36	3.36	-	3.2	8.4	8.9	660	2100	3350	9.6	9.2	8.8
		35 + 35 + 35	2.80	2.80	2.80	-	3.2	8.4	8.9	660	2100	3350	9.6	9.2	8.8
		35 + 35 + 50	2.45	2.45	3.50	-	3.2	8.4	8.9	660	2100	3350	9.6	9.2	8.8
	4 room	20 + 20 + 20 + 20	2.10	2.10	2.10	2.10	3.6	8.4	9.1	800	2010	3350	9.2	8.8	8.5
		20 + 20 + 20 + 25	1.98	1.98	1.98	2.47	3.6	8.4	9.1	800	2010	3350	9.2	8.8	8.5
		20 + 20 + 20 + 35	1.79	1.79	1.79	3.13	3.6	8.5	9.1	800	2030	3350	9.3	8.9	8.5
		20 + 20 + 20 + 50	1.56	1.56	1.56	3.91	3.6	8.6	9.1	800	2050	3350	9.4	9.0	8.6
		20 + 20 + 20 + 60	1.43	1.43	1.43	4.30	3.6	8.6	9.1	800	2050	3350	9.4	9.0	8.6
		20 + 20 + 25 + 25	1.89	1.89	2.36	2.36	3.6	8.5	9.1	800	2030	3350	9.3	8.9	8.5
		20 + 20 + 25 + 35	1.70	1.70	2.13	2.98	3.6	8.5	9.1	800	2030	3350	9.3	8.9	8.5
		20 + 20 + 25 + 50	1.50	1.50	1.87	3.74	3.6	8.6	9.1	800	2050	3350	9.4	9.0	8.6
		20 + 20 + 25 + 60	1.38	1.38	1.72	4.13	3.6	8.6	9.1	800	2050	3350	9.4	9.0	8.6
		20 + 20 + 35 + 35	1.56	1.56	2.74	2.74	3.6	8.6	9.1	800	2050	3350	9.4	9.0	8.6
		20 + 20 + 35 + 50	1.38	1.38	2.41	3.44	3.6	8.6	9.1	800	2050	3350	9.4	9.0	8.6
		20 + 25 + 25 + 25	1.79	2.24	2.24	2.24	3.6	8.5	9.1	800	2030	3350	9.3	8.9	8.5
		20 + 25 + 25 + 35	1.64	2.05	2.05	2.87	3.6	8.6	9.1	800	2050	3350	9.4	9.0	8.6
		20 + 25 + 25 + 50	1.43	1.79	1.79	3.58	3.6	8.6	9.1	800	2050	3350	9.4	9.0	8.6
		20 + 25 + 35 + 35	1.50	1.87	2.62	2.62	3.6	8.6	9.1	800	2050	3350	9.4	9.0	8.6
		20 + 35 + 35 + 35	1.38	2.41	2.41	2.41	3.6	8.6	9.1	800	2050	3350	9.4	9.0	8.6
		25 + 25 + 25 + 25	2.13	2.13	2.13	2.13	3.6	8.5	9.1	800	2030	3350	9.3	8.9	8.5
		25 + 25 + 25 + 35	1.95	1.95	1.95	2.74	3.6	8.6	9.1	800	2050	3350	9.4	9.0	8.6
		25 + 25 + 25 + 50	1.72	1.72	1.72	3.44	3.6	8.6	9.1	800	2050	3350	9.4	9.0	8.6
		25 + 25 + 35 + 35	1.79	1.79	2.51	2.51	3.6	8.6	9.1	800	2050	3350	9.4	9.0	8.6

COMBINATIONS

Indoor unit combination			Cooling capacity (kW)							Power consumption(W)			Standard current(A)		
			Room cooling capacity				Total capacity								
			A	B	C	D	Min.	Standard	Max.	Min.	Standard	Max.	220V	230V	240V
Cooling operation	1 room	20	2.0	-	-	-	1.8	2.0	2.7	480	530	950	2.4	2.3	2.2
		25	2.5	-	-	-	1.8	2.5	3.2	480	730	1080	3.4	3.2	3.1
		35	3.5	-	-	-	1.8	3.5	3.7	480	1120	1240	5.1	4.9	4.7
		50	5.0	-	-	-	1.8	5.0	5.8	480	1710	2100	7.9	7.5	7.2
		60	6.0	-	-	-	1.8	6.0	6.7	480	2140	2700	9.8	9.4	9.0
	2 room	20 + 20	2.00	2.00	-	-	3.0	4.0	5.8	550	930	1910	4.3	4.1	3.9
		20 + 25	2.00	2.50	-	-	3.0	4.5	6.1	550	1170	2060	5.4	5.1	4.9
		20 + 35	2.00	3.50	-	-	3.0	5.5	6.6	550	1590	2320	7.3	7.0	6.7
		20 + 50	1.94	4.86	-	-	3.0	6.8	7.3	550	2150	2750	9.9	9.4	9.0
		20 + 60	1.70	5.10	-	-	3.0	6.8	7.3	550	2150	2750	9.9	9.4	9.0
		25 + 25	2.50	2.50	-	-	3.0	5.0	6.5	550	1360	2270	6.2	6.0	5.7
		25 + 35	2.46	3.44	-	-	3.0	5.9	6.8	550	1780	2470	8.2	7.8	7.5
		25 + 50	2.27	4.53	-	-	3.0	6.8	7.3	550	2150	2750	9.9	9.4	9.0
		25 + 60	2.00	4.80	-	-	3.0	6.8	7.3	550	2150	2750	9.9	9.4	9.0
		35 + 35	3.40	3.40	-	-	3.0	6.8	7.2	550	2150	2680	9.9	9.4	9.0
		35 + 50	2.80	4.00	-	-	3.0	6.8	7.3	550	2150	2750	9.9	9.4	9.0
		35 + 60	2.51	4.29	-	-	3.0	6.8	7.3	550	2150	2750	9.9	9.4	9.0
		50 + 50	3.40	3.40	-	-	3.0	6.8	7.3	550	2150	2750	9.9	9.4	9.0
		50 + 60	3.09	3.71	-	-	3.0	6.8	7.3	550	2150	2750	9.9	9.4	9.0
		60 + 60	3.40	3.40	-	-	3.0	6.8	7.3	550	2150	2750	9.9	9.4	9.0
	3 room	20 + 20 + 20	2.00	2.00	2.00	-	3.7	6.0	7.8	670	1450	2750	6.7	6.4	6.1
		20 + 20 + 25	2.00	2.00	2.50	-	3.7	6.5	7.8	670	1630	2750	7.5	7.2	6.9
		20 + 20 + 35	1.84	1.84	3.22	-	3.7	6.9	7.8	670	1910	2750	8.8	8.4	8.0
		20 + 20 + 50	1.53	1.53	3.83	-	3.7	6.9	7.8	670	1910	2750	8.8	8.4	8.0
		20 + 20 + 60	1.38	1.38	4.14	-	3.7	6.9	7.8	670	1910	2750	8.8	8.4	8.0
		20 + 25 + 25	1.94	2.43	2.43	-	3.7	6.8	7.8	670	1820	2750	8.4	8.0	7.7
		20 + 25 + 35	1.73	2.16	3.02	-	3.7	6.9	7.8	670	1910	2750	8.8	8.4	8.0
		20 + 25 + 50	1.45	1.82	3.63	-	3.7	6.9	7.8	670	1910	2750	8.8	8.4	8.0
		20 + 25 + 60	1.31	1.64	3.94	-	3.7	6.9	7.8	670	1910	2750	8.8	8.4	8.0
		20 + 35 + 35	1.53	2.68	2.68	-	3.7	6.9	7.8	670	1910	2750	8.8	8.4	8.0
		20 + 35 + 50	1.31	2.30	3.29	-	3.7	6.9	7.8	670	1910	2750	8.8	8.4	8.0
		20 + 35 + 60	1.20	2.10	3.60	-	3.7	6.9	7.8	670	1910	2750	8.8	8.4	8.0
		20 + 50 + 50	1.15	2.88	2.88	-	3.7	6.9	7.8	670	1910	2750	8.8	8.4	8.0
		25 + 25 + 25	2.30	2.30	2.30	-	3.7	6.9	7.8	670	1910	2750	8.8	8.4	8.0
		25 + 25 + 35	2.03	2.03	2.84	-	3.7	6.9	7.8	670	1910	2750	8.8	8.4	8.0
		25 + 25 + 50	1.73	1.73	3.45	-	3.7	6.9	7.8	670	1910	2750	8.8	8.4	8.0
		25 + 25 + 60	1.57	1.57	3.76	-	3.7	6.9	7.8	670	1910	2750	8.8	8.4	8.0
		25 + 35 + 35	1.82	2.54	2.54	-	3.7	6.9	7.8	670	1910	2750	8.8	8.4	8.0
		25 + 35 + 50	1.57	2.20	3.14	-	3.7	6.9	7.8	670	1910	2750	8.8	8.4	8.0
		25 + 35 + 60	1.44	2.01	3.45	-	3.7	6.9	7.8	670	1910	2750	8.8	8.4	8.0
		25 + 50 + 50	1.38	2.76	2.76	-	3.7	6.9	7.8	670	1910	2750	8.8	8.4	8.0
		35 + 35 + 35	2.30	2.30	2.30	-	3.7	6.9	7.8	670	1910	2750	8.8	8.4	8.0
		35 + 35 + 50	2.01	2.01	2.88	-	3.7	6.9	7.8	670	1910	2750	8.8	8.4	8.0
	4 room	20 + 20 + 20 + 20	1.73	1.73	1.73	1.73	4.4	6.9	8.3	890	1750	2750	8.0	7.7	7.4
		20 + 20 + 20 + 25	1.62	1.62	1.62	2.03	4.4	6.9	8.3	890	1750	2750	8.0	7.7	7.4
		20 + 20 + 20 + 35	1.49	1.49	1.49	2.62	4.4	7.1	8.3	890	1790	2750	8.2	7.9	7.5
		20 + 20 + 20 + 50	1.29	1.29	1.29	3.23	4.4	7.1	8.3	890	1790	2750	8.2	7.9	7.5
		20 + 20 + 20 + 60	1.18	1.18	1.18	3.55	4.4	7.1	8.3	890	1790	2750	8.2	7.9	7.5
		20 + 20 + 25 + 25	1.53	1.53	1.92	1.92	4.4	6.9	8.3	890	1750	2750	8.0	7.7	7.4
		20 + 20 + 25 + 35	1.42	1.42	1.78	2.49	4.4	7.1	8.3	890	1790	2750	8.2	7.9	7.5
		20 + 20 + 25 + 50	1.23	1.23	1.54	3.09	4.4	7.1	8.3	890	1790	2750	8.2	7.9	7.5
		20 + 20 + 25 + 60	1.14	1.14	1.42	3.41	4.4	7.1	8.3	890	1790	2750	8.2	7.9	7.5
		20 + 20 + 35 + 35	1.29	1.29	2.26	2.26	4.4	7.1	8.3	890	1790	2750	8.2	7.9	7.5
		20 + 20 + 35 + 50	1.14	1.14	1.99	2.84	4.4	7.1	8.3	890	1790	2750	8.2	7.9	7.5
		20 + 25 + 25 + 25	1.49	1.87	1.87	1.87	4.4	7.1	8.3	890	1790	2750	8.2	7.9	7.5
		20 + 25 + 25 + 35	1.35	1.69	1.69	2.37	4.4	7.1	8.3	890	1790	2750	8.2	7.9	7.5
		20 + 25 + 25 + 50	1.18	1.48	1.48	2.96	4.4	7.1	8.3	890	1790	2750	8.2	7.9	7.5
		20 + 25 + 35 + 35	1.23	1.54	2.16	2.16	4.4	7.1	8.3	890	1790	2750	8.2	7.9	7.5
		20 + 35 + 35 + 35	1.14	1.99	1.99	1.99	4.4	7.1	8.3	890	1790	2750	8.2	7.9	7.5
		25 + 25 + 25 + 25	1.78	1.78	1.78	1.78	4.4	7.1	8.3	890	1790	2750	8.2	7.9	7.5
		25 + 25 + 25 + 35	1.61	1.61	1.61	2.26	4.4	7.1	8.3	890	1790	2750	8.2	7.9	7.5
		25 + 25 + 25 + 50	1.42	1.42	1.42	2.84	4.4	7.1	8.3	890	1790	2750	8.2	7.9	7.5
		25 + 25 + 35 + 35	1.48	1.48	2.07	2.07	4.4	7.1	8.3	890	1790	2750	8.2	7.9	7.5

MULTI-SPLIT SYSTEM

SCM80ZM-S1 Table of Indoor unit combination with all indoor unit SRK-ZSX type only

Indoor unit combination			Heating capacity (kW)							Power consumption(W)			Standard current(A)		
			Room heating capacity				Total capacity								
			A	B	C	D	Min.	Standard	Max.	Min.	Standard	Max.	220V	230V	240V
Heating operation	1 room	20	3.0	-	-	-	1.5	3.0	3.7	600	840	1330	3.9	3.7	3.5
		25	3.4	-	-	-	1.5	3.4	4.2	600	1000	1510	4.6	4.4	4.2
		35	4.5	-	-	-	1.5	4.5	5.0	600	1330	1790	6.1	5.8	5.6
		50	5.8	-	-	-	1.5	5.8	6.5	600	1780	2310	8.2	7.8	7.5
		60	6.8	-	-	-	1.5	6.8	7.5	600	2100	2660	9.6	9.2	8.8
	2 room	20 + 20	2.70	2.70	-	-	2.1	5.4	7.4	630	1340	1870	6.2	5.9	5.6
		20 + 25	2.62	3.28	-	-	2.1	5.9	7.7	630	1530	2130	7.0	6.7	6.4
		20 + 35	2.51	4.39	-	-	2.1	6.9	8.3	630	1910	2650	8.8	8.4	8.0
		20 + 50	2.37	5.93	-	-	2.1	8.3	8.8	630	2460	3430	11.3	10.8	10.4
		20 + 60	2.08	6.23	-	-	2.1	8.3	8.8	630	2460	3430	11.3	10.8	10.4
		25 + 25	3.20	3.20	-	-	2.1	6.4	8.1	630	1700	2480	7.8	7.5	7.2
		25 + 35	3.08	4.32	-	-	2.1	7.4	8.6	630	2090	2910	9.6	9.2	8.8
		25 + 50	2.77	5.53	-	-	2.1	8.3	8.8	630	2460	3430	11.3	10.8	10.4
		25 + 60	2.44	5.86	-	-	2.1	8.3	8.8	630	2460	3430	11.3	10.8	10.4
		35 + 35	4.15	4.15	-	-	2.1	8.3	8.8	630	2460	3430	11.3	10.8	10.4
		35 + 50	3.42	4.88	-	-	2.1	8.3	8.8	630	2460	3430	11.3	10.8	10.4
		35 + 60	3.06	5.24	-	-	2.1	8.3	8.8	630	2460	3430	11.3	10.8	10.4
		50 + 50	4.15	4.15	-	-	2.1	8.3	8.8	630	2460	3430	11.3	10.8	10.4
		50 + 60	3.77	4.53	-	-	2.1	8.3	8.8	630	2460	3430	11.3	10.8	10.4
		60 + 60	4.15	4.15	-	-	2.1	8.3	8.8	630	2460	3430	11.3	10.8	10.4
	3 room	20 + 20 + 20	2.57	2.57	2.57	-	3.2	7.7	9.3	660	1830	3430	8.4	8.0	7.7
		20 + 20 + 25	2.46	2.46	3.08	-	3.2	8.0	9.3	660	1930	3430	8.9	8.5	8.1
		20 + 20 + 35	2.27	2.27	3.97	-	3.2	8.5	9.3	660	2090	3430	9.6	9.2	8.8
		20 + 20 + 50	2.00	2.00	5.00	-	3.2	9.0	9.3	660	2250	3430	10.3	9.9	9.5
		20 + 20 + 60	1.80	1.80	5.40	-	3.2	9.0	9.3	660	2250	3430	10.3	9.9	9.5
		20 + 25 + 25	2.34	2.93	2.93	-	3.2	8.2	9.3	660	1990	3430	9.1	8.7	8.4
		20 + 25 + 35	2.20	2.75	3.85	-	3.2	8.8	9.3	660	2180	3430	10.0	9.6	9.2
		20 + 25 + 50	1.89	2.37	4.74	-	3.2	9.0	9.3	660	2250	3430	10.3	9.9	9.5
		20 + 25 + 60	1.71	2.14	5.14	-	3.2	9.0	9.3	660	2250	3430	10.3	9.9	9.5
		20 + 35 + 35	2.00	3.50	3.50	-	3.2	9.0	9.3	660	2250	3430	10.3	9.9	9.5
		20 + 35 + 50	1.71	3.00	4.29	-	3.2	9.0	9.3	660	2250	3430	10.3	9.9	9.5
		20 + 35 + 60	1.57	2.74	4.70	-	3.2	9.0	9.3	660	2250	3430	10.3	9.9	9.5
		20 + 50 + 50	1.50	3.75	3.75	-	3.2	9.0	9.3	660	2250	3430	10.3	9.9	9.5
		20 + 50 + 60	1.38	3.46	4.15	-	3.2	9.0	9.3	660	2250	3430	10.3	9.9	9.5
		25 + 25 + 25	2.83	2.83	2.83	-	3.2	8.5	9.3	660	2090	3430	9.6	9.2	8.8
		25 + 25 + 35	2.65	2.65	3.71	-	3.2	9.0	9.3	660	2250	3430	10.3	9.9	9.5
		25 + 25 + 50	2.25	2.25	4.50	-	3.2	9.0	9.3	660	2250	3430	10.3	9.9	9.5
		25 + 25 + 60	2.05	2.05	4.91	-	3.2	9.0	9.3	660	2250	3430	10.3	9.9	9.5
		25 + 35 + 35	2.37	3.32	3.32	-	3.2	9.0	9.3	660	2250	3430	10.3	9.9	9.5
		25 + 35 + 50	2.05	2.86	4.09	-	3.2	9.0	9.3	660	2250	3430	10.3	9.9	9.5
		25 + 35 + 60	1.88	2.63	4.50	-	3.2	9.0	9.3	660	2250	3430	10.3	9.9	9.5
		25 + 50 + 50	1.80	3.60	3.60	-	3.2	9.0	9.3	660	2250	3430	10.3	9.9	9.5
		25 + 50 + 60	1.67	3.33	4.00	-	3.2	9.0	9.3	660	2250	3430	10.3	9.9	9.5
		35 + 35 + 35	3.00	3.00	3.00	-	3.2	9.0	9.3	660	2250	3430	10.3	9.9	9.5
		35 + 35 + 50	2.63	2.63	3.75	-	3.2	9.0	9.3	660	2250	3430	10.3	9.9	9.5
		35 + 35 + 60	2.42	2.42	4.15	-	3.2	9.0	9.3	660	2250	3430	10.3	9.9	9.5
		35 + 50 + 50	2.33	3.33	3.33	-	3.2	9.0	9.3	660	2250	3430	10.3	9.9	9.5
	4 room	20 + 20 + 20 + 20	2.28	2.28	2.28	2.28	3.6	9.1	9.8	800	2220	3430	10.2	9.7	9.3
		20 + 20 + 20 + 25	2.14	2.14	2.14	2.68	3.6	9.1	9.8	800	2220	3430	10.2	9.7	9.3
		20 + 20 + 20 + 35	1.94	1.94	1.94	3.39	3.6	9.2	9.8	800	2240	3430	10.3	9.8	9.4
		20 + 20 + 20 + 50	1.67	1.67	1.67	4.18	3.6	9.2	9.8	800	2240	3430	10.3	9.8	9.4
		20 + 20 + 20 + 60	1.55	1.55	1.55	4.65	3.6	9.3	9.8	800	2260	3430	10.4	10.0	9.5
		20 + 20 + 25 + 25	2.04	2.04	2.56	2.56	3.6	9.2	9.8	800	2240	3430	10.3	9.8	9.4
		20 + 20 + 25 + 35	1.84	1.84	2.30	3.22	3.6	9.2	9.8	800	2240	3430	10.3	9.8	9.4
		20 + 20 + 25 + 50	1.62	1.62	2.02	4.04	3.6	9.3	9.8	800	2260	3430	10.4	10.0	9.5
		20 + 20 + 25 + 60	1.49	1.49	1.86	4.46	3.6	9.3	9.8	800	2260	3430	10.4	10.0	9.5
		20 + 20 + 35 + 35	1.67	1.67	2.93	2.93	3.6	9.2	9.8	800	2240	3430	10.3	9.8	9.4
		20 + 20 + 35 + 50	1.49	1.49	2.60	3.72	3.6	9.3	9.8	800	2260	3430	10.4	10.0	9.5
		20 + 20 + 35 + 60	1.38	1.38	2.41	4.13	3.6	9.3	9.8	800	2260	3430	10.4	10.0	9.5
		20 + 25 + 25 + 25	1.94	2.42	2.42	2.42	3.6	9.2	9.8	800	2240	3430	10.3	9.8	9.4
		20 + 25 + 25 + 35	1.75	2.19	2.19	3.07	3.6	9.2	9.8	800	2240	3430	10.3	9.8	9.4
		20 + 25 + 25 + 50	1.55	1.94	1.94	3.88	3.6	9.3	9.8	800	2260	3430	10.4	10.0	9.5
		20 + 25 + 25 + 60	1.43	1.79	1.79	4.29	3.6	9.3	9.8	800	2260	3430	10.4	10.0	9.5
		20 + 25 + 35 + 35	1.62	2.02	2.83	2.83	3.6	9.3	9.8	800	2260	3430	10.4	10.0	9.5
		20 + 25 + 35 + 50	1.43	1.79	2.50	3.58	3.6	9.3	9.8	800	2260	3430	10.4	10.0	9.5
		20 + 35 + 35 + 35	1.49	2.60	2.60	2.60	3.6	9.3	9.8	800	2260	3430	10.4	10.0	9.5
		25 + 25 + 25 + 25	2.30	2.30	2.30	2.30	3.6	9.2	9.8	800	2240	3430	10.3	9.8	9.4
		25 + 25 + 25 + 35	2.09	2.09	2.09	2.93	3.6	9.2	9.8	800	2240	3430	10.3	9.8	9.4
		25 + 25 + 25 + 50	1.86	1.86	1.86	3.72	3.6	9.3	9.8	800	2260	3430	10.4	10.0	9.5
		25 + 25 + 25 + 60	1.72	1.72	1.72	4.13	3.6	9.3	9.8	800	2260	3430	10.4	10.0	9.5
		25 + 25 + 35 + 35	1.94	1.94	2.71	2.71	3.6	9.3	9.8	800	2260	3430	10.4	10.0	9.5
		25 + 25 + 35 + 50	1.72	1.72	2.41	3.44	3.6	9.3	9.8	800	2260	3430	10.4	10.0	9.5
		25 + 35 + 35 + 35	1.79	2.50	2.50	2.50	3.6	9.3	9.8	800	2260	3430	10.4	10.0	9.5

Indoor unit combination			Cooling capacity (kW)							Power consumption(W)			Standard current(A)		
			Room cooling capacity				Total capacity								
			A	B	C	D	Min.	Standard	Max.	Min.	Standard	Max.	220V	230V	240V
Cooling operation	1 room	20	2.0	-	-	-	1.8	2.0	2.8	480	500	950	2.3	2.2	2.1
		25	2.5	-	-	-	1.8	2.5	3.4	480	680	1080	3.1	3.0	2.9
		35	3.5	-	-	-	1.8	3.5	3.9	480	1010	1240	4.6	4.4	4.3
		50	5.0	-	-	-	1.8	5.0	6.1	480	1530	2100	7.0	6.7	6.4
		60	6.0	-	-	-	1.8	6.0	7.0	480	1880	2700	8.6	8.3	7.9
	2 room	20 + 20	2.00	2.00	-	-	3.0	4.0	6.1	550	830	1910	3.8	3.6	3.5
		20 + 25	2.00	2.50	-	-	3.0	4.5	6.4	550	1030	2060	4.7	4.5	4.3
		20 + 35	2.00	3.50	-	-	3.0	5.5	6.9	550	1390	2320	6.4	6.1	5.9
		20 + 50	1.97	4.93	-	-	3.0	6.9	7.9	550	1910	2830	8.8	8.4	8.0
		20 + 60	1.85	5.55	-	-	3.0	7.4	7.9	550	2090	2830	9.6	9.2	8.8
		25 + 25	2.50	2.50	-	-	3.0	5.0	6.8	550	1190	2270	5.5	5.2	5.0
		25 + 35	2.46	3.44	-	-	3.0	5.9	7.2	550	1560	2470	7.2	6.9	6.6
		25 + 50	2.47	4.93	-	-	3.0	7.4	7.9	550	2090	2830	9.6	9.2	8.8
		25 + 60	2.18	5.22	-	-	3.0	7.4	7.9	550	2090	2830	9.6	9.2	8.8
		35 + 35	3.45	3.45	-	-	3.0	6.9	7.6	550	1910	2680	8.8	8.4	8.0
		35 + 50	3.05	4.35	-	-	3.0	7.4	7.9	550	2090	2830	9.6	9.2	8.8
		35 + 60	2.73	4.67	-	-	3.0	7.4	7.9	550	2090	2830	9.6	9.2	8.8
		50 + 50	3.70	3.70	-	-	3.0	7.4	7.9	550	2090	2830	9.6	9.2	8.8
		50 + 60	3.36	4.04	-	-	3.0	7.4	7.9	550	2090	2830	9.6	9.2	8.8
		60 + 60	3.70	3.70	-	-	3.0	7.4	7.9	550	2090	2830	9.6	9.2	8.8
	3 room	20 + 20 + 20	2.00	2.00	2.00	-	3.7	6.0	8.5	670	1300	2830	6.0	5.7	5.5
		20 + 20 + 25	2.00	2.00	2.50	-	3.7	6.5	8.5	670	1450	2830	6.7	6.4	6.1
		20 + 20 + 35	1.89	1.89	3.31	-	3.7	7.1	8.5	670	1730	2830	7.9	7.6	7.3
		20 + 20 + 50	1.73	1.73	4.33	-	3.7	7.8	8.5	670	2030	2830	9.3	8.9	8.5
		20 + 20 + 60	1.56	1.56	4.68	-	3.7	7.8	8.5	670	2030	2830	9.3	8.9	8.5
		20 + 25 + 25	1.94	2.43	2.43	-	3.7	6.8	8.5	670	1610	2830	7.4	7.1	6.8
		20 + 25 + 35	1.88	2.34	3.28	-	3.7	7.5	8.5	670	1870	2830	8.6	8.2	7.9
		20 + 25 + 50	1.64	2.05	4.11	-	3.7	7.8	8.5	670	2030	2830	9.3	8.9	8.5
		20 + 25 + 60	1.49	1.86	4.46	-	3.7	7.8	8.5	670	2030	2830	9.3	8.9	8.5
		20 + 35 + 35	1.73	3.03	3.03	-	3.7	7.8	8.5	670	2030	2830	9.3	8.9	8.5
		20 + 35 + 50	1.49	2.60	3.71	-	3.7	7.8	8.5	670	2030	2830	9.3	8.9	8.5
		20 + 35 + 60	1.36	2.37	4.07	-	3.7	7.8	8.5	670	2030	2830	9.3	8.9	8.5
		20 + 50 + 50	1.30	3.25	3.25	-	3.7	7.8	8.5	670	2030	2830	9.3	8.9	8.5
		20 + 50 + 60	1.20	3.00	3.60	-	3.7	7.8	8.5	670	2030	2830	9.3	8.9	8.5
		25 + 25 + 25	2.37	2.37	2.37	-	3.7	7.1	8.5	670	1730	2830	7.9	7.6	7.3
		25 + 25 + 35	2.29	2.29	3.21	-	3.7	7.8	8.5	670	2030	2830	9.3	8.9	8.5
		25 + 25 + 50	1.95	1.95	3.90	-	3.7	7.8	8.5	670	2030	2830	9.3	8.9	8.5
		25 + 25 + 60	1.77	1.77	4.25	-	3.7	7.8	8.5	670	2030	2830	9.3	8.9	8.5
		25 + 35 + 35	2.05	2.87	2.87	-	3.7	7.8	8.5	670	2030	2830	9.3	8.9	8.5
		25 + 35 + 50	1.77	2.48	3.55	-	3.7	7.8	8.5	670	2030	2830	9.3	8.9	8.5
		25 + 35 + 60	1.63	2.28	3.90	-	3.7	7.8	8.5	670	2030	2830	9.3	8.9	8.5
		25 + 50 + 50	1.56	3.12	3.12	-	3.7	7.8	8.5	670	2030	2830	9.3	8.9	8.5
		25 + 50 + 60	1.44	2.89	3.47	-	3.7	7.8	8.5	670	2030	2830	9.3	8.9	8.5
		35 + 35 + 35	2.60	2.60	2.60	-	3.7	7.8	8.5	670	2030	2830	9.3	8.9	8.5
		35 + 35 + 50	2.28	2.28	3.25	-	3.7	7.8	8.5	670	2030	2830	9.3	8.9	8.5
		35 + 35 + 60	2.10	2.10	3.60	-	3.7	7.8	8.5	670	2030	2830	9.3	8.9	8.5
		35 + 50 + 50	2.02	2.89	2.89	-	3.7	7.8	8.5	670	2030	2830	9.3	8.9	8.5
	4 room	20 + 20 + 20 + 20	1.95	1.95	1.95	1.95	4.4	7.8	9.2	890	1920	2830	8.8	8.4	8.1
		20 + 20 + 20 + 25	1.84	1.84	1.84	2.29	4.4	7.8	9.2	890	1920	2830	8.8	8.4	8.1
		20 + 20 + 20 + 35	1.66	1.66	1.66	2.91	4.4	7.9	9.2	890	1940	2830	8.9	8.5	8.2
		20 + 20 + 20 + 50	1.44	1.44	1.44	3.59	4.4	7.9	9.2	890	1940	2830	8.9	8.5	8.2
		20 + 20 + 20 + 60	1.33	1.33	1.33	4.00	4.4	8.0	9.2	890	1950	2830	9.9	8.6	9.0
		20 + 20 + 25 + 25	1.76	1.76	2.19	2.19	4.4	7.9	9.2	890	1940	2830	8.9	8.5	8.2
		20 + 20 + 25 + 35	1.58	1.58	1.98	2.77	4.4	7.9	9.2	890	1940	2830	8.9	8.5	8.2
		20 + 20 + 25 + 50	1.37	1.37	1.72	3.43	4.4	7.9	9.2	890	1940	2830	8.9	8.5	8.2
		20 + 20 + 25 + 60	1.28	1.28	1.60	3.84	4.4	8.0	9.2	890	1950	2830	9.9	8.6	9.0
		20 + 20 + 35 + 35	1.44	1.44	2.51	2.51	4.4	7.9	9.2	890	1940	2830	8.9	8.5	8.2
		20 + 20 + 35 + 50	1.28	1.28	2.24	3.20	4.4	8.0	9.2	890	1950	2830	9.9	8.6	9.0
		20 + 20 + 35 + 60	1.19	1.19	2.07	3.56	4.4	8.0	9.2	890	1950	2830	9.9	8.6	9.0
		20 + 25 + 25 + 25	1.66	2.08	2.08	2.08	4.4	7.9	9.2	890	1940	2830	8.9	8.5	8.2
		20 + 25 + 25 + 35	1.50	1.88	1.88	2.63	4.4	7.9	9.2	890	1940	2830	8.9	8.5	8.2
		20 + 25 + 25 + 50	1.33	1.67	1.67	3.33	4.4	8.0	9.2	890	1950	2830	9.9	8.6	9.0
		20 + 25 + 25 + 60	1.23	1.54	1.54	3.69	4.4	8.0	9.2	890	1950	2830	9.9	8.6	9.0
		20 + 25 + 35 + 35	1.37	1.72	2.40	2.40	4.4	7.9	9.2	890	1940	2830	8.9	8.5	8.2
		20 + 25 + 35 + 50	1.23	1.54	2.15	3.08	4.4	8.0	9.2	890	1950	2830	9.9	8.6	9.0
		20 + 35 + 35 + 35	1.28	2.24	2.24	2.24	4.4	8.0	9.2	890	1950	2830	9.9	8.6	9.0
		25 + 25 + 25 + 25	1.98	1.98	1.98	1.98	4.4	7.9	9.2	890	1940	2830	8.9	8.5	8.2
		25 + 25 + 25 + 35	1.80	1.80	1.80	2.51	4.4	7.9	9.2	890	1940	2830	8.9	8.5	8.2
		25 + 25 + 25 + 50	1.60	1.60	1.60	3.20	4.4	8.0	9.2	890	1950	2830	9.9	8.6	9.0
		25 + 25 + 25 + 60	1.48	1.48	1.48	3.56	4.4	8.0	9.2	890	1950	2830	9.9	8.6	9.0
		25 + 25 + 35 + 35	1.67	1.67	2.33	2.33	4.4	8.0	9.2	890	1950	2830	9.9	8.6	9.0
		25 + 25 + 35 + 50	1.48	1.48	2.07	2.96	4.4	8.0	9.2	890	1950	2830	9.9	8.6	9.0
		25 + 35 + 35 + 35	1.54	2.15	2.15	2.15	4.4	8.0	9.2	890	1950	2830	9.9	8.6	9.0

SCM80ZM-S1 Table of Indoor unit combination with other indoor unit

Indoor unit combination			Heating capacity (kW)							Power consumption(W)			Standard current(A)		
			Room heating capacity				Total capacity								
			A	B	C	D	Min.	Standard	Max.	Min.	Standard	Max.	220V	230V	240V
Heating operation	1 room	20	3.0	-	-	-	1.5	3.0	3.5	600	1060	1330	4.9	4.7	4.5
		25	3.4	-	-	-	1.5	3.4	4.0	600	1220	1510	5.6	5.4	5.1
		35	4.5	-	-	-	1.5	4.5	4.8	600	1510	1790	6.9	6.6	6.4
		50	5.8	-	-	-	1.5	5.8	6.2	600	1950	2310	9.0	8.6	8.2
		60	6.8	-	-	-	1.5	6.8	7.1	600	2240	2660	10.3	9.8	9.4
	2 room	20 + 20	2.70	2.70	-	-	2.1	5.4	7.0	630	1370	1870	6.3	6.0	5.8
		20 + 25	2.62	3.28	-	-	2.1	5.9	7.3	630	1560	2130	7.2	6.9	6.6
		20 + 35	2.51	4.39	-	-	2.1	6.9	7.9	630	1950	2650	9.0	8.6	8.2
		20 + 50	2.37	5.93	-	-	2.1	8.3	8.4	630	2510	3430	11.5	11.0	10.6
		20 + 60	2.08	6.23	-	-	2.1	8.3	8.4	630	2510	3430	11.5	11.0	10.6
		25 + 25	3.20	3.20	-	-	2.1	6.4	7.7	630	1740	2480	8.0	7.6	7.3
		25 + 35	3.08	4.32	-	-	2.1	7.4	8.2	630	2130	2910	9.8	9.4	9.0
		25 + 50	2.77	5.53	-	-	2.1	8.3	8.4	630	2510	3430	11.5	11.0	10.6
		25 + 60	2.44	5.86	-	-	2.1	8.3	8.4	630	2510	3430	11.5	11.0	10.6
		35 + 35	4.15	4.15	-	-	2.1	8.3	8.4	630	2510	3430	11.5	11.0	10.6
		35 + 50	3.42	4.88	-	-	2.1	8.3	8.4	630	2510	3430	11.5	11.0	10.6
		35 + 60	3.06	5.24	-	-	2.1	8.3	8.4	630	2510	3430	11.5	11.0	10.6
		50 + 50	4.15	4.15	-	-	2.1	8.3	8.4	630	2510	3430	11.5	11.0	10.6
		50 + 60	3.77	4.53	-	-	2.1	8.3	8.4	630	2510	3430	11.5	11.0	10.6
		60 + 60	4.15	4.15	-	-	2.1	8.3	8.4	630	2510	3430	11.5	11.0	10.6
	3 room	20 + 20 + 20	2.57	2.57	2.57	-	3.2	7.7	9.1	660	1870	3430	8.6	8.2	7.9
		20 + 20 + 25	2.46	2.46	3.08	-	3.2	8.0	9.1	660	1970	3430	9.0	8.7	8.3
		20 + 20 + 35	2.27	2.27	3.97	-	3.2	8.5	9.1	660	2130	3430	9.8	9.4	9.0
		20 + 20 + 50	2.00	2.00	5.00	-	3.2	9.0	9.1	660	2300	3430	10.6	10.1	9.7
		20 + 20 + 60	1.80	1.80	5.40	-	3.2	9.0	9.1	660	2300	3430	10.6	10.1	9.7
		20 + 25 + 25	2.34	2.93	2.93	-	3.2	8.2	9.1	660	2030	3430	9.3	8.9	8.5
		20 + 25 + 35	2.20	2.75	3.85	-	3.2	8.8	9.1	660	2220	3430	10.2	9.7	9.3
		20 + 25 + 50	1.89	2.37	4.74	-	3.2	9.0	9.1	660	2300	3430	10.6	10.1	9.7
		20 + 25 + 60	1.71	2.14	5.14	-	3.2	9.0	9.1	660	2300	3430	10.6	10.1	9.7
		20 + 35 + 35	2.00	3.50	3.50	-	3.2	9.0	9.1	660	2300	3430	10.6	10.1	9.7
		20 + 35 + 50	1.71	3.00	4.29	-	3.2	9.0	9.1	660	2300	3430	10.6	10.1	9.7
		20 + 35 + 60	1.57	2.74	4.70	-	3.2	9.0	9.1	660	2300	3430	10.6	10.1	9.7
		20 + 50 + 50	1.50	3.75	3.75	-	3.2	9.0	9.1	660	2300	3430	10.6	10.1	9.7
		20 + 50 + 60	1.38	3.46	4.15	-	3.2	9.0	9.1	660	2300	3430	10.6	10.1	9.7
		25 + 25 + 25	2.83	2.83	2.83	-	3.2	8.5	9.1	660	2130	3430	9.8	9.4	9.0
		25 + 25 + 35	2.65	2.65	3.71	-	3.2	9.0	9.1	660	2300	3430	10.6	10.1	9.7
		25 + 25 + 50	2.25	2.25	4.50	-	3.2	9.0	9.1	660	2300	3430	10.6	10.1	9.7
		25 + 25 + 60	2.05	2.05	4.91	-	3.2	9.0	9.1	660	2300	3430	10.6	10.1	9.7
		25 + 35 + 35	2.37	3.32	3.32	-	3.2	9.0	9.1	660	2300	3430	10.6	10.1	9.7
		25 + 35 + 50	2.05	2.86	4.09	-	3.2	9.0	9.1	660	2300	3430	10.6	10.1	9.7
		25 + 35 + 60	1.88	2.63	4.50	-	3.2	9.0	9.1	660	2300	3430	10.6	10.1	9.7
		25 + 50 + 50	1.80	3.60	3.60	-	3.2	9.0	9.1	660	2300	3430	10.6	10.1	9.7
		25 + 50 + 60	1.67	3.33	4.00	-	3.2	9.0	9.1	660	2300	3430	10.6	10.1	9.7
		35 + 35 + 35	3.00	3.00	3.00	-	3.2	9.0	9.1	660	2300	3430	10.6	10.1	9.7
		35 + 35 + 50	2.63	2.63	3.75	-	3.2	9.0	9.1	660	2300	3430	10.6	10.1	9.7
		35 + 35 + 60	2.42	2.42	4.15	-	3.2	9.0	9.1	660	2300	3430	10.6	10.1	9.7
		35 + 50 + 50	2.33	3.33	3.33	-	3.2	9.0	9.1	660	2300	3430	10.6	10.1	9.7
	4 room	20 + 20 + 20 + 20	2.28	2.28	2.28	2.28	3.6	9.1	9.5	800	2270	3430	10.4	10.0	9.6
		20 + 20 + 20 + 25	2.14	2.14	2.14	2.68	3.6	9.1	9.5	800	2270	3430	10.4	10.0	9.6
		20 + 20 + 20 + 35	1.94	1.94	1.94	3.39	3.6	9.2	9.5	800	2290	3430	10.5	10.1	9.6
		20 + 20 + 20 + 50	1.67	1.67	1.67	4.18	3.6	9.2	9.5	800	2290	3430	10.5	10.1	9.6
		20 + 20 + 20 + 60	1.55	1.55	1.55	4.65	3.6	9.3	9.5	800	2310	3430	10.7	10.2	9.8
		20 + 20 + 25 + 25	2.04	2.04	2.56	2.56	3.6	9.2	9.5	800	2290	3430	10.5	10.1	9.6
		20 + 20 + 25 + 35	1.84	1.84	2.30	3.22	3.6	9.2	9.5	800	2290	3430	10.5	10.1	9.6
		20 + 20 + 25 + 50	1.62	1.62	2.02	4.04	3.6	9.3	9.5	800	2310	3430	10.7	10.2	9.8
		20 + 20 + 25 + 60	1.49	1.49	1.86	4.46	3.6	9.3	9.5	800	2310	3430	10.7	10.2	9.8
		20 + 20 + 35 + 35	1.67	1.67	2.93	2.93	3.6	9.2	9.5	800	2290	3430	10.5	10.1	9.6
		20 + 20 + 35 + 50	1.49	1.49	2.60	3.72	3.6	9.3	9.5	800	2310	3430	10.7	10.2	9.8
		20 + 20 + 35 + 60	1.38	1.38	2.41	4.13	3.6	9.3	9.5	800	2310	3430	10.7	10.2	9.8
		20 + 25 + 25 + 25	1.94	2.42	2.42	2.42	3.6	9.2	9.5	800	2290	3430	10.5	10.1	9.6
		20 + 25 + 25 + 35	1.75	2.19	2.19	3.07	3.6	9.2	9.5	800	2290	3430	10.5	10.1	9.6
		20 + 25 + 25 + 50	1.55	1.94	1.94	3.88	3.6	9.3	9.5	800	2310	3430	10.7	10.2	9.8
		20 + 25 + 25 + 60	1.43	1.79	1.79	4.29	3.6	9.3	9.5	800	2310	3430	10.7	10.2	9.8
		20 + 25 + 35 + 35	1.62	2.02	2.83	2.83	3.6	9.3	9.5	800	2310	3430	10.7	10.2	9.8
		20 + 25 + 35 + 50	1.43	1.79	2.50	3.58	3.6	9.3	9.5	800	2310	3430	10.7	10.2	9.8
		20 + 35 + 35 + 35	1.49	2.60	2.60	2.60	3.6	9.3	9.5	800	2310	3430	10.7	10.2	9.8
		25 + 25 + 25 + 25	2.30	2.30	2.30	2.30	3.6	9.2	9.5	800	2290	3430	10.5	10.1	9.6
		25 + 25 + 25 + 35	2.09	2.09	2.09	2.93	3.6	9.2	9.5	800	2290	3430	10.5	10.1	9.6
		25 + 25 + 25 + 50	1.86	1.86	1.86	3.72	3.6	9.3	9.5	800	2310	3430	10.7	10.2	9.8
		25 + 25 + 25 + 60	1.72	1.72	1.72	4.13	3.6	9.3	9.5	800	2310	3430	10.7	10.2	9.8
		25 + 25 + 35 + 35	1.94	1.94	2.71	2.71	3.6	9.3	9.5	800	2310	3430	10.7	10.2	9.8
		25 + 25 + 35 + 50	1.72	1.72	2.41	3.44	3.6	9.3	9.5	800	2310	3430	10.7	10.2	9.8
		25 + 35 + 35 + 35	1.79	2.50	2.50	2.50	3.6	9.3	9.5	800	2310	3430	10.7	10.2	9.8

Indoor unit combination			Cooling capacity (kW)							Power consumption(W)			Standard current(A)		
			Room cooling capacity				Total capacity								
			A	B	C	D	Min.	Standard	Max.	Min.	Standard	Max.	220V	230V	240V
Cooling operation	1 room	20	2.0	-	-	-	1.8	2.0	2.7	480	530	950	2.4	2.3	2.2
		25	2.5	-	-	-	1.8	2.5	3.2	480	730	1080	3.4	3.2	3.1
		35	3.5	-	-	-	1.8	3.5	3.7	480	1120	1240	5.1	4.9	4.7
		50	5.0	-	-	-	1.8	5.0	5.8	480	1710	2100	7.9	7.5	7.2
		60	6.0	-	-	-	1.8	6.0	6.7	480	2140	2700	9.8	9.4	9.0
	2 room	20 + 20	2.00	2.00	-	-	3.0	4.0	5.8	550	930	1910	4.3	4.1	3.9
		20 + 25	2.00	2.50	-	-	3.0	4.5	6.1	550	1170	2060	5.4	5.1	4.9
		20 + 35	2.00	3.50	-	-	3.0	5.5	6.6	550	1590	2320	7.3	7.0	6.7
		20 + 50	1.97	4.93	-	-	3.0	6.9	7.5	550	2200	2830	10.1	9.7	9.3
		20 + 60	1.85	5.55	-	-	3.0	7.4	7.5	550	2430	2830	11.2	10.7	10.2
		25 + 25	2.50	2.50	-	-	3.0	5.0	6.5	550	1360	2270	6.2	6.0	5.7
		25 + 35	2.46	3.44	-	-	3.0	5.9	6.8	550	1780	2470	8.2	7.8	7.5
		25 + 50	2.47	4.93	-	-	3.0	7.4	7.5	550	2430	2830	11.2	10.7	10.2
		25 + 60	2.18	5.22	-	-	3.0	7.4	7.5	550	2430	2830	11.2	10.7	10.2
		35 + 35	3.45	3.45	-	-	3.0	6.9	7.5	550	2200	2680	10.1	9.7	9.3
		35 + 50	3.05	4.35	-	-	3.0	7.4	7.5	550	2430	2830	11.2	10.7	10.2
		35 + 60	2.73	4.67	-	-	3.0	7.4	7.5	550	2430	2830	11.2	10.7	10.2
		50 + 50	3.70	3.70	-	-	3.0	7.4	7.5	550	2430	2830	11.2	10.7	10.2
		50 + 60	3.36	4.04	-	-	3.0	7.4	7.5	550	2430	2830	11.2	10.7	10.2
		60 + 60	3.70	3.70	-	-	3.0	7.4	7.5	550	2430	2830	11.2	10.7	10.2
	3 room	20 + 20 + 20	2.00	2.00	2.00	-	3.7	6.0	8.1	670	1450	2830	6.7	6.4	6.1
		20 + 20 + 25	2.00	2.00	2.50	-	3.7	6.5	8.1	670	1630	2830	7.5	7.2	6.9
		20 + 20 + 35	1.89	1.89	3.31	-	3.7	7.1	8.1	670	1950	2830	9.0	8.6	8.2
		20 + 20 + 50	1.73	1.73	4.33	-	3.7	7.8	8.1	670	2320	2830	10.7	10.2	9.8
		20 + 20 + 60	1.56	1.56	4.68	-	3.7	7.8	8.1	670	2320	2830	10.7	10.2	9.8
		20 + 25 + 25	1.94	2.43	2.43	-	3.7	6.8	8.1	670	1820	2830	8.4	8.0	7.7
		20 + 25 + 35	1.88	2.34	3.28	-	3.7	7.5	8.1	670	2130	2830	9.8	9.4	9.0
		20 + 25 + 50	1.64	2.05	4.11	-	3.7	7.8	8.1	670	2320	2830	10.7	10.2	9.8
		20 + 25 + 60	1.49	1.86	4.46	-	3.7	7.8	8.1	670	2320	2830	10.7	10.2	9.8
		20 + 35 + 35	1.73	3.03	3.03	-	3.7	7.8	8.1	670	2320	2830	10.7	10.2	9.8
		20 + 35 + 50	1.49	2.60	3.71	-	3.7	7.8	8.1	670	2320	2830	10.7	10.2	9.8
		20 + 35 + 60	1.36	2.37	4.07	-	3.7	7.8	8.1	670	2320	2830	10.7	10.2	9.8
		20 + 50 + 50	1.30	3.25	3.25	-	3.7	7.8	8.1	670	2320	2830	10.7	10.2	9.8
		20 + 50 + 60	1.20	3.00	3.60	-	3.7	7.8	8.1	670	2320	2830	10.7	10.2	9.8
		25 + 25 + 25	2.37	2.37	2.37	-	3.7	7.1	8.1	670	1950	2830	9.0	8.6	8.2
		25 + 25 + 35	2.29	2.29	3.21	-	3.7	7.8	8.1	670	2320	2830	10.7	10.2	9.8
		25 + 25 + 50	1.95	1.95	3.90	-	3.7	7.8	8.1	670	2320	2830	10.7	10.2	9.8
		25 + 25 + 60	1.77	1.77	4.25	-	3.7	7.8	8.1	670	2320	2830	10.7	10.2	9.8
		25 + 35 + 35	2.05	2.87	2.87	-	3.7	7.8	8.1	670	2320	2830	10.7	10.2	9.8
		25 + 35 + 50	1.77	2.48	3.55	-	3.7	7.8	8.1	670	2320	2830	10.7	10.2	9.8
		25 + 35 + 60	1.63	2.28	3.90	-	3.7	7.8	8.1	670	2320	2830	10.7	10.2	9.8
		25 + 50 + 50	1.56	3.12	3.12	-	3.7	7.8	8.1	670	2320	2830	10.7	10.2	9.8
		25 + 50 + 60	1.44	2.89	3.47	-	3.7	7.8	8.1	670	2320	2830	10.7	10.2	9.8
		35 + 35 + 35	2.60	2.60	2.60	-	3.7	7.8	8.1	670	2320	2830	10.7	10.2	9.8
		35 + 35 + 50	2.28	2.28	3.25	-	3.7	7.8	8.1	670	2320	2830	10.7	10.2	9.8
		35 + 35 + 60	2.10	2.10	3.60	-	3.7	7.8	8.1	670	2320	2830	10.7	10.2	9.8
		35 + 50 + 50	2.02	2.89	2.89	-	3.7	7.8	8.1	670	2320	2830	10.7	10.2	9.8
	4 room	20 + 20 + 20 + 20	1.95	1.95	1.95	1.95	4.4	7.8	8.7	890	2180	2830	9.9	9.5	9.1
		20 + 20 + 20 + 25	1.84	1.84	1.84	2.29	4.4	7.8	8.7	890	2180	2830	9.9	9.5	9.1
		20 + 20 + 20 + 35	1.66	1.66	1.66	2.91	4.4	7.9	8.7	890	2200	2830	10.0	9.6	9.2
		20 + 20 + 20 + 50	1.44	1.44	1.44	3.59	4.4	7.9	8.7	890	2200	2830	10.0	9.6	9.2
		20 + 20 + 20 + 60	1.33	1.33	1.33	4.00	4.4	8.0	8.7	890	2220	2830	10.1	9.7	9.3
		20 + 20 + 25 + 25	1.76	1.76	2.19	2.19	4.4	7.9	8.7	890	2200	2830	10.0	9.6	9.2
		20 + 20 + 25 + 35	1.58	1.58	1.98	2.77	4.4	7.9	8.7	890	2200	2830	10.0	9.6	9.2
		20 + 20 + 25 + 50	1.37	1.37	1.72	3.43	4.4	7.9	8.7	890	2200	2830	10.0	9.6	9.2
		20 + 20 + 25 + 60	1.28	1.28	1.60	3.84	4.4	8.0	8.7	890	2220	2830	10.1	9.7	9.3
		20 + 20 + 35 + 35	1.44	1.44	2.51	2.51	4.4	7.9	8.7	890	2200	2830	10.0	9.6	9.2
		20 + 20 + 35 + 50	1.28	1.28	2.24	3.20	4.4	8.0	8.7	890	2220	2830	10.1	9.7	9.3
		20 + 20 + 35 + 60	1.19	1.19	2.07	3.56	4.4	8.0	8.7	890	2220	2830	10.1	9.7	9.3
		20 + 25 + 25 + 25	1.66	2.08	2.08	2.08	4.4	7.9	8.7	890	2200	2830	10.0	9.6	9.2
		20 + 25 + 25 + 35	1.50	1.88	1.88	2.63	4.4	7.9	8.7	890	2200	2830	10.0	9.6	9.2
		20 + 25 + 25 + 50	1.33	1.67	1.67	3.33	4.4	8.0	8.7	890	2220	2830	10.1	9.7	9.3
		20 + 25 + 25 + 60	1.23	1.54	1.54	3.69	4.4	8.0	8.7	890	2220	2830	10.1	9.7	9.3
		20 + 25 + 35 + 35	1.37	1.72	2.40	2.40	4.4	7.9	8.7	890	2200	2830	10.0	9.6	9.2
		20 + 25 + 35 + 50	1.23	1.54	2.15	3.08	4.4	8.0	8.7	890	2220	2830	10.1	9.7	9.3
		20 + 35 + 35 + 35	1.28	2.24	2.24	2.24	4.4	8.0	8.7	890	2220	2830	10.1	9.7	9.3
		25 + 25 + 25 + 25	1.98	1.98	1.98	1.98	4.4	7.9	8.7	890	2200	2830	10.0	9.6	9.2
		25 + 25 + 25 + 35	1.80	1.80	1.80	2.51	4.4	7.9	8.7	890	2200	2830	10.0	9.6	9.2
		25 + 25 + 25 + 50	1.60	1.60	1.60	3.20	4.4	8.0	8.7	890	2220	2830	10.1	9.7	9.3
		25 + 25 + 25 + 60	1.48	1.48	1.48	3.56	4.4	8.0	8.7	890	2220	2830	10.1	9.7	9.3
		25 + 25 + 35 + 35	1.67	1.67	2.33	2.33	4.4	8.0	8.7	890	2220	2830	10.1	9.7	9.3
		25 + 25 + 35 + 50	1.48	1.48	2.07	2.96	4.4	8.0	8.7	890	2220	2830	10.1	9.7	9.3
		25 + 35 + 35 + 35	1.54	2.15	2.15	2.15	4.4	8.0	8.7	890	2220	2830	10.1	9.7	9.3

MULTI-SPLIT SYSTEM

SCM100ZM-S Table of Indoor unit combination with all indoor unit SRK-ZSX type only

Indoor unit combination			Heating capacity (kW)									Power consumption(W)			Standard current(A)		
			Room heating capacity						Total capacity								
			A	B	C	D	E	F	Min.	Standard	Max.	Min.	Standard	Max.	220V	230V	240V
Heating operation	1 room	20	3.0	-	-	-			1.5	3.0	3.7	700	1010	1330	4.6	4.4	4.3
		25	3.4	-	-	-			1.5	3.4	4.2	700	1150	1540	5.3	5.1	4.8
		35	4.5	-	-	-			1.5	4.5	5.0	700	1540	1840	7.1	6.8	6.5
		50	5.8	-	-	-			1.5	5.8	6.5	700	2000	2410	9.2	8.8	8.4
		60	6.8	-	-	-			1.5	6.8	7.5	700	2360	2760	10.8	10.4	9.9
	2 room	20+20	3.00	3.00	-	-	-	-	2.1	6.0	7.4	750	1510	1460	6.9	6.6	6.4
		20+25	2.84	3.56	-	-	-	-	2.1	6.4	7.9	750	1630	2210	7.5	7.2	6.9
		20+35	2.73	4.77	-	-	-	-	2.1	7.5	8.7	750	1950	2520	9.0	8.6	8.2
		20+50	2.51	6.29	-	-	-	-	2.1	8.8	10.2	750	2380	3220	10.9	10.5	10.0
		20+60	2.45	7.35	-	-	-	-	2.1	9.8	11.2	750	2780	3620	12.8	12.2	11.7
		25+25	3.40	3.40	-	-	-	-	2.1	6.8	8.4	750	1740	2420	8.0	7.6	7.3
		25+35	3.29	4.61	-	-	-	-	2.1	7.9	9.2	750	2100	2820	9.6	9.2	8.8
		25+50	3.07	6.13	-	-	-	-	2.1	9.2	10.7	750	2580	3610	11.8	11.3	10.9
		25+60	3.00	7.20	-	-	-	-	2.1	10.2	11.7	750	2980	3790	13.7	13.1	12.5
		35+35	4.50	4.50	-	-	-	-	2.1	9.0	10.0	750	2470	3210	11.3	10.8	10.4
		35+50	4.24	6.06	-	-	-	-	2.1	10.3	11.5	750	2980	3710	13.7	13.1	12.5
		35+60	4.16	7.14	-	-	-	-	2.1	11.3	12.5	750	3430	4100	15.7	15.1	14.4
		50+50	5.80	5.80	-	-	-	-	2.1	11.6	13.0	750	3580	4320	16.4	15.7	15.1
		50+60	5.45	6.55	-	-	-	-	2.1	12.0	13.5	750	3720	4520	17.1	16.3	15.7
		60+60	6.00	6.00	-	-	-	-	2.1	12.0	13.5	750	3720	4520	17.1	16.3	15.7
	3 room	20+20+20	3.00	3.00	3.00	-	-	-	3.2	9.0	11.1	780	2230	3350	10.2	9.8	9.4
		20+20+25	2.89	2.89	3.62	-	-	-	3.2	9.4	11.6	780	2350	3550	10.8	10.3	9.9
		20+20+35	2.80	2.80	4.90	-	-	-	3.2	10.5	12.4	780	2710	3820	12.4	11.9	11.4
		20+20+50	2.62	2.62	6.56	-	-	-	3.2	11.8	13.5	780	3210	4190	14.7	14.1	13.5
		20+20+60	2.40	2.40	7.20	-	-	-	3.2	12.0	13.5	780	3350	4190	15.4	14.7	14.1
		20+25+25	2.80	3.50	3.50	-	-	-	3.2	9.8	12.1	780	2510	3720	11.5	11.0	10.6
		20+25+35	2.73	3.41	4.77	-	-	-	3.2	10.9	12.9	780	2910	3990	13.4	12.8	12.2
		20+25+50	2.53	3.16	6.32	-	-	-	3.2	12.0	13.5	780	3350	4190	15.4	14.7	14.1
		20+25+60	2.29	2.86	6.86	-	-	-	3.2	12.0	13.5	780	3350	4190	15.4	14.7	14.1
		20+35+35	2.67	4.67	4.67	-	-	-	3.2	12.0	13.5	780	3360	4190	15.4	14.8	14.1
		20+35+50	2.29	4.00	5.71	-	-	-	3.2	12.0	13.5	780	3350	4190	15.4	14.7	14.1
		20+35+60	2.09	3.65	6.26	-	-	-	3.2	12.0	13.5	780	3340	4190	15.3	14.7	14.1
		20+50+50	2.00	5.00	5.00	-	-	-	3.2	12.0	13.5	780	3340	4190	15.3	14.7	14.1
		20+50+60	1.85	4.62	5.54	-	-	-	3.2	12.0	13.5	780	3340	4190	15.3	14.7	14.1
		20+60+60	1.71	5.14	5.14	-	-	-	3.2	12.0	13.5	780	3330	4190	15.3	14.6	14.0
		25+25+25	3.40	3.40	3.40	-	-	-	3.2	10.2	12.6	780	2710	3880	12.4	11.9	11.4
		25+25+35	3.32	3.32	4.65	-	-	-	3.2	11.3	13.4	780	3110	4120	14.3	13.7	13.1
		25+25+50	3.00	3.00	6.00	-	-	-	3.2	12.0	13.5	780	3350	4190	15.4	14.7	14.1
		25+25+60	2.73	2.73	6.55	-	-	-	3.2	12.0	13.5	780	3350	4190	15.4	14.7	14.1
		25+35+35	3.16	4.42	4.42	-	-	-	3.2	12.0	13.5	780	3350	4190	15.4	14.7	14.1
		25+35+50	2.73	3.82	5.45	-	-	-	3.2	12.0	13.5	780	3350	4190	15.4	14.7	14.1
		25+35+60	2.50	3.50	6.00	-	-	-	3.2	12.0	13.5	780	3340	4190	15.3	14.7	14.1
		25+50+50	2.40	4.80	4.80	-	-	-	3.2	12.0	13.5	780	3340	4190	15.3	14.7	14.1
		25+50+60	2.22	4.44	5.33	-	-	-	3.2	12.0	13.5	780	3330	4190	15.3	14.6	14.0
		25+60+60	2.07	4.97	4.97	-	-	-	3.2	12.0	13.5	780	3330	4190	15.3	14.6	14.0
		35+35+35	4.00	4.00	4.00	-	-	-	3.2	12.0	13.5	780	3350	4190	15.4	14.7	14.1
		35+35+50	3.50	3.50	5.00	-	-	-	3.2	12.0	13.5	780	3340	4190	15.3	14.7	14.1
		35+35+60	3.23	3.23	5.54	-	-	-	3.2	12.0	13.5	780	3340	4190	15.3	14.7	14.1
		35+50+50	3.11	4.44	4.44	-	-	-	3.2	12.0	13.5	780	3330	4190	15.3	14.6	14.0
		35+50+60	2.90	4.14	4.97	-	-	-	3.2	12.0	13.5	780	3330	4190	15.3	14.6	14.0
		35+60+60	2.71	4.65	4.65	-	-	-	3.2	12.0	13.5	780	3320	4190	15.2	14.6	14.0
		50+50+50	4.00	4.00	4.00	-	-	-	3.2	12.0	13.5	780	3330	4190	15.3	14.6	14.0
		50+50+60	3.75	3.75	4.50	-	-	-	3.2	12.0	13.5	780	3320	4190	15.2	14.6	14.0
	4 room	20+20+20+20	3.00	3.00	3.00	3.00	-	-	3.6	12.0	13.5	950	3230	3840	14.7	14.1	13.5
		20+20+20+25	2.82	2.82	2.82	3.53	-	-	3.6	12.0	13.5	950	3230	3840	14.7	14.1	13.5
		20+20+20+35	2.53	2.53	2.53	4.42	-	-	3.6	12.0	13.5	950	3230	3840	14.7	14.1	13.5
		20+20+20+50	2.18	2.18	2.18	5.45	-	-	3.6	12.0	13.5	950	3220	3840	14.7	14.0	13.4
		20+20+20+60	2.00	2.00	2.00	6.00	-	-	3.6	12.0	13.5	950	3220	3840	14.7	14.0	13.4
		20+20+25+25	2.67	2.67	3.33	3.33	-	-	3.6	12.0	13.5	950	3230	3840	14.7	14.1	13.5
		20+20+25+35	2.40	2.40	3.00	4.20	-	-	3.6	12.0	13.5	950	3220	3840	14.7	14.0	13.4
		20+20+25+50	2.09	2.09	2.61	5.22	-	-	3.6	12.0	13.5	950	3220	3840	14.7	14.0	13.4
		20+20+25+60	1.92	1.92	2.40	5.76	-	-	3.6	12.0	13.5	950	3340	3840	15.2	14.5	13.9
		20+20+35+35	2.18	2.18	3.82	3.82	-	-	3.6	12.0	13.5	950	3220	3840	14.7	14.0	13.4
		20+20+35+50	1.92	1.92	3.36	4.80	-	-	3.6	12.0	13.5	950	3340	3840	15.2	14.5	13.9
		20+20+35+60	1.78	1.78	3.11	5.33	-	-	3.6	12.0	13.5	950	3210	3840	14.6	14.0	13.4
		20+20+50+50	1.71	1.71	4.29	4.29	-	-	3.6	12.0	13.5	950	3210	3840	14.6	14.0	13.4
		20+20+50+60	1.60	1.60	4.00	4.80	-	-	3.6	12.0	13.5	950	3210	3840	14.6	14.0	13.4
		20+20+60+60	1.50	1.50	4.50	4.50	-	-	3.6	12.0	13.5	950	3200	3840	14.6	13.9	13.3
		20+25+25+25	2.53	3.16	3.16	3.16	-	-	3.6	12.0	13.5	950	3230	3840	14.7	14.1	13.5
		20+25+25+35	2.29	2.86	2.86	4.00	-	-	3.6	12.0	13.5	950	3220	3840	14.7	14.0	13.4
		20+25+25+50	2.00	2.50	2.50	5.00	-	-	3.6	12.0	13.5	950	3220	3840	14.7	14.0	13.4
		20+25+25+60	1.85	2.31	2.31	5.54	-	-	3.6	12.0	13.5	950	3340	3840	15.2	14.5	13.9
		20+25+35+35	2.09	2.61	3.65	3.65	-	-	3.6	12.0	13.5	950	3220	3840	14.7	14.0	13.4
		20+25+35+50	1.85	2.31	3.23	4.62	-	-	3.6	12.0	13.5	950	3340	3840	15.2	14.5	13.9
		20+25+35+60	1.71	2.14	3.00	5.14	-	-	3.6	12.0	13.5	950	3210	3840	14.6	14.0	13.4

Indoor unit combination			Heating capacity (kW)									Power consumption(W)			Standard current(A)		
			Room heating capacity						Total capacity			Min.	Standard	Max.	220V	230V	240V
			A	B	C	D	E	F	Min.	Standard	Max.						
Heating operation	4 room	20+25+50+50	1.66	2.07	4.14	4.14	-	-	3.6	12.0	13.5	950	3210	3840	14.6	14.0	13.4
		20+25+50+60	1.55	1.94	3.87	4.65	-	-	3.6	12.0	13.5	950	3200	3840	14.6	13.9	13.3
		20+35+35+35	1.92	3.36	3.36	3.36	-	-	3.6	12.0	13.5	950	3340	3840	15.2	14.5	13.9
		20+35+35+50	1.71	3.00	3.00	4.29	-	-	3.6	12.0	13.5	950	3210	3840	14.6	14.0	13.4
		20+35+35+60	1.60	2.80	2.80	4.80	-	-	3.6	12.0	13.5	950	3210	3840	14.6	14.0	13.4
		20+35+50+50	1.55	2.71	3.87	3.87	-	-	3.6	12.0	13.5	950	3200	3840	14.6	13.9	13.3
		25+25+25+25	3.00	3.00	3.00	3.00	-	-	3.6	12.0	13.5	950	3220	3840	14.7	14.0	13.4
		25+25+25+35	2.73	2.73	2.73	3.82	-	-	3.6	12.0	13.5	950	3220	3840	14.7	14.0	13.4
		25+25+25+50	2.40	2.40	2.40	4.80	-	-	3.6	12.0	13.5	950	3340	3840	15.2	14.5	13.9
		25+25+25+60	2.22	2.22	2.22	5.33	-	-	3.6	12.0	13.5	950	3210	3840	14.6	14.0	13.4
		25+25+35+35	2.50	2.50	3.50	3.50	-	-	3.6	12.0	13.5	950	3220	3840	14.7	14.0	13.4
		25+25+35+50	2.22	2.22	3.11	4.44	-	-	3.6	12.0	13.5	950	3210	3840	14.6	14.0	13.4
		25+25+35+60	2.07	2.07	2.90	4.97			3.6	12.0	13.5	950	3210	3840	14.6	14.0	13.4
		25+25+50+50	2.00	2.00	4.00	4.00	-	-	3.6	12.0	13.5	950	3210	3840	14.6	14.0	13.4
		25+25+50+60	1.88	1.88	3.75	4.50	-	-	3.6	12.0	13.5	950	3200	3840	14.6	13.9	13.3
		25+35+35+35	2.31	3.23	3.23	3.23	-	-	3.6	12.0	13.5	950	3340	3840	15.2	14.5	13.9
		25+35+35+50	2.07	2.90	2.90	4.14	-	-	3.6	12.0	13.5	950	3210	3840	14.6	14.0	13.4
		25+35+35+60	1.94	2.71	2.71	4.65	-	-	3.6	12.0	13.5	950	3200	3840	14.6	13.9	13.3
		25+35+50+50	1.88	2.63	3.75	3.75	-	-	3.6	12.0	13.5	950	3200	3840	14.6	13.9	13.3
		35+35+35+35	3.00	3.00	3.00	3.00	-	-	3.6	12.0	13.5	950	3210	3840	14.6	14.0	13.4
		35+35+35+50	2.71	2.71	2.71	3.87	-	-	3.6	12.0	13.5	950	3200	3840	14.6	13.9	13.3
	5 room	20+20+20+20+20	2.40	2.40	2.40	2.40	2.40	-	4.0	12.0	13.5	1050	2930	3400	13.3	12.8	12.2
		20+20+20+20+25	2.29	2.29	2.29	2.29	2.86	-	4.0	12.0	13.5	1050	2920	3400	13.3	12.7	12.2
		20+20+20+20+35	2.09	2.09	2.09	2.09	3.65	-	4.0	12.0	13.5	1050	2920	3400	13.3	12.7	12.2
		20+20+20+20+50	1.85	1.85	1.85	1.85	4.62	-	4.0	12.0	13.5	1050	2910	3400	13.2	12.7	12.1
		20+20+20+20+60	1.71	1.71	1.71	1.71	5.14	-	4.0	12.0	13.5	1050	2910	3400	13.2	12.7	12.1
		20+20+20+25+25	2.18	2.18	2.18	2.73	2.73	-	4.0	12.0	13.5	1050	2920	3400	13.3	12.7	12.2
		20+20+20+25+35	2.00	2.00	2.00	2.50	3.50	-	4.0	12.0	13.5	1050	2920	3400	13.3	12.7	12.2
		20+20+20+25+50	1.78	1.78	1.78	2.22	4.44	-	4.0	12.0	13.5	1050	2910	3400	13.2	12.7	12.1
		20+20+20+25+60	1.66	1.66	1.66	2.07	4.97	-	4.0	12.0	13.5	1050	2910	3400	13.2	12.7	12.1
		20+20+20+35+35	1.85	1.85	1.85	3.23	3.23	-	4.0	12.0	13.5	1050	2910	3400	13.2	12.7	12.1
		20+20+20+35+50	1.66	1.66	1.66	2.90	4.14	-	4.0	12.0	13.5	1050	2910	3400	13.2	12.7	12.1
		20+20+20+35+60	1.55	1.55	1.55	2.71	4.65	-	4.0	12.0	13.5	1050	2900	3400	13.2	12.6	12.1
		20+20+20+50+50	1.50	1.50	1.50	3.75	3.75	-	4.0	12.0	13.5	1050	2900	3400	13.2	12.6	12.1
		20+20+25+25+25	2.09	2.09	2.61	2.61	2.61	-	4.0	12.0	13.5	1050	2920	3400	13.3	12.7	12.2
		20+20+25+25+35	1.92	1.92	2.40	2.40	3.36	-	4.0	12.0	13.5	1050	2910	3400	13.2	12.7	12.1
		20+20+25+25+50	1.71	1.71	2.14	2.14	4.29	-	4.0	12.0	13.5	1050	2910	3400	13.2	12.7	12.1
		20+20+25+25+60	1.60	1.60	2.00	2.00	4.80	-	4.0	12.0	13.5	1050	2910	3400	13.2	12.7	12.1
		20+20+25+35+35	1.78	1.78	2.22	3.11	3.11	-	4.0	12.0	13.5	1050	2910	3400	13.2	12.7	12.1
		20+20+25+35+50	1.60	1.60	2.00	2.80	4.00	-	4.0	12.0	13.5	1050	2910	3400	13.2	12.7	12.1
		20+20+25+35+60	1.50	1.50	1.88	2.63	4.50	-	4.0	12.0	13.5	1050	2900	3400	13.2	12.6	12.1
		20+20+35+35+35	1.66	1.66	2.90	2.90	2.90	-	4.0	12.0	13.5	1050	2910	3400	13.2	12.7	12.1
		20+20+35+35+50	1.50	1.50	2.63	2.63	3.75	-	4.0	12.0	13.5	1050	2900	3400	13.2	12.6	12.1
		20+25+25+25+25	2.00	2.50	2.50	2.50	2.50	-	4.0	12.0	13.5	1050	2920	3400	13.3	12.7	12.2
		20+25+25+25+35	1.85	2.31	2.31	2.31	3.23	-	4.0	12.0	13.5	1050	2910	3400	13.2	12.7	12.1
		20+25+25+25+50	1.66	2.07	2.07	2.07	4.14	-	4.0	12.0	13.5	1050	2910	3400	13.2	12.7	12.1
		20+25+25+25+60	1.55	1.94	1.94	1.94	4.65	-	4.0	12.0	13.5	1050	2900	3400	13.2	12.6	12.1
		20+25+25+35+35	1.71	2.14	2.14	3.00	3.00	-	4.0	12.0	13.5	1050	2910	3400	13.2	12.7	12.1
		20+25+25+35+50	1.55	1.94	1.94	2.71	3.87	-	4.0	12.0	13.5	1050	2900	3400	13.2	12.6	12.1
		20+25+35+35+35	1.60	2.00	2.80	2.80	2.80	-	4.0	12.0	13.5	1050	2910	3400	13.2	12.7	12.1
		20+35+35+35+35	1.50	2.63	2.63	2.63	2.63	-	4.0	12.0	13.5	1050	2900	3400	13.2	12.6	12.1
		25+25+25+25+25	2.40	2.40	2.40	2.40	2.40	-	4.0	12.0	13.5	1050	2910	3400	13.2	12.7	12.1
		25+25+25+25+35	2.22	2.22	2.22	2.22	3.11	-	4.0	12.0	13.5	1050	2910	3400	13.2	12.7	12.1
		25+25+25+25+50	2.00	2.00	2.00	2.00	4.00	-	4.0	12.0	13.5	1050	2910	3400	13.2	12.7	12.1
		25+25+25+25+60	1.88	1.88	1.88	1.88	4.50	-	4.0	12.0	13.5	1050	2900	3400	13.2	12.6	12.1
		25+25+25+35+35	2.07	2.07	2.07	2.90	2.90	-	4.0	12.0	13.5	1050	2910	3400	13.2	12.7	12.1
		25+25+25+35+50	1.88	1.88	1.88	2.63	3.75	-	4.0	12.0	13.5	1050	2900	3400	13.2	12.6	12.1
		25+25+35+35+35	1.94	1.94	2.71	2.71	2.71	-	4.0	12.0	13.5	1050	2900	3400	13.2	12.6	12.1

Indoor unit combination			Cooling capacity (kW)									Power consumption(W)			Standard current(A)		
			Room cooling capacity						Total capacity			Min.	Standard	Max.	220V	230V	240V
			A	B	C	D	E	F	Min.	Standard	Max.						
Cooling operation	1 room	20	2.0	-	-	-	-	-	1.8	2.0	2.8	650	750	1100	3.4	3.3	3.2
		25	2.5	-	-	-	-	-	1.8	2.5	3.4	650	950	1350	4.4	4.2	4.0
		35	3.5	-	-	-	-	-	1.8	3.5	3.9	650	1400	1600	6.4	6.1	5.9
		50	5.0	-	-	-	-	-	1.8	5.0	6.1	650	2000	2500	9.2	8.8	8.4
		60	6.0	-	-	-	-	-	1.8	6.0	7.0	650	2450	3000	11.2	10.8	10.3
	2 room	20+20	2.00	2.00	-	-	-	-	3.0	4.0	5.6	740	910	1460	4.2	4.0	3.8
		20+25	2.00	2.50	-	-	-	-	3.0	4.5	6.2	740	1050	1820	4.8	4.6	4.4
		20+35	2.00	3.50	-	-	-	-	3.0	5.5	6.7	740	1430	2020	6.6	6.3	6.0
		20+50	2.00	5.00	-	-	-	-	3.0	7.0	8.9	740	2180	2820	10.0	9.6	9.2
		20+60	2.00	6.00	-	-	-	-	3.0	8.0	9.8	740	2530	3360	11.6	11.1	10.6
		25+25	2.50	2.50	-	-	-	-	3.0	5.0	6.8	740	1350	2200	6.2	5.9	5.7
		25+35	2.50	3.50	-	-	-	-	3.0	6.0	7.3	740	1720	2320	7.9	7.6	7.2
		25+50	2.50	5.00	-	-	-	-	3.0	7.5	9.5	740	2350	3220	10.8	10.3	9.9
		25+60	2.50	6.00	-	-	-	-	3.0	8.5	9.8	740	2680	3360	12.3	11.8	11.3
		35+35	3.50	3.50	-	-	-	-	3.0	7.0	7.8	740	2180	2820	10.0	9.6	9.2
		35+50	3.50	5.00	-	-	-	-	3.0	8.5	10.0	740	2680	3620	12.3	11.8	11.3

MULTI-SPLIT SYSTEM

Indoor unit combination			Cooling capacity (kW)									Power consumption(W)			Standard current(A)		
			Room cooling capacity						Total capacity			Min.	Standard	Max.	220V	230V	240V
			A	B	C	D	E	F	Min.	Standard	Max.						
Cooling operation	2 room	35+60	3.50	6.00	-	-	-	-	3.0	9.5	10.9	740	3120	3990	14.3	13.7	13.1
		50+50	5.00	5.00	-	-	-	-	3.0	10.0	12.0	740	3350	4400	15.4	14.7	14.1
		50+60	4.55	5.45	-	-	-	-	3.0	10.0	12.0	740	3350	4400	15.4	14.7	14.1
		60+60	5.00	5.00	-	-	-	-	3.0	10.0	12.0	740	3340	4400	15.3	14.7	14.1
	3 room	20+20+20	2.00	2.00	2.00	-	-	-	3.7	6.0	8.4	880	1460	2560	6.7	6.4	6.1
		20+20+25	2.00	2.00	2.50	-	-	-	3.7	6.5	9.0	880	1650	2700	7.6	7.2	6.9
		20+20+35	2.00	2.00	3.50	-	-	-	3.7	7.5	9.5	880	1980	3120	9.1	8.7	8.3
		20+20+50	2.00	2.00	5.00	-	-	-	3.7	9.0	11.7	880	2600	4120	11.9	11.4	10.9
		20+20+60	2.00	2.00	6.00	-	-	-	3.7	10.0	12.0	880	3120	4250	14.3	13.7	13.1
		20+25+25	2.00	2.50	2.50	-	-	-	3.7	7.0	9.6	880	1850	3210	8.5	8.1	7.8
		20+25+35	2.00	2.50	3.50	-	-	-	3.7	8.0	10.1	880	2320	3630	10.7	10.2	9.8
		20+25+50	2.00	2.50	5.00	-	-	-	3.7	9.5	12.0	880	2980	4250	13.7	13.1	12.5
		20+25+60	1.90	2.38	5.71	-	-	-	3.7	10.0	12.0	880	3120	4250	14.3	13.7	13.1
		20+35+35	2.00	3.50	3.50	-	-	-	3.7	9.0	10.6	880	2780	3750	12.8	12.2	11.7
		20+35+50	1.90	3.33	4.76	-	-	-	3.7	10.0	12.0	880	3120	4250	14.3	13.7	13.1
		20+35+60	1.74	3.04	5.22	-	-	-	3.7	10.0	12.0	880	3110	4250	14.3	13.7	13.1
		20+50+50	1.67	4.17	4.17	-	-	-	3.7	10.0	12.0	880	3110	4250	14.3	13.7	13.1
		20+50+60	1.54	3.85	4.62	-	-	-	3.7	10.0	12.0	880	3110	4250	14.3	13.7	13.1
		20+60+60	1.43	4.29	4.29	-	-	-	3.7	10.0	12.0	880	3100	4250	14.2	13.6	13.0
		25+25+25	2.50	2.50	2.50	-	-	-	3.7	7.5	10.2	880	2030	3640	9.3	8.9	8.5
		25+25+35	2.50	2.50	3.50	-	-	-	3.7	8.5	10.7	880	2520	3900	11.6	11.1	10.6
		25+25+50	2.50	2.50	5.00	-	-	-	3.7	10.0	12.0	880	3120	4250	14.3	13.7	13.1
		25+25+60	2.27	2.27	5.45	-	-	-	3.7	10.0	12.0	880	3120	4250	14.3	13.7	13.1
		25+35+35	2.50	3.50	3.50	-	-	-	3.7	9.5	11.2	880	2980	3990	13.7	13.1	12.5
		25+35+50	2.27	3.18	4.55	-	-	-	3.7	10.0	12.0	880	3120	4250	14.3	13.7	13.1
		25+35+60	2.08	2.92	5.00	-	-	-	3.7	10.0	12.0	880	3110	4250	14.3	13.7	13.1
		25+50+50	2.00	4.00	4.00	-	-	-	3.7	10.0	12.0	880	3110	4250	14.3	13.7	13.1
		25+50+60	1.85	3.70	4.44	-	-	-	3.7	10.0	12.0	880	3100	4250	14.2	13.6	13.0
		25+60+60	1.72	4.14	4.14	-	-	-	3.7	10.0	12.0	880	3100	4250	14.2	13.6	13.0
		35+35+35	3.33	3.33	3.33	-	-	-	3.7	10.0	11.7	880	3120	4180	14.3	13.7	13.1
		35+35+50	2.92	2.92	4.17	-	-	-	3.7	10.0	12.0	880	3110	4250	14.3	13.7	13.1
		35+35+60	2.69	2.69	4.62	-	-	-	3.7	10.0	12.0	880	3110	4250	14.3	13.7	13.1
		35+50+50	2.59	3.70	3.70	-	-	-	3.7	10.0	12.0	880	3100	4250	14.2	13.6	13.0
		35+50+60	2.41	3.45	4.14				3.7	10.0	12.0	880	3100	4250	14.2	13.6	13.0
		35+60+60	2.26	3.87	3.87				3.7	10.0	12.0	880	3090	4250	14.2	13.6	13.0
		50+50+50	3.33	3.33	3.33	-	-	-	3.7	10.0	12.0	880	3100	4250	14.2	13.6	13.0
		50+50+60	3.13	3.13	3.75	-	-	-	3.7	10.0	12.0	880	3090	4250	14.2	13.6	13.0
	4 room	20+20+20+20	2.00	2.00	2.00	2.00	-	-	4.4	8.0	11.2	1100	2050	3680	9.3	8.9	8.6
		20+20+20+25	2.00	2.00	2.00	2.50	-	-	4.4	8.5	11.8	1100	2320	3890	10.6	10.1	9.7
		20+20+20+35	2.00	2.00	2.00	3.50	-	-	4.4	9.5	12.0	1100	2820	4050	12.8	12.3	11.8
		20+20+20+50	1.82	1.82	1.82	4.55	-	-	4.4	10.0	12.0	1100	3020	4050	13.7	13.1	12.6
		20+20+20+60	1.67	1.67	1.67	5.00	-	-	4.4	10.0	12.0	1100	3020	4050	13.7	13.1	12.6
		20+20+25+25	2.00	2.00	2.50	2.50	-	-	4.4	9.0	12.0	1100	2520	4050	11.5	11.0	10.5
		20+20+25+35	2.00	2.00	2.50	3.50	-	-	4.4	10.0	12.0	1100	3030	4050	13.8	13.2	12.6
		20+20+25+50	1.74	1.74	2.17	4.35	-	-	4.4	10.0	12.0	1100	3020	4050	13.7	13.1	12.6
		20+20+25+60	1.60	1.60	2.00	4.80	-	-	4.4	10.0	12.0	1100	3010	4050	13.7	13.1	12.6
		20+20+35+35	1.82	1.82	3.18	3.18	-	-	4.4	10.0	12.0	1100	3020	4050	13.7	13.1	12.6
		20+20+35+50	1.60	1.60	2.80	4.00	-	-	4.4	10.0	12.0	1100	3010	4050	13.7	13.1	12.6
		20+20+35+60	1.48	1.48	2.59	4.44	-	-	4.4	10.0	12.0	1100	3010	4050	13.7	13.1	12.6
		20+20+50+50	1.43	1.43	3.57	3.57	-	-	4.4	10.0	12.0	1100	3010	4050	13.7	13.1	12.6
		20+20+50+60	1.33	1.33	3.33	4.00	-	-	4.4	10.0	12.0	1100	3000	4050	13.7	13.1	12.5
		20+20+60+60	1.25	1.25	3.75	3.75	-	-	4.4	10.0	12.0	1100	2990	4050	13.6	13.0	12.5
		20+25+25+25	2.00	2.50	2.50	2.50	-	-	4.4	9.5	12.0	1100	2820	4050	12.8	12.3	11.8
		20+25+25+35	1.90	2.38	2.38	3.33	-	-	4.4	10.0	12.0	1100	3030	4050	13.8	13.2	12.6
		20+25+25+50	1.67	2.08	2.08	4.17	-	-	4.4	10.0	12.0	1100	3020	4050	13.7	13.1	12.6
		20+25+25+60	1.54	1.92	1.92	4.62	-	-	4.4	10.0	12.0	1100	3010	4050	13.7	13.1	12.6
		20+25+35+35	1.74	2.17	3.04	3.04	-	-	4.4	10.0	12.0	1100	3020	4050	13.7	13.1	12.6
		20+25+35+50	1.54	1.92	2.69	3.85	-	-	4.4	10.0	12.0	1100	3010	4050	13.7	13.1	12.6
		20+25+35+60	1.43	1.79	2.50	4.29	-	-	4.4	10.0	12.0	1100	3010	4050	13.7	13.1	12.6
		20+25+50+50	1.38	1.72	3.45	3.45	-	-	4.4	10.0	12.0	1100	3000	4050	13.7	13.1	12.5
		20+25+50+60	1.29	1.61	3.23	3.87	-	-	4.4	10.0	12.0	1100	3000	4050	13.7	13.1	12.5
		20+25+60+60	1.21	1.52	3.64	3.64	-	-	4.4	10.0	12.0	1100	2990	4050	13.6	13.0	12.5
		20+35+35+35	1.60	2.80	2.80	2.80	-	-	4.4	10.0	12.0	1100	3010	4050	13.7	13.1	12.6
		20+35+35+50	1.43	2.50	2.50	3.57	-	-	4.4	10.0	12.0	1100	3010	4050	13.7	13.1	12.6
		20+35+35+60	1.33	2.33	2.33	4.00	-	-	4.4	10.0	12.0	1100	3000	4050	13.7	13.1	12.5
		20+35+50+50	1.29	2.26	3.23	3.23	-	-	4.4	10.0	12.0	1100	3000	4050	13.7	13.1	12.5
		25+25+25+25	2.50	2.50	2.50	2.50	-	-	4.4	10.0	12.0	1100	3030	4050	13.8	13.2	12.6
		25+25+25+35	2.27	2.27	2.27	3.18	-	-	4.4	10.0	12.0	1100	3020	4050	13.7	13.1	12.6
		25+25+25+50	2.00	2.00	2.00	4.00	-	-	4.4	10.0	12.0	1100	3010	4050	13.7	13.1	12.6
		25+25+25+60	1.85	1.85	1.85	4.44	-	-	4.4	10.0	12.0	1100	3010	4050	13.7	13.1	12.6
		25+25+35+35	2.08	2.08	2.92	2.92	-	-	4.4	10.0	12.0	1100	3020	4050	13.7	13.1	12.6
		25+25+35+50	1.85	1.85	2.59	3.70	-	-	4.4	10.0	12.0	1100	3010	4050	13.7	13.1	12.6
		25+25+35+60	1.72	1.72	2.41	4.14			4.4	10.0	12.0	1100	3000	4050	13.7	13.1	12.5
		25+25+50+50	1.67	1.67	3.33	3.33	-	-	4.4	10.0	12.0	1100	3000	4050	13.7	13.1	12.5
		25+25+50+60	1.56	1.56	3.13	3.75	-	-	4.4	10.0	12.0	1100	2990	4050	13.6	13.0	12.5
		25+35+35+35	1.92	2.69	2.69	2.69	-	-	4.4	10.0	12.0	1100	3010	4050	13.7	13.1	12.6
		25+35+35+50	1.72	2.41	2.41	3.45	-	-	4.4	10.0	12.0	1100	3000	4050	13.7	13.1	12.5
		25+35+35+60	1.61	2.26	2.26	3.87	-	-	4.4	10.0	12.0	1100	3000	4050	13.7	13.1	12.5
		25+35+50+50	1.56	2.19	3.13	3.13	-	-	4.4	10.0	12.0	1100	2990	4050	13.6	13.0	12.5
		35+35+35+35	2.50	2.50	2.50	2.50	-	-	4.4	10.0	12.0	1100	3010	4050	13.7	13.1	12.6
		35+35+35+50	2.26	2.26	2.26	3.23	-	-	4.4	10.0	12.0	1100	3000	4050	13.7	13.1	12.5
	5 room	20+20+20+20+20	2.00	2.00	2.00	2.00	2.00	-	5.1	10.0	12.0	1210	2860	4030	13.0	12.4	11.9
		20+20+20+20+25	1.90	1.90	1.90	1.90	2.38	-	5.1	10.0	12.0	1210	2860	4030	13.0	12.4	11.9
		20+20+20+20+35	1.74	1.74	1.74	1.74	3.04	-	5.1	10.0	12.0	1210	2850	4030	13.0	12.4	11.9
		20+20+20+20+50	1.54	1.54	1.54	1.54	3.85	-	5.1	10.0	12.0	1210	2840	4030	12.9	12.4	11.8
		20+20+20+20+60	1.43	1.43	1.43	1.43	4.29	-	5.1	10.0	12.0	1210	2840	4030	12.9	12.4	11.8
		20+20+20+25+25	1.82	1.82	1.82	2.27	2.27	-	5.1	10.0	12.0	1210	2860	4030	13.0	12.4	11.9
		20+20+20+25+35	1.67	1.67	1.67	2.08	2.92	-	5.1	10.0	12.0	1210	2850	4030	13.0	12.4	11.9
		20+20+20+25+50	1.48	1.48	1.48	1.85	3.70	-	5.1	10.0	12.0	1210	2840	4030	12.9	12.4	11.8
		20+20+20+25+60	1.38	1.38	1.38	1.72	4.14	-	5.1	10.0	12.0	1210	2840	4030	12.9	12.4	11.8

Indoor unit combination			Cooling capacity (kW)									Power consumption(W)			Standard current(A)		
			Room cooling capacity						Total capacity			Min.	Standard	Max.	220V	230V	240V
			A	B	C	D	E	F	Min.	Standard	Max.						
Cooling operation	5 room	20+20+20+35+35	1.54	1.54	1.54	2.69	2.69	-	5.1	10.0	12.0	1210	2840	4030	12.9	12.4	11.8
		20+20+20+35+50	1.38	1.38	1.38	2.41	3.45	-	5.1	10.0	12.0	1210	2840	4030	12.9	12.4	11.8
		20+20+20+35+60	1.29	1.29	1.29	2.26	3.87	-	5.1	10.0	12.0	1210	2830	4030	12.9	12.3	11.8
		20+20+20+50+50	1.25	1.25	1.25	3.13	3.13	-	5.1	10.0	12.0	1210	2830	4030	12.9	12.3	11.8
		20+20+25+25+25	1.74	1.74	2.17	2.17	2.17	-	5.1	10.0	12.0	1210	2850	4030	13.0	12.4	11.9
		20+20+25+25+35	1.60	1.60	2.00	2.00	2.80	-	5.1	10.0	12.0	1210	2850	4030	13.0	12.4	11.9
		20+20+25+25+50	1.43	1.43	1.79	1.79	3.57	-	5.1	10.0	12.0	1210	2840	4030	12.9	12.4	11.8
		20+20+25+25+60	1.33	1.33	1.67	1.67	4.00	-	5.1	10.0	12.0	1210	2840	4030	12.9	12.4	11.8
		20+20+25+35+35	1.48	1.48	1.85	2.59	2.59	-	5.1	10.0	12.0	1210	2840	4030	12.9	12.4	11.8
		20+20+25+35+50	1.33	1.33	1.67	2.33	3.33	-	5.1	10.0	12.0	1210	2840	4030	12.9	12.4	11.8
		20+20+25+35+60	1.25	1.25	1.56	2.19	3.75	-	5.1	10.0	12.0	1210	2830	4030	12.9	12.3	11.8
		20+20+35+35+35	1.38	1.38	2.41	2.41	2.41	-	5.1	10.0	12.0	1210	2840	4030	12.9	12.4	11.8
		20+20+35+35+50	1.25	1.25	2.19	2.19	3.13	-	5.1	10.0	12.0	1210	2830	4030	12.9	12.3	11.8
		20+25+25+25+25	1.67	2.08	2.08	2.08	2.08	-	5.1	10.0	12.0	1210	2850	4030	13.0	12.4	11.9
		20+25+25+25+35	1.54	1.92	1.92	1.92	2.69	-	5.1	10.0	12.0	1210	2840	4030	12.9	12.4	11.8
		20+25+25+25+50	1.38	1.72	1.72	1.72	3.45	-	5.1	10.0	12.0	1210	2840	4030	12.9	12.4	11.8
		20+25+25+25+60	1.29	1.61	1.61	1.61	3.87	-	5.1	10.0	12.0	1210	2830	4030	12.9	12.3	11.8
		20+25+25+35+35	1.43	1.79	1.79	2.50	2.50	-	5.1	10.0	12.0	1210	2840	4030	12.9	12.4	11.8
		20+25+25+35+50	1.29	1.61	1.61	2.26	3.23	-	5.1	10.0	12.0	1210	2830	4030	12.9	12.3	11.8
		20+25+35+35+35	1.33	1.67	2.33	2.33	2.33	-	5.1	10.0	12.0	1210	2840	4030	12.9	12.4	11.8
		20+35+35+35+35	1.25	2.19	2.19	2.19	2.19	-	5.1	10.0	12.0	1210	2830	4030	12.9	12.3	11.8
		25+25+25+25+25	2.00	2.00	2.00	2.00	2.00	-	5.1	10.0	12.0	1210	2850	4030	13.0	12.4	11.9
		25+25+25+25+35	1.85	1.85	1.85	1.85	2.59	-	5.1	10.0	12.0	1210	2840	4030	12.9	12.4	11.8
		25+25+25+25+50	1.67	1.67	1.67	1.67	3.33	-	5.1	10.0	12.0	1210	2840	4030	12.9	12.4	11.8
		25+25+25+25+60	1.56	1.56	1.56	1.56	3.75	-	5.1	10.0	12.0	1210	2830	4030	12.9	12.3	11.8
		25+25+25+35+35	1.72	1.72	1.72	2.41	2.41	-	5.1	10.0	12.0	1210	2840	4030	12.9	12.4	11.8
		25+25+25+35+50	1.56	1.56	1.56	2.19	3.13	-	5.1	10.0	12.0	1210	2830	4030	12.9	12.3	11.8
		25+25+35+35+35	1.61	1.61	2.26	2.26	2.26	-	5.1	10.0	12.0	1210	2830	4030	12.9	12.3	11.8

SCM100ZM-S Table of Indoor unit combination with other indoor unit

Indoor unit combination			Heating capacity (kW)									Power consumption(W)			Standard current(A)		
			Room heating capacity						Total capacity			Min.	Standard	Max.	220V	230V	240V
			A	B	C	D	E	F	Min.	Standard	Max.						
Heating operation	1 room	20	3.0	-	-	-	-	-	1.5	3.0	3.6	700	1220	1330	5.6	5.4	5.1
		25	3.4	-	-	-	-	-	1.5	3.4	4.1	700	1265	1540	5.8	5.6	5.3
		35	4.5	-	-	-	-	-	1.5	4.5	4.9	700	1650	1840	7.6	7.2	6.9
		50	5.8	-	-	-	-	-	1.5	5.8	6.4	700	2120	2410	9.7	9.3	8.9
		60	6.8	-	-	-	-	-	1.5	6.8	7.4	700	2500	2760	11.5	11.0	10.5
		71	8.0	-	-	-	-	-	1.5	8.0	8.1	700	3020	3090	13.9	13.3	12.7
	2 room	20+20	3.00	3.00	-	-	-	-	2.1	6.0	7.2	750	1540	1860	7.1	6.8	6.5
		20+25	2.84	3.56	-	-	-	-	2.1	6.4	7.7	750	1660	2210	7.6	7.3	7.0
		20+35	2.73	4.77	-	-	-	-	2.1	7.5	8.5	750	1990	2520	9.1	8.7	8.4
		20+50	2.51	6.29	-	-	-	-	2.1	8.8	10.0	750	2430	3220	11.2	10.7	10.2
		20+60	2.45	7.35	-	-	-	-	2.1	9.8	11.0	750	2840	3620	13.0	12.5	12.0
		20+71	2.42	8.58	-	-	-	-	2.1	11.0	11.6	750	2840	3620	13.0	12.5	12.0
		25+25	3.40	3.40	-	-	-	-	2.1	6.8	8.2	750	1770	2420	8.1	7.8	7.4
		25+35	3.29	4.61	-	-	-	-	2.1	7.9	9.0	750	2140	2820	9.8	9.4	9.0
		25+50	3.07	6.13	-	-	-	-	2.1	9.2	10.5	750	2630	3610	12.1	11.6	11.1
		25+60	3.00	7.20	-	-	-	-	2.1	10.2	11.5	750	3040	3790	14.0	13.4	12.8
		25+71	2.97	8.43	-	-	-	-	2.1	11.4	12.1	750	3440	4250	15.8	15.1	14.5
		35+35	4.50	4.50	-	-	-	-	2.1	9.0	9.8	750	2520	3210	11.6	11.1	10.6
		35+50	4.24	6.06	-	-	-	-	2.1	10.3	11.3	750	3040	3710	14.0	13.4	12.8
		35+60	4.16	7.14	-	-	-	-	2.1	11.3	12.3	750	3420	4320	15.7	15.0	14.4
		35+71	3.96	8.04	-	-	-	-	2.1	12.0	12.9	750	4030	4690	18.5	17.7	17.0
		50+50	5.80	5.80	-	-	-	-	2.1	11.6	12.8	750	3660	4620	16.8	16.1	15.4
		50+60	5.45	6.55	-	-	-	-	2.1	12.0	13.3	750	4030	4920	18.5	17.7	17.0
		50+71	4.96	7.04					2.1	12.0	13.3	750	4030	4920	18.5	17.7	17.0
		60+60	6.00	6.00	-	-	-	-	2.1	12.0	13.3	750	4030	4920	18.5	17.7	17.0
		60+71	5.50	6.50	-	-	-	-	2.1	12.0	13.3	750	4030	4920	18.5	17.7	17.0
		71+71	6.00	6.00	-	-	-	-	2.1	12.0	13.3	750	4030	4920	18.5	17.7	17.0
	3 room	20+20+20	3.00	3.00	3.00	-	-	-	3.2	9.0	10.9	780	2270	3350	10.4	10.0	9.6
		20+20+25	2.89	2.89	3.62	-	-	-	3.2	9.4	11.4	780	2400	3550	11.0	10.5	10.1
		20+20+35	2.80	2.80	4.90	-	-	-	3.2	10.5	12.2	780	2760	3820	12.7	12.1	11.6
		20+20+50	2.62	2.62	6.56	-	-	-	3.2	11.8	13.3	780	3270	4290	15.0	14.4	13.8
		20+20+60	2.40	2.40	7.20	-	-	-	3.2	12.0	13.3	780	3420	4290	15.7	15.0	14.4
		20+20+71	2.16	2.16	7.68	-	-	-	3.2	12.0	13.3	780	3410	4290	15.7	15.0	14.4
		20+25+25	2.80	3.50	3.50	-	-	-	3.2	9.8	11.9	780	2560	3720	11.8	11.2	10.8
		20+25+35	2.73	3.41	4.77	-	-	-	3.2	10.9	12.7	780	2970	3990	13.6	13.0	12.5
		20+25+50	2.53	3.16	6.32	-	-	-	3.2	12.0	13.3	780	3420	4290	15.7	15.0	14.4
		20+25+60	2.29	2.86	6.86	-	-	-	3.2	12.0	13.3	780	3420	4290	15.7	15.0	14.4
		20+25+71	2.07	2.59	7.34	-	-	-	3.2	12.0	13.3	780	3410	4290	15.7	15.0	14.4
		20+35+35	2.67	4.67	4.67	-	-	-	3.2	12.0	13.3	780	3420	4290	15.7	15.0	14.4
		20+35+50	2.29	4.00	5.71	-	-	-	3.2	12.0	13.3	780	3420	4290	15.7	15.0	14.4
		20+35+60	2.09	3.65	6.26	-	-	-	3.2	12.0	13.3	780	3410	4290	15.7	15.0	14.4
		20+35+71	1.90	3.33	6.76	-	-	-	3.2	12.0	13.3	780	3410	4290	15.7	15.0	14.4
		20+50+50	2.00	5.00	5.00	-	-	-	3.2	12.0	13.3	780	3410	4290	15.7	15.0	14.4
		20+50+60	1.85	4.62	5.54	-	-	-	3.2	12.0	13.3	780	3400	4290	15.6	14.9	14.3
		20+50+71	1.70	4.26	6.04	-	-	-	4.2	12.0	13.3	780	3390	4290	15.6	14.9	14.3
		20+60+60	1.71	5.14	5.14	-	-	-	5.2	12.0	13.3	780	3390	4290	15.6	14.9	14.3
		20+60+71	1.59	4.77	5.64	-	-	-	6.2	12.0	13.3	780	3390	4290	15.6	14.9	14.3
		25+25+25	3.40	3.40	3.40	-	-	-	3.2	10.2	12.4	780	2760	3880	12.7	12.1	11.6
		25+25+35	3.32	3.32	4.65	-	-	-	3.2	11.3	13.2	780	3170	4120	14.6	13.9	13.3
		25+25+50	3.00	3.00	6.00	-	-	-	3.2	12.0	13.3	780	3420	4290	15.7	15.0	14.4
		25+25+60	2.73	2.73	6.55	-	-	-	3.2	12.0	13.3	780	3410	4290	15.7	15.0	14.4
		25+25+71	2.48	2.48	7.04	-	-	-	3.2	12.0	13.3	780	3410	4290	15.7	15.0	14.4
		25+35+35	3.16	4.42	4.42	-	-	-	3.2	12.0	13.3	780	3420	4290	15.7	15.0	14.4
		25+35+50	2.73	3.82	5.45	-	-	-	3.2	12.0	13.3	780	3410	4290	15.7	15.0	14.4
		25+35+60	2.50	3.50	6.00	-	-	-	3.2	12.0	13.3	780	3410	4290	15.7	15.0	14.4
		25+35+71	2.29	3.21	6.50	-	-	-	4.2	12.0	13.3	780	3400	4290	15.6	14.9	14.3
		25+50+50	2.40	4.80	4.80	-	-	-	3.2	12.0	13.3	780	3410	4290	15.7	15.0	14.4

MULTI-SPLIT SYSTEM

Indoor unit combination			Heating capacity (kW)									Power consumption(W)			Standard current(A)		
			Room heating capacity						Total capacity			Min.	Standard	Max.	220V	230V	240V
			A	B	C	D	E	F	Min.	Standard	Max.						
Heating operation	3 room	25+50+60	2.22	4.44	5.33	-	-	-	3.2	12.0	13.3	780	3400	4290	15.6	14.9	14.3
		25+50+71	2.05	4.11	5.84	-	-	-	3.2	12.0	13.3	780	3390	4290	15.6	14.9	14.3
		25+60+60	2.07	4.97	4.97	-	-	-	3.2	12.0	13.3	780	3390	4290	15.6	14.9	14.3
		25+60+71	1.92	4.62	5.46	-	-	-	3.2	12.0	13.3	780	3390	4290	15.6	14.9	14.3
		35+35+35	4.00	4.00	4.00	-	-	-	3.2	12.0	13.3	780	3420	4290	15.7	15.0	14.4
		35+35+50	3.50	3.50	5.00	-	-	-	3.2	12.0	13.3	780	3410	4290	15.7	15.0	14.4
		35+35+60	3.23	3.23	5.54	-	-	-	3.2	12.0	13.3	780	3400	4290	15.6	14.9	14.3
		35+35+71	2.98	2.98	6.04	-	-	-	3.2	12.0	13.3	780	3390	4290	15.6	14.9	14.3
		35+50+50	3.11	4.44	4.44	-	-	-	3.2	12.0	13.3	780	3400	4290	15.6	14.9	14.3
		35+50+60	2.90	4.14	4.97	-	-	-	3.2	12.0	13.3	780	3390	4290	15.6	14.9	14.3
		35+50+71	2.69	3.85	5.46	-	-	-	3.2	12.0	13.3	780	3390	4290	15.6	14.9	14.3
		35+60+60	2.71	4.65	4.65	-	-	-	3.2	12.0	13.3	780	3390	4290	15.6	14.9	14.3
		50+50+50	4.00	4.00	4.00	-	-	-	3.2	12.0	13.3	780	3390	4290	15.6	14.9	14.3
		50+50+60	3.75	3.75	4.50	-	-	-	3.2	12.0	13.3	780	3380	4290	15.5	14.8	14.2
	4 room	20+20+20+20	3.00	3.00	3.00	3.00	-	-	3.6	12.0	13.3	950	3270	3920	14.9	14.2	13.6
		20+20+20+25	2.82	2.82	2.82	3.53	-	-	3.6	12.0	13.3	950	3270	3920	14.9	14.2	13.6
		20+20+20+35	2.53	2.53	2.53	4.42	-	-	3.6	12.0	13.3	950	3270	3920	14.9	14.2	13.6
		20+20+20+50	2.18	2.18	2.18	5.45	-	-	3.6	12.0	13.3	950	3260	3920	14.8	14.2	13.6
		20+20+20+60	2.00	2.00	2.00	6.00	-	-	3.6	12.0	13.3	950	3250	3920	14.8	14.1	13.6
		20+20+20+71	1.83	1.83	1.83	6.50	-	-	3.6	12.0	13.3	950	3250	3920	14.6	14.0	13.4
		20+20+25+25	2.67	2.67	3.33	3.33	-	-	3.6	12.0	13.3	950	3270	3920	14.9	14.2	13.6
		20+20+25+35	2.40	2.40	3.00	4.20	-	-	3.6	12.0	13.3	950	3260	3920	14.8	14.2	13.6
		20+20+25+50	2.09	2.09	2.61	5.22	-	-	3.6	12.0	13.3	950	3260	3920	14.8	14.2	13.6
		20+20+25+60	1.92	1.92	2.40	5.76	-	-	3.6	12.0	13.3	950	3250	3920	14.8	14.1	13.6
		20+20+25+71	1.76	1.76	2.21	6.26	-	-	3.6	12.0	13.3	950	3250	3920	14.8	14.1	13.6
		20+20+35+35	2.18	2.18	3.82	3.82	-	-	3.6	12.0	13.3	950	3260	3920	14.8	14.2	13.6
		20+20+35+50	1.92	1.92	3.36	4.80	-	-	3.6	12.0	13.3	950	3250	3920	14.8	14.1	13.6
		20+20+35+60	1.78	1.78	3.11	5.33	-	-	3.6	12.0	13.3	950	3250	3920	14.8	14.1	13.6
		20+20+35+71	1.64	1.64	2.88	5.84	-	-	3.6	12.0	13.3	950	3240	3920	14.7	14.1	13.5
		20+20+50+50	1.71	1.71	4.29	4.29	-	-	3.6	12.0	13.3	950	3240	3920	14.7	14.1	13.5
		20+20+50+60	1.60	1.60	4.00	4.80	-	-	3.6	12.0	13.3	950	3240	3920	14.7	14.1	13.5
		20+20+60+60	1.50	1.50	4.50	4.50	-	-	3.6	12.0	13.3	950	3240	3920	14.7	14.1	13.5
		20+25+25+25	2.53	3.16	3.16	3.16	-	-	3.6	12.0	13.3	950	3270	3920	14.9	14.2	13.6
		20+25+25+35	2.29	2.86	2.86	4.00	-	-	3.6	12.0	13.3	950	3260	3920	14.8	14.2	13.6
		20+25+25+50	2.00	2.50	2.50	5.00	-	-	3.6	12.0	13.3	950	3250	3920	14.8	14.1	13.6
		20+25+25+60	1.85	2.31	2.31	5.54	-	-	3.6	12.0	13.3	950	3250	3920	14.8	14.1	13.6
		20+25+25+71	1.70	2.13	2.13	6.04	-	-	3.6	12.0	13.3	950	3240	3920	14.7	14.1	13.5
		20+25+35+35	2.09	2.61	3.65	3.65	-	-	3.6	12.0	13.3	950	3260	3920	14.8	14.2	13.6
		20+25+35+50	1.85	2.31	3.23	4.62	-	-	3.6	12.0	13.3	950	3250	3920	14.8	14.1	13.6
		20+25+35+60	1.71	2.14	3.00	5.14	-	-	3.6	12.0	13.3	950	3240	3920	14.7	14.1	13.5
		20+25+35+71	1.59	1.99	2.78	5.64	-	-	3.6	12.0	13.3	950	3240	3920	14.7	14.1	13.5
		20+25+50+50	1.66	2.07	4.14	4.14	-	-	3.6	12.0	13.3	950	3240	3920	14.7	14.1	13.5
		20+25+50+60	1.55	1.94	3.87	4.65	-	-	3.6	12.0	13.3	950	3240	3920	14.7	14.1	13.5
		20+35+35+35	1.92	3.36	3.36	3.36	-	-	3.6	12.0	13.3	950	3250	3920	14.8	14.1	13.6
		20+35+35+50	1.71	3.00	3.00	4.29	-	-	3.6	12.0	13.3	950	3240	3920	14.7	14.1	13.5
		20+35+35+60	1.60	2.80	2.80	4.80	-	-	3.6	12.0	13.3	950	3240	3920	14.7	14.1	13.5
		20+35+50+50	1.55	2.71	3.87	3.87	-	-	3.6	12.0	13.3	950	3240	3920	14.7	14.1	13.5
		25+25+25+25	3.00	3.00	3.00	3.00	-	-	3.6	12.0	13.3	950	3260	3920	14.8	14.2	13.6
		25+25+25+35	2.73	2.73	2.73	3.82	-	-	3.6	12.0	13.3	950	3260	3920	14.8	14.2	13.6
		25+25+25+50	2.40	2.40	2.40	4.80	-	-	3.6	12.0	13.3	950	3250	3920	14.8	14.1	13.6
		25+25+25+60	2.22	2.22	2.22	5.33	-	-	3.6	12.0	13.3	950	3250	3920	14.8	14.1	13.6
		25+25+25+71	2.05	2.05	2.05	5.84	-	-	3.6	12.0	13.3	950	3240	3920	14.7	14.1	13.5
		25+25+35+35	2.50	2.50	3.50	3.50	-	-	3.6	12.0	13.3	950	3250	3920	14.8	14.1	13.6
		25+25+35+50	2.22	2.22	3.11	4.44	-	-	3.6	12.0	13.3	950	3250	3920	14.8	14.1	13.6
		25+25+35+60	2.07	2.07	2.90	4.97	-	-	3.6	12.0	13.3	950	3240	3920	14.7	14.1	13.5
		25+25+35+71	1.92	1.92	2.69	5.46	-	-	3.6	12.0	13.3	950	3240	3920	14.7	14.1	13.5
		25+25+50+50	2.00	2.00	4.00	4.00	-	-	3.6	12.0	13.3	950	3240	3920	14.7	14.1	13.5
		25+25+50+60	1.88	1.88	3.75	4.50	-	-	3.6	12.0	13.3	950	3240	3920	14.7	14.1	13.5
		25+35+35+35	2.31	3.23	3.23	3.23	-	-	3.6	12.0	13.3	950	3250	3920	14.8	14.1	13.6
		25+35+35+50	2.07	2.90	2.90	4.14	-	-	3.6	12.0	13.3	950	3240	3920	14.7	14.1	13.5
		25+35+35+60	1.94	2.71	2.71	4.65	-	-	3.6	12.0	13.3	950	3240	3920	14.7	14.1	13.5
		25+35+50+50	1.88	2.63	3.75	3.75	-	-	3.6	12.0	13.3	950	3240	3920	14.7	14.1	13.5
		35+35+35+35	3.00	3.00	3.00	3.00	-	-	3.6	12.0	13.3	950	3240	3920	14.7	14.1	13.5
		35+35+35+50	2.71	2.71	2.71	3.87	-	-	3.6	12.0	13.3	950	3240	3920	14.7	14.1	13.5
	5 room	20+20+20+20+20	2.40	2.40	2.40	2.40	2.40	-	4.0	12.0	13.3	1050	3220	3620	14.7	14.0	13.4
		20+20+20+20+25	2.29	2.29	2.29	2.29	2.86	-	4.0	12.0	13.3	1050	3220	3620	14.7	14.0	13.4
		20+20+20+20+35	2.09	2.09	2.09	2.09	3.65	-	4.0	12.0	13.3	1050	3210	3620	14.6	14.0	13.4
		20+20+20+20+50	1.85	1.85	1.85	1.85	4.62	-	4.0	12.0	13.3	1050	3200	3620	14.6	13.9	13.3
		20+20+20+20+60	1.71	1.71	1.71	1.71	5.14	-	4.0	12.0	13.3	1050	3200	3620	14.6	13.9	13.3
		20+20+20+20+71	1.59	1.59	1.59	1.59	5.64	-	4.0	12.0	13.3	1050	3190	3620	14.5	13.9	13.3
		20+20+20+25+25	2.18	2.18	2.18	2.73	2.73	-	4.0	12.0	13.3	1050	3210	3620	14.6	14.0	13.4
		20+20+20+25+35	2.00	2.00	2.00	2.50	3.50	-	4.0	12.0	13.3	1050	3210	3620	14.6	14.0	13.4
		20+20+20+25+50	1.78	1.78	1.78	2.22	4.44	-	4.0	12.0	13.3	1050	3200	3620	14.6	13.9	13.3
		20+20+20+25+60	1.66	1.66	1.66	2.07	4.97	-	4.0	12.0	13.3	1050	3200	3620	14.6	13.9	13.3
		20+20+20+25+71	1.54	1.54	1.54	1.92	5.46	-	4.0	12.0	13.3	1050	3190	3620	14.5	13.9	13.3
		20+20+20+35+35	1.85	1.85	1.85	3.23	3.23	-	4.0	12.0	13.3	1050	3200	3620	14.6	13.9	13.3
		20+20+20+35+50	1.66	1.66	1.66	2.90	4.14	-	4.0	12.0	13.3	1050	3200	3620	14.6	13.9	13.3
		20+20+20+35+60	1.55	1.55	1.55	2.71	4.65	-	4.0	12.0	13.3	1050	3190	3620	14.5	13.9	13.3
		20+20+20+50+50	1.50	1.50	1.50	3.75	3.75	-	4.0	12.0	13.3	1050	3190	3620	14.5	13.9	13.3
		20+20+25+25+25	2.09	2.09	2.61	2.61	2.61	-	4.0	12.0	13.3	1050	3210	3620	14.6	14.0	13.4
		20+20+25+25+35	1.92	1.92	2.40	2.40	3.36	-	4.0	12.0	13.3	1050	3210	3620	14.6	14.0	13.4
		20+20+25+25+50	1.71	1.71	2.14	2.14	4.29	-	4.0	12.0	13.3	1050	3200	3620	14.6	13.9	13.3
		20+20+25+25+60	1.60	1.60	2.00	2.00	4.80	-	4.0	12.0	13.3	1050	3190	3620	14.5	13.9	13.3
		20+20+25+35+35	1.78	1.78	2.22	3.11	3.11	-	4.0	12.0	13.3	1050	3200	3620	14.6	13.9	13.3
		20+20+25+35+50	1.60	1.60	2.00	2.80	4.00	-	4.0	12.0	13.3	1050	3190	3620	14.5	13.9	13.3
		20+20+25+35+60	1.50	1.50	1.88	2.63	4.50	-	4.0	12.0	13.3	1050	3190	3620	14.5	13.9	13.3
		20+20+35+35+35	1.66	1.66	2.90	2.90	2.90	-	4.0	12.0	13.3	1050	3200	3620	14.6	13.9	13.3
		20+20+35+35+50	1.50	1.50	2.63	2.63	3.75	-	4.0	12.0	13.3	1050	3190	3620	14.5	13.9	13.3
		20+25+25+25+25	2.00	2.50	2.50	2.50	2.50	-	4.0	12.0	13.3	1050	3210	3620	14.6	14.0	13.4
		20+25+25+25+35	1.85	2.31	2.31	2.31	3.23	-	4.0	12.0	13.3	1050	3200	3620	14.6	13.9	13.3
		20+25+25+25+50	1.66	2.07	2.07	2.07	4.14	-	4.0	12.0	13.3	1050	3200	3620	14.6	13.9	13.3
		20+25+25+25+60	1.55	1.94	1.94	1.94	4.65	-	4.0	12.0	13.3	1050	3190	3620	14.5	13.9	13.3
		20+25+25+35+35	1.71	2.14	2.14	3.00	3.00	-	4.0	12.0	13.3	1050	3200	3620	14.6	13.9	13.3
		20+25+25+35+50	1.55	1.94	1.94	2.71	3.87	-	4.0	12.0	13.3	1050	3190	3620	14.5	13.9	13.3

Indoor unit combination			Heating capacity (kW)									Power consumption(W)			Standard current(A)		
			Room heating capacity						Total capacity			Min.	Standard	Max.	220V	230V	240V
			A	B	C	D	E	F	Min.	Standard	Max.						
Heating operation	5 room	20+25+35+35+35	1.60	2.00	2.80	2.80	2.80	-	4.0	12.0	13.3	1050	3190	3620	14.5	13.9	13.3
		20+35+35+35+35	1.50	2.63	2.63	2.63	2.63	-	4.0	12.0	13.3	1050	3190	3620	14.5	13.9	13.3
		25+25+25+25+25	2.40	2.40	2.40	2.40	2.40	-	4.0	12.0	13.3	1050	3210	3620	14.6	14.0	13.4
		25+25+25+25+35	2.22	2.22	2.22	2.22	3.11	-	4.0	12.0	13.3	1050	3200	3620	14.6	13.9	13.3
		25+25+25+25+50	2.00	2.00	2.00	2.00	4.00	-	4.0	12.0	13.3	1050	3190	3620	14.5	13.9	13.3
		25+25+25+25+60	1.88	1.88	1.88	1.88	4.50	-	4.0	12.0	13.3	1050	3190	3620	14.5	13.9	13.3
		25+25+25+35+35	2.07	2.07	2.07	2.90	2.90	-	4.0	12.0	13.3	1050	3200	3620	14.6	13.9	13.3
		25+25+25+35+50	1.88	1.88	1.88	2.63	3.75	-	4.0	12.0	13.3	1050	3190	3620	14.5	13.9	13.3
		25+25+35+35+35	1.94	1.94	2.71	2.71	2.71	-	4.0	12.0	13.3	1050	3190	3620	14.5	13.9	13.3

Indoor unit combination			Cooling capacity (kW)									Power consumption(W)			Standard current(A)		
			Room cooling capacity						Total capacity			Min.	Standard	Max.	220V	230V	240V
			A	B	C	D	E	F	Min.	Standard	Max.						
Cooling operation	1 room	20	2.0	-	-	-	-	-	1.8	2.0	2.7	650	780	1100	3.6	3.4	3.3
		25	2.5	-	-	-	-	-	1.8	2.5	3.2	650	1000	1350	4.6	4.4	4.2
		35	3.5	-	-	-	-	-	1.8	3.5	3.7	650	1500	1600	6.9	6.6	6.3
		50	5.0	-	-	-	-	-	1.8	5.0	5.8	650	2150	2500	9.9	9.4	9.0
		60	6.0	-	-	-	-	-	1.8	6.0	6.7	650	2720	3000	12.5	11.9	11.4
		71	7.1	-	-	-	-	-	1.8	7.1	7.2	650	3250	3080	14.9	14.3	13.7
	2 room	20+20	2.00	2.00	-	-	-	-	3.0	4.0	5.4	740	960	1460	4.4	4.2	4.0
		20+25	2.00	2.50	-	-	-	-	3.0	4.5	5.9	740	1100	1820	5.1	4.8	4.6
		20+35	2.00	3.50	-	-	-	-	3.0	5.5	6.4	740	1500	2020	6.9	6.6	6.3
		20+50	2.00	5.00	-	-	-	-	3.0	7.0	8.5	740	2290	2820	10.5	10.1	9.6
		20+60	2.00	6.00	-	-	-	-	3.0	8.0	9.4	740	2660	3360	12.2	11.7	11.2
		20+71	2.00	7.10	-	-	-	-	3.0	9.1	9.9	740	3100	3780	14.1	13.5	12.9
		25+25	2.50	2.50	-	-	-	-	3.0	5.0	6.8	740	1420	2200	6.5	6.2	6.0
		25+35	2.50	3.50	-	-	-	-	3.0	6.0	6.9	740	1810	2320	8.3	7.9	7.6
		25+50	2.50	5.00	-	-	-	-	3.0	7.5	9.0	740	2470	3220	11.3	10.8	10.4
		25+60	2.50	6.00	-	-	-	-	3.0	8.5	9.4	740	2810	3360	12.9	12.3	11.8
		25+71	2.53	7.17					3.0	9.7	10.4	740	3350	4020	15.4	14.7	14.1
		35+35	3.50	3.50	-	-	-	-	3.0	7.0	7.4	740	2290	2820	10.5	10.1	9.6
		35+50	3.50	5.00	-	-	-	-	3.0	8.5	9.5	740	2810	3620	12.9	12.3	11.8
		35+60	3.50	6.00	-	-	-	-	3.0	9.5	10.4	740	3280	3990	15.1	14.4	13.8
		35+71	3.30	6.70	-	-	-	-	3.0	10.0	10.9	740	3480	4250	15.8	15.1	14.5
		50+50	5.00	5.00	-	-	-	-	3.0	10.0	11.6	740	3480	4350	16.0	15.3	14.6
		50+60	4.55	5.45	-	-	-	-	3.0	10.0	11.8	740	3480	4410	16.0	15.3	14.6
		50+71	4.13	5.87	-	-	-	-	3.0	10.0	11.8	740	3470	4410	15.8	15.1	14.5
		60+60	5.00	5.00	-	-	-	-	3.0	10.0	11.8	740	3470	4410	15.9	15.2	14.6
		60+71	4.58	5.42	-	-	-	-	3.0	10.0	11.8	740	3470	4410	15.8	15.1	14.5
		71+71	5.00	5.00	-	-	-	-	3.0	10.0	11.8	740	3460	4410	15.6	14.9	14.3
	3 room	20+20+20	2.00	2.00	2.00	-	-	-	3.7	6.0	8.1	880	1530	2490	7.0	6.7	6.4
		20+20+25	2.00	2.00	2.50	-	-	-	3.7	6.5	8.6	880	1730	2700	7.9	7.6	7.3
		20+20+35	2.00	2.00	3.50	-	-	-	3.7	7.5	9.1	880	2080	3120	9.6	9.1	8.8
		20+20+50	2.00	2.00	5.00	-	-	-	3.7	9.0	11.2	880	2730	4000	12.5	12.0	11.5
		20+20+60	2.00	2.00	6.00	-	-	-	3.7	10.0	11.8	880	3280	4250	15.1	14.4	13.8
		20+20+71	1.80	1.80	6.40	-	-	-	3.7	10.0	11.8	880	3280	4250	15.1	14.4	13.8
		20+25+25	2.00	2.50	2.50	-	-	-	3.7	7.0	9.1	880	1940	3210	8.9	8.5	8.2
		20+25+35	2.00	2.50	3.50	-	-	-	3.7	8.0	9.6	880	2440	3630	11.2	10.7	10.3
		20+25+50	2.00	2.50	5.00	-	-	-	3.7	9.5	11.5	880	3130	4120	14.4	13.7	13.2
		20+25+60	1.90	2.38	5.71	-	-	-	3.7	10.0	11.8	880	3280	4250	15.1	14.4	13.8
		20+25+71	1.72	2.16	6.12	-	-	-	3.7	10.0	11.8	880	3280	4250	15.1	14.4	13.8
		20+35+35	2.00	3.50	3.50	-	-	-	3.7	9.0	10.1	880	2920	3640	13.4	12.8	12.3
		20+35+50	1.90	3.33	4.76	-	-	-	3.7	10.0	11.8	880	3280	4250	15.1	14.4	13.8
		20+35+60	1.74	3.04	5.22	-	-	-	3.7	10.0	11.8	880	3280	4250	15.1	14.4	13.8
		20+35+71	1.59	2.78	5.63	-	-	-	4.7	10.0	11.8	880	3270	4250	15.0	14.4	13.8
		20+50+50	1.67	4.17	4.17	-	-	-	3.7	10.0	11.8	880	3270	4250	15.0	14.4	13.8
		20+50+60	1.54	3.85	4.62	-	-	-	3.7	10.0	11.8	880	3270	4250	15.0	14.4	13.8
		20+50+71	1.42	3.55	5.04	-	-	-	3.7	10.0	11.8	880	3260	4250	15.0	14.3	13.7
		20+60+60	1.43	4.29	4.29	-	-	-	3.7	10.0	11.8	880	3260	4250	15.0	14.3	13.7
		20+60+71	1.32	3.97	4.70	-	-	-	3.7	10.0	11.8	880	3260	4250	15.0	14.3	13.7
		25+25+25	2.50	2.50	2.50	-	-	-	3.7	7.5	9.4	880	2130	3340	9.8	9.4	9.0
		25+25+35	2.50	2.50	3.50	-	-	-	3.7	8.5	9.9	880	2650	3540	12.2	11.6	11.2
		25+25+50	2.50	2.50	5.00	-	-	-	3.7	10.0	11.8	880	3280	4250	15.1	14.4	13.8
		25+25+60	2.27	2.27	5.45	-	-	-	3.7	10.0	11.8	880	3280	4250	15.1	14.4	13.8
		25+25+71	2.07	2.07	5.87				3.7	10.0	11.8	880	3270	4250	15.0	14.4	13.8
		25+35+35	2.50	3.50	3.50	-	-	-	3.7	9.5	10.4	880	3130	3950	14.4	13.7	13.2
		25+35+50	2.27	3.18	4.55	-	-	-	3.7	10.0	11.8	880	3280	4250	15.1	14.4	13.8
		25+35+60	2.08	2.92	5.00	-	-	-	3.7	10.0	11.8	880	3270	4250	15.0	14.4	13.8
		25+35+71	1.91	2.67	5.42				3.7	10.0	11.8	880	3270	4250	15.0	14.4	13.8
		25+50+50	2.00	4.00	4.00	-	-	-	3.7	10.0	11.8	880	3270	4250	15.0	14.4	13.8
		25+50+60	1.85	3.70	4.44	-	-	-	3.7	10.0	11.8	880	3270	4250	15.0	14.4	13.8
		25+50+71	1.71	3.42	4.86	-	-	-	3.7	10.0	11.8	880	3260	4250	21.4	20.5	19.7
		25+60+60	1.72	4.14	4.14	-	-	-	3.7	10.0	11.8	880	3260	4250	21.4	20.5	19.7
		25+60+71	1.60	3.85	4.55	-	-	-	3.7	10.0	11.8	880	3260	4250	21.4	20.5	19.7
		35+35+35	3.33	3.33	3.33	-	-	-	3.7	10.0	10.9	880	3280	4120	15.1	14.4	13.8
		35+35+50	2.92	2.92	4.17	-	-	-	3.7	10.0	11.8	880	3270	4250	15.0	14.4	13.8
		35+35+60	2.69	2.69	4.62	-	-	-	3.7	10.0	11.8	880	3270	4250	15.0	14.4	13.8
		35+35+71	2.48	2.48	5.04	-	-	-	3.7	10.0	11.8	880	3260	4250	14.8	14.2	13.6
		35+50+50	2.59	3.70	3.70	-	-	-	3.7	10.0	11.8	880	3270	4250	15.0	14.4	13.8
		35+50+60	2.41	3.45	4.14	-	-	-	3.7	10.0	11.8	880	3260	4250	15.0	14.3	13.7
		35+50+71	2.24	3.21	4.55	-	-	-	3.7	10.0	11.8	880	3260	4250	15.0	14.3	13.7
		35+60+60	2.26	3.87	3.87	-	-	-	3.7	10.0	11.8	880	3260	4250	15.0	14.3	13.7
		50+50+50	3.33	3.33	3.33	-	-	-	3.7	10.0	11.8	880	3260	4250	15.0	14.3	13.7
		50+50+60	3.13	3.13	3.75	-	-	-	3.7	10.0	11.8	880	3260	4250	15.0	14.3	13.7
	4 room	20+20+20+20	2.00	2.00	2.00	2.00	-	-	4.4	8.0	10.8	1100	2110	3680	9.6	9.2	8.8
		20+20+20+25	2.00	2.00	2.00	2.50	-	-	4.4	8.5	11.1	1100	2390	3890	10.9	10.4	10.0
		20+20+20+35	2.00	2.00	2.00	3.50	-	-	4.4	9.5	11.6	1100	2900	3990	13.2	12.6	12.1
		20+20+20+50	1.82	1.82	1.82	4.55	-	-	4.4	10.0	11.8	1100	3210	4050	14.6	14.0	13.4
		20+20+20+60	1.67	1.67	1.67	5.00	-	-	4.4	10.0	11.8	1100	3210	4050	14.6	14.0	13.4
		20+20+20+71	1.53	1.53	1.53	5.42	-	-	4.4	10.0	11.8	1100	3200	4050	14.4	13.8	13.2
		20+20+25+25	2.00	2.00	2.50	2.50	-	-	4.4	9.0	11.6	1100	2600	3990	11.8	11.3	10.8
		20+20+25+35	2.00	2.00	2.50	3.50	-	-	4.4	10.0	11.8	1100	3220	4050	14.7	14.0	13.4
		20+20+25+50	1.74	1.74	2.17	4.35	-	-	4.4	10.0	11.8	1100	3210	4050	14.6	14.0	13.4

MULTI-SPLIT SYSTEM

Indoor unit combination			Cooling capacity (kW)									Power consumption(W)			Standard current(A)		
			Room cooling capacity						Total capacity			Min.	Standard	Max.	220V	230V	240V
			A	B	C	D	E	F	Min.	Standard	Max.						
Cooling operation	4 room	20+20+25+60	1.60	1.60	2.00	4.80	-	-	4.4	10.0	11.8	1100	3210	4050	14.6	14.0	13.4
		20+20+25+71	1.47	1.47	1.84	5.22	-	-	4.4	10.0	11.8	1100	3200	4050	14.6	13.9	13.3
		20+20+35+35	1.82	1.82	3.18	3.18	-	-	4.4	10.0	11.8	1100	3210	4050	14.6	14.0	13.4
		20+20+35+50	1.60	1.60	2.80	4.00	-	-	4.4	10.0	11.8	1100	3210	4050	14.6	14.0	13.4
		20+20+35+60	1.48	1.48	2.59	4.44	-	-	4.4	10.0	11.8	1100	3200	4050	14.6	13.9	13.3
		20+20+35+71	1.37	1.37	2.40	4.86	-	-	4.4	10.0	11.8	1100	3190	4050	14.5	13.9	13.3
		20+20+50+50	1.43	1.43	3.57	3.57	-	-	4.4	10.0	11.8	1100	3190	4050	14.5	13.9	13.3
		20+20+50+60	1.33	1.33	3.33	4.00	-	-	4.4	10.0	11.8	1100	3190	4050	14.5	13.9	13.3
		20+20+60+60	1.25	1.25	3.75	3.75	-	-	4.4	10.0	11.8	1100	3180	4050	14.5	13.8	13.3
		20+25+25+25	2.00	2.50	2.50	2.50	-	-	4.4	9.5	11.8	1100	2900	4050	13.2	12.6	12.1
		20+25+25+35	1.90	2.38	2.38	3.33	-	-	4.4	10.0	11.8	1100	3220	4050	14.7	14.0	13.4
		20+25+25+50	1.67	2.08	2.08	4.17	-	-	4.4	10.0	11.8	1100	3210	4050	14.6	14.0	13.4
		20+25+25+60	1.54	1.92	1.92	4.62	-	-	4.4	10.0	11.8	1100	3200	4050	14.6	13.9	13.3
		21+26+26+71	1.46	1.81	1.81	4.93	-	-	4.4	10.0	11.8	1100	3190	4050	14.5	13.9	13.3
		20+25+35+35	1.74	2.17	3.04	3.04	-	-	4.4	10.0	11.8	1100	3210	4050	14.6	14.0	13.4
		20+25+35+50	1.54	1.92	2.69	3.85	-	-	4.4	10.0	11.8	1100	3200	4050	14.6	13.9	13.3
		20+25+35+60	1.43	1.79	2.50	4.29	-	-	4.4	10.0	11.8	1100	3190	4050	14.5	13.9	13.3
		20+25+35+71	1.32	1.66	2.32	4.70			4.4	10.0	11.8	1100	3190	4050	14.5	13.9	13.3
		20+25+50+50	1.38	1.72	3.45	3.45	-	-	4.4	10.0	11.8	1100	3190	4050	14.5	13.9	13.3
		20+25+50+60	1.29	1.61	3.23	3.87	-	-	4.4	10.0	11.8	1100	3190	4050	14.5	13.9	13.3
		20+35+35+35	1.60	2.80	2.80	2.80	-	-	4.4	10.0	11.8	1100	3210	4050	14.6	14.0	13.4
		20+35+35+50	1.43	2.50	2.50	3.57	-	-	4.4	10.0	11.8	1100	3190	4050	14.5	13.9	13.3
		20+35+35+60	1.33	2.33	2.33	4.00	-	-	4.4	10.0	11.8	1100	3190	4050	14.5	13.9	13.3
		20+35+50+50	1.29	2.26	3.23	3.23	-	-	4.4	10.0	11.8	1100	3190	4050	14.5	13.9	13.3
		25+25+25+25	2.50	2.50	2.50	2.50	-	-	4.4	10.0	11.8	1100	3220	4050	14.7	14.0	13.4
		25+25+25+35	2.27	2.27	2.27	3.18	-	-	4.4	10.0	11.8	1100	3210	4050	14.6	14.0	13.4
		25+25+25+50	2.00	2.00	2.00	4.00	-	-	4.4	10.0	11.8	1100	3210	4050	14.6	14.0	13.4
		25+25+25+60	1.85	1.85	1.85	4.44	-	-	4.4	10.0	11.8	1100	3200	4050	14.6	13.9	13.3
		25+25+25+71	1.71	1.71	1.71	4.86			4.4	10.0	11.8	1100	3190	4050	14.5	13.9	13.3
		25+25+35+35	2.08	2.08	2.92	2.92	-	-	4.4	10.0	11.8	1100	3210	4050	14.6	14.0	13.4
		25+25+35+50	1.85	1.85	2.59	3.70	-	-	4.4	10.0	11.8	1100	3200	4050	14.6	13.9	13.3
		25+25+35+60	1.72	1.72	2.41	4.14			4.4	10.0	11.8	1100	3190	4050	14.5	13.9	13.3
		25+25+35+71	1.60	1.60	2.24	4.55			4.4	10.0	11.8	1100	3190	4050	14.5	13.9	13.3
		25+25+50+50	1.67	1.67	3.33	3.33	-	-	4.4	10.0	11.8	1100	3190	4050	14.5	13.9	13.3
		25+25+50+60	1.56	1.56	3.13	3.75	-	-	4.4	10.0	11.8	1100	3180	4050	14.5	13.8	13.3
		25+35+35+35	1.92	2.69	2.69	2.69	-	-	4.4	10.0	11.8	1100	3200	4050	14.6	13.9	13.3
		25+35+35+50	1.72	2.41	2.41	3.45	-	-	4.4	10.0	11.8	1100	3190	4050	14.5	13.9	13.3
		25+35+35+60	1.61	2.26	2.26	3.87	-	-	4.4	10.0	11.8	1100	3190	4050	14.5	13.9	13.3
		25+35+50+50	1.56	2.19	3.13	3.13	-	-	4.4	10.0	11.8	1100	3180	4050	14.5	13.8	13.3
		35+35+35+35	2.50	2.50	2.50	2.50	-	-	4.4	10.0	11.8	1100	3190	4050	14.5	13.9	13.3
		35+35+35+50	2.26	2.26	2.26	3.23	-	-	4.4	10.0	11.8	1100	3190	4050	14.5	13.9	13.3
	5 room	20+20+20+20+20	2.00	2.00	2.00	2.00	2.00	-	5.1	10.0	11.8	1210	2950	4030	13.4	12.8	12.3
		20+20+20+20+25	1.90	1.90	1.90	1.90	2.38	-	5.1	10.0	11.8	1210	2950	4030	13.4	12.8	12.3
		20+20+20+20+35	1.74	1.74	1.74	1.74	3.04	-	5.1	10.0	11.8	1210	2950	4030	13.4	12.8	12.3
		20+20+20+20+50	1.54	1.54	1.54	1.54	3.85	-	5.1	10.0	11.8	1210	2940	4030	13.4	12.8	12.3
		20+20+20+20+60	1.43	1.43	1.43	1.43	4.29	-	5.1	10.0	11.8	1210	2930	4030	13.3	12.8	12.2
		20+20+20+20+71	1.32	1.32	1.32	1.32	4.70	-	5.1	10.0	11.8	1210	2930	4030	13.3	12.8	12.2
		20+20+20+25+25	1.82	1.82	1.82	2.27	2.27	-	5.1	10.0	11.8	1210	2950	4030	13.4	12.8	12.3
		20+20+20+25+35	1.67	1.67	1.67	2.08	2.92	-	5.1	10.0	11.8	1210	2940	4030	13.4	12.8	12.3
		20+20+20+25+50	1.48	1.48	1.48	1.85	3.70	-	5.1	10.0	11.8	1210	2940	4030	13.4	12.8	12.3
		20+20+20+25+60	1.38	1.38	1.38	1.72	4.14	-	5.1	10.0	11.8	1210	2930	4030	13.3	12.8	12.2
		20+20+20+25+71	1.28	1.28	1.28	1.60	4.55	-	5.1	10.0	11.8	1210	2930	4030	13.3	12.8	12.2
		20+20+20+35+35	1.54	1.54	1.54	2.69	2.69	-	5.1	10.0	11.8	1210	2940	4030	13.4	12.8	12.3
		20+20+20+35+50	1.38	1.38	1.38	2.41	3.45	-	5.1	10.0	11.8	1210	2930	4030	13.3	12.8	12.2
		20+20+20+35+60	1.29	1.29	1.29	2.26	3.87	-	5.1	10.0	11.8	1210	2930	4030	13.3	12.8	12.2
		20+20+20+50+50	1.25	1.25	1.25	3.13	3.13	-	5.1	10.0	11.8	1210	2930	4030	13.3	12.8	12.2
		20+20+25+25+25	1.74	1.74	2.17	2.17	2.17	-	5.1	10.0	11.8	1210	2950	4030	13.4	12.8	12.3
		20+20+25+25+35	1.60	1.60	2.00	2.00	2.80	-	5.1	10.0	11.8	1210	2940	4030	13.4	12.8	12.3
		20+20+25+25+50	1.43	1.43	1.79	1.79	3.57	-	5.1	10.0	11.8	1210	2930	4030	13.3	12.8	12.2
		20+20+25+25+60	1.33	1.33	1.67	1.67	4.00	-	5.1	10.0	11.8	1210	2930	4030	13.3	12.8	12.2
		20+20+25+35+35	1.48	1.48	1.85	2.59	2.59	-	5.1	10.0	11.8	1210	2940	4030	13.4	12.8	12.3
		20+20+25+35+50	1.33	1.33	1.67	2.33	3.33	-	5.1	10.0	11.8	1210	2930	4030	13.3	12.8	12.2
		20+20+25+35+60	1.25	1.25	1.56	2.19	3.75	-	5.1	10.0	11.8	1210	2930	4030	13.3	12.8	12.2
		20+20+35+35+35	1.38	1.38	2.41	2.41	2.41	-	5.1	10.0	11.8	1210	2930	4030	13.3	12.8	12.2
		20+20+35+35+50	1.25	1.25	2.19	2.19	3.13	-	5.1	10.0	11.8	1210	2930	4030	13.3	12.8	12.2
		20+25+25+25+25	1.67	2.08	2.08	2.08	2.08	-	5.1	10.0	11.8	1210	2940	4030	13.4	12.8	12.3
		20+25+25+25+35	1.54	1.92	1.92	1.92	2.69	-	5.1	10.0	11.8	1210	2940	4030	13.4	12.8	12.3
		20+25+25+25+50	1.38	1.72	1.72	1.72	3.45	-	5.1	10.0	11.8	1210	2930	4030	13.3	12.8	12.2
		20+25+25+25+60	1.29	1.61	1.61	1.61	3.87	-	5.1	10.0	11.8	1210	2930	4030	13.3	12.8	12.2
		20+25+25+35+35	1.43	1.79	1.79	2.50	2.50	-	5.1	10.0	11.8	1210	2930	4030	13.3	12.8	12.2
		20+25+25+35+50	1.29	1.61	1.61	2.26	3.23	-	5.1	10.0	11.8	1210	2930	4030	13.3	12.8	12.2
		20+25+35+35+35	1.33	1.67	2.33	2.33	2.33	-	5.1	10.0	11.8	1210	2930	4030	13.3	12.8	12.2
		20+35+35+35+35	1.25	2.19	2.19	2.19	2.19	-	5.1	10.0	11.8	1210	2930	4030	13.3	12.8	12.2
		25+25+25+25+25	2.00	2.00	2.00	2.00	2.00	-	5.1	10.0	11.8	1210	2940	4030	13.4	12.8	12.3
		25+25+25+25+35	1.85	1.85	1.85	1.85	2.59	-	5.1	10.0	11.8	1210	2940	4030	13.4	12.8	12.3
		25+25+25+25+50	1.67	1.67	1.67	1.67	3.33	-	5.1	10.0	11.8	1210	2930	4030	13.3	12.8	12.2
		25+25+25+25+60	1.56	1.56	1.56	1.56	3.75	-	5.1	10.0	11.8	1210	2930	4030	13.3	12.8	12.2
		25+25+25+35+35	1.72	1.72	1.72	2.41	2.41	-	5.1	10.0	11.8	1210	2930	4030	13.3	12.8	12.2
		25+25+25+35+50	1.56	1.56	1.56	2.19	3.13	-	5.1	10.0	11.8	1210	2930	4030	13.3	12.8	12.2
		25+25+35+35+35	1.61	1.61	2.26	2.26	2.26	-	5.1	10.0	11.8	1210	2930	4030	13.3	12.8	12.2

SCM125ZM-S Table of Indoor unit combination with all indoor unit SRK-ZSX type only

Indoor unit combination			Heating capacity (kW)									Power consumption(W)			Standard current(A)		
			Room heating capacity						Total capacity								
			A	B	C	D	E	F	Min.	Standard	Max.	Min.	Standard	Max.	220V	230V	240V
Heating operation	1 room	20	3.0	-	-	-			1.5	3.0	3.7	700	1010	1330	4.6	4.4	4.3
		25	3.4	-	-	-			1.5	3.4	4.2	700	1150	1540	5.3	5.1	4.8
		35	4.5	-	-	-			1.5	4.5	5.0	700	1540	1840	7.1	6.8	6.5
		50	5.8	-	-	-			1.5	5.8	6.5	700	2000	2410	9.2	8.8	8.4
		60	6.8	-	-	-			1.5	6.8	7.5	700	2360	2760	10.8	10.4	9.9
	2 room	20+20	3.00	3.00	-	-	-	-	2.1	6.0	7.4	750	1510	1460	6.9	6.6	6.4
		20+25	2.84	3.56	-	-	-	-	2.1	6.4	7.9	750	1630	2210	7.5	7.2	6.9
		20+35	2.73	4.77	-	-	-	-	2.1	7.5	8.7	750	1950	2520	9.0	8.6	8.2
		20+50	2.51	6.29	-	-	-	-	2.1	8.8	10.2	750	2380	3220	10.9	10.5	10.0
		20+60	2.45	7.35	-	-	-	-	2.1	9.8	11.2	750	2780	3620	12.8	12.2	11.7
		25+25	3.40	3.40	-	-	-	-	2.1	6.8	8.4	750	1740	2420	8.0	7.6	7.3
		25+35	3.29	4.61	-	-	-	-	2.1	7.9	9.2	750	2100	2820	9.6	9.2	8.8
		25+50	3.07	6.13	-	-	-	-	2.1	9.2	10.7	750	2580	3610	11.8	11.3	10.9
		25+60	3.00	7.20	-	-	-	-	2.1	10.2	11.7	750	2980	3790	13.7	13.1	12.5
		35+35	4.50	4.50	-	-	-	-	2.1	9.0	10.0	750	2470	3210	11.3	10.8	10.4
		35+50	4.24	6.06	-	-	-	-	2.1	10.3	11.5	750	2980	3710	13.7	13.1	12.5
		35+60	4.16	7.14	-	-	-	-	2.1	11.3	12.5	750	3350	4320	15.4	14.7	14.1
		50+50	5.80	5.80	-	-	-	-	2.1	11.6	13.0	750	3590	4620	16.5	15.8	15.1
		50+60	5.73	6.87	-	-	-	-	2.1	12.6	14.0	750	4010	5230	18.4	17.6	16.9
		60+60	6.75	6.75	-	-	-	-	2.1	13.5	14.0	750	4450	5230	20.4	19.5	18.7
	3 room	20+20+20	3.00	3.00	3.00	-	-	-	3.2	9.0	11.1	780	2230	3350	10.2	9.8	9.4
		20+20+25	2.89	2.89	3.62	-	-	-	3.2	9.4	11.6	780	2350	3550	10.8	10.3	9.9
		20+20+35	2.80	2.80	4.90	-	-	-	3.2	10.5	12.4	780	2710	3820	12.4	11.9	11.4
		20+20+50	2.62	2.62	6.56	-	-	-	3.2	11.8	13.9	780	3210	4290	14.7	14.1	13.5
		20+20+60	2.56	2.56	7.68	-	-	-	3.2	12.8	14.0	780	3620	4350	16.6	15.9	15.2
		20+25+25	2.80	3.50	3.50	-	-	-	3.2	9.8	12.1	780	2510	3720	11.5	11.0	10.6
		20+25+35	2.73	3.41	4.77	-	-	-	3.2	10.9	12.9	780	2910	3990	13.4	12.8	12.2
		20+25+50	2.57	3.21	6.42	-	-	-	3.2	12.2	14.0	780	3410	4350	15.7	15.0	14.4
		20+25+60	2.51	3.14	7.54	-	-	-	3.2	13.2	14.0	780	3910	4350	18.0	17.2	16.5
		20+35+35	2.67	4.67	4.67	-	-	-	3.2	12.0	13.7	780	3390	4220	15.6	14.9	14.3
		20+35+50	2.53	4.43	6.33	-	-	-	3.2	13.3	14.0	780	3900	4350	17.9	17.1	16.4
		20+35+60	2.35	4.11	7.04	-	-	-	3.2	13.5	14.0	780	4050	4350	18.6	17.8	17.0
		20+50+50	2.25	5.63	5.63	-	-	-	3.2	13.5	14.0	780	4050	4350	18.6	17.8	17.0
		20+50+60	2.08	5.19	6.23	-	-	-	3.2	13.5	14.0	780	4050	4350	18.6	17.8	17.0
		20+60+60	1.93	5.79	5.79	-	-	-	3.2	13.5	14.0	780	4050	4350	18.6	17.8	17.0
		25+25+25	3.40	3.40	3.40	-	-	-	3.2	10.2	12.6	780	2710	3880	12.4	11.9	11.4
		25+25+35	3.32	3.32	4.65	-	-	-	3.2	11.3	13.4	780	3110	4120	14.3	13.7	13.1
		25+25+50	3.15	3.15	6.30	-	-	-	3.2	12.6	14.0	780	3620	4350	16.6	15.9	15.2
		25+25+60	3.07	3.07	7.36	-	-	-	3.2	13.5	14.0	780	4050	4350	18.6	17.8	17.0
		25+35+35	3.26	4.57	4.57	-	-	-	3.2	12.4	14.0	780	3710	4350	17.0	16.3	15.6
		25+35+50	3.07	4.30	6.14	-	-	-	3.2	13.5	14.0	780	4060	4350	18.6	17.8	17.1
		25+35+60	2.81	3.94	6.75	-	-	-	3.2	13.5	14.0	780	4060	4350	18.6	17.8	17.1
		25+50+50	2.70	5.40	5.40	-	-	-	3.2	13.5	14.0	780	4050	4350	18.6	17.8	17.0
		25+50+60	2.50	5.00	6.00	-	-	-	3.2	13.5	14.0	780	4050	4350	18.6	17.8	17.0
		25+60+60	2.33	5.59	5.59	-	-	-	3.2	13.5	14.0	780	4050	4350	18.6	17.8	17.0
		35+35+35	4.50	4.50	4.50	-	-	-	3.2	13.5	14.0	780	4060	4350	18.6	17.8	17.1
		35+35+50	3.94	3.94	5.63	-	-	-	3.2	13.5	14.0	780	4060	4350	18.6	17.8	17.1
		35+35+60	3.63	3.63	6.23	-	-	-	3.2	13.5	14.0	780	4050	4350	18.6	17.8	17.0
		35+50+50	3.50	5.00	5.00	-	-	-	3.2	13.5	14.0	780	4050	4350	18.6	17.8	17.0
		35+50+60	3.26	4.66	5.59	-	-	-	3.2	13.5	14.0	780	4050	4350	18.6	17.8	17.0
		35+60+60	3.05	5.23	5.23	-	-	-	3.2	13.5	14.0	780	4050	4350	18.6	17.8	17.0
		50+50+50	4.50	4.50	4.50	-	-	-	3.2	13.5	14.0	780	4040	4350	18.5	17.7	17.0
		50+50+60	4.22	4.22	5.06	-	-	-	3.2	13.5	14.0	780	4040	4350	18.5	17.7	17.0
		50+60+60	3.97	4.76	4.76	-	-	-	3.2	13.5	14.0	780	4040	4350	18.5	17.7	17.0
		60+60+60	4.50	4.50	4.50	-	-	-	3.2	13.5	14.0	780	4030	4350	18.5	17.7	17.0
	4 room	20+20+20+20	3.00	3.00	3.00	3.00	-	-	3.6	12.0	14.0	950	3210	3920	14.6	14.0	13.4
		20+20+20+25	2.92	2.92	2.92	3.65	-	-	3.6	12.4	14.0	950	3390	3920	15.4	14.8	14.1
		20+20+20+35	2.84	2.84	2.84	4.97	-	-	3.6	13.5	14.0	950	3700	3920	16.8	16.1	15.4
		20+20+20+50	2.45	2.45	2.45	6.14	-	-	3.6	13.5	14.0	950	3690	3920	16.8	16.1	15.4
		20+20+20+60	2.25	2.25	2.25	6.75	-	-	3.6	13.5	14.0	950	3690	3920	16.8	16.1	15.4
		20+20+25+25	2.84	2.84	3.56	3.56	-	-	3.6	12.8	14.0	950	3440	3920	15.7	15.0	14.3
		20+20+25+35	2.70	2.70	3.38	4.73	-	-	3.6	13.5	14.0	950	3700	3920	16.8	16.1	15.4
		20+20+25+50	2.35	2.35	2.93	5.87	-	-	3.6	13.5	14.0	950	3690	3920	16.8	16.1	15.4
		20+20+25+60	2.16	2.16	2.70	6.48	-	-	3.6	13.5	14.0	950	3680	3920	16.7	16.0	15.3
		20+20+35+35	2.45	2.45	4.30	4.30	-	-	3.6	13.5	14.0	950	3690	3920	16.8	16.1	15.4
		20+20+35+50	2.16	2.16	3.78	5.40	-	-	3.6	13.5	14.0	950	3680	3920	16.7	16.0	15.3
		20+20+35+60	2.00	2.00	3.50	6.00	-	-	3.6	13.5	14.0	950	3680	3920	16.7	16.0	15.3
		20+20+50+50	1.93	1.93	4.82	4.82	-	-	3.6	13.5	14.0	950	3670	3920	16.7	16.0	15.3
		20+20+50+60	1.80	1.80	4.50	5.40	-	-	3.6	13.5	14.0	950	3670	3920	16.7	16.0	15.3
		20+20+60+60	1.69	1.69	5.06	5.06	-	-	3.6	13.5	14.0	950	3670	3920	16.7	16.0	15.3
		20+25+25+25	2.78	3.47	3.47	3.47	-	-	3.6	13.2	14.0	950	3550	3920	16.2	15.5	14.8
		20+25+25+35	2.57	3.21	3.21	4.50	-	-	3.6	13.5	14.0	950	3700	3920	16.8	16.1	15.4
		20+25+25+50	2.25	2.81	2.81	5.63	-	-	3.6	13.5	14.0	950	3690	3920	16.8	16.1	15.4
		20+25+25+60	2.08	2.60	2.60	6.23	-	-	3.6	13.5	14.0	950	3680	3920	16.7	16.0	15.3
		20+25+35+35	2.35	2.93	4.11	4.11	-	-	3.6	13.5	14.0	950	3690	3920	16.8	16.1	15.4
		20+25+35+50	2.08	2.60	3.63	5.19	-	-	3.6	13.5	14.0	950	3680	3920	16.7	16.0	15.3
		20+25+35+60	1.93	2.41	3.38	5.79	-	-	3.6	13.5	14.0	950	3670	3920	16.7	16.0	15.3
		20+25+50+50	1.86	2.33	4.66	4.66	-	-	3.6	13.5	14.0	950	3670	3920	16.7	16.0	15.3
		20+25+50+60	1.74	2.18	4.35	5.23	-	-	3.6	13.5	14.0	950	3670	3920	16.7	16.0	15.3
		20+25+60+60	1.64	2.05	4.91	4.91	-	-	3.6	13.5	14.0	950	3660	3920	16.7	15.9	15.3
		20+35+35+35	2.16	3.78	3.78	3.78	-	-	3.6	13.5	14.0	950	3680	3920	16.7	16.0	15.3
		20+35+35+50	1.93	3.38	3.38	4.82	-	-	3.6	13.5	14.0	950	3670	3920	16.7	16.0	15.3
		20+35+35+60	1.80	3.15	3.15	5.40	-	-	3.6	13.5	14.0	950	3670	3920	16.7	16.0	15.3
		20+35+50+50	1.74	3.05	4.35	4.35	-	-	3.6	13.5	14.0	950	3670	3920	16.7	16.0	15.3
		20+35+50+60	1.64	2.86	4.09	4.91	-	-	3.6	13.5	14.0	950	3660	3920	16.7	15.9	15.3
		20+35+60+60	1.54	2.70	4.63	4.63	-	-	3.6	13.5	14.0	950	3660	3920	16.7	15.9	15.3
		20+50+50+50	1.59	3.97	3.97	3.97	-	-	3.6	13.5	14.0	950	3660	3920	16.7	15.9	15.3
		20+50+50+60	1.50	3.75	3.75	4.50	-	-	3.6	13.5	14.0	950	3660	3920	16.7	15.9	15.3
		20+50+60+60	1.42	3.55	4.26	4.26	-	-	3.6	13.5	14.0	950	3650	3920	16.6	15.9	15.2
		25+25+25+25	3.38	3.38	3.38	3.38	-	-	3.6	13.5	14.0	950	3700	3920	16.8	16.1	15.4
		25+25+25+35	3.07	3.07	3.07	4.30	-	-	3.6	13.5	14.0	950	3690	3920	16.8	16.1	15.4
		25+25+25+50	2.70	2.70	2.70	5.40	-	-	3.6	13.5	14.0	950	3680	3920	16.7	16.0	15.3
		25+25+25+60	2.50	2.50	2.50	6.00	-	-	3.6	13.5	14.0	950	3680	3920	16.7	16.0	15.3
		25+25+35+35	2.81	2.81	3.94	3.94	-	-	3.6	13.5	14.0	950	3690	3920	16.8	16.1	15.4

MULTI-SPLIT SYSTEM

Indoor unit combination			Heating capacity (kW)									Power consumption(W)			Standard current(A)		
			Room heating capacity						Total capacity			Min.	Standard	Max.	220V	230V	240V
			A	B	C	D	E	F	Min.	Standard	Max.						
Heating operation	4 room	25+25+35+50	2.50	2.50	3.50	5.00	-	-	3.6	13.5	14.0	950	3680	3920	16.7	16.0	15.3
		25+25+35+60	2.33	2.33	3.26	5.59	-	-	3.6	13.5	14.0	950	3670	3920	16.7	16.0	15.3
		25+25+50+50	2.25	2.25	4.50	4.50	-	-	3.6	13.5	14.0	950	3670	3920	16.7	16.0	15.3
		25+25+50+60	2.11	2.11	4.22	5.06	-	-	3.6	13.5	14.0	950	3670	3920	16.7	16.0	15.3
		25+25+60+60	1.99	1.99	4.76	4.76	-	-	3.6	13.5	14.0	950	3660	3920	16.7	15.9	15.3
		25+35+35+35	2.60	3.63	3.63	3.63	-	-	3.6	13.5	14.0	950	3680	3920	16.7	16.0	15.3
		25+35+35+50	2.33	3.26	3.26	4.66	-	-	3.6	13.5	14.0	950	3670	3920	16.7	16.0	15.3
		25+35+35+60	2.18	3.05	3.05	5.23	-	-	3.6	13.5	14.0	950	3670	3920	16.7	16.0	15.3
		25+35+50+50	2.11	2.95	4.22	4.22	-	-	3.6	13.5	14.0	950	3670	3920	16.7	16.0	15.3
		25+35+50+60	1.99	2.78	3.97	4.76	-	-	3.6	13.5	14.0	950	3660	3920	16.7	15.9	15.3
		25+35+60+60	1.88	2.63	4.50	4.50	-	-	3.6	13.5	14.0	950	3660	3920	16.7	15.9	15.3
		25+50+50+50	1.93	3.86	3.86	3.86	-	-	3.6	13.5	14.0	950	3660	3920	16.7	15.9	15.3
		25+50+50+60	1.82	3.65	3.65	4.38	-	-	3.6	13.5	14.0	950	3650	3920	16.6	15.9	15.2
		25+50+60+60	1.73	3.46	4.15	4.15	-	-	3.6	13.5	14.0	950	3650	3920	16.6	15.9	15.2
		35+35+35+35	3.38	3.38	3.38	3.38	-	-	3.6	13.5	14.0	950	3670	3920	16.7	16.0	15.3
		35+35+35+50	3.05	3.05	3.05	4.35	-	-	3.6	13.5	14.0	950	3670	3920	16.7	16.0	15.3
		35+35+35+60	2.86	2.86	2.86	4.91	-	-	3.6	13.5	14.0	950	3660	3920	16.7	15.9	15.3
		35+35+50+50	2.78	2.78	3.97	3.97	-	-	3.6	13.5	14.0	950	3660	3920	16.7	15.9	15.3
		35+35+50+60	2.63	2.63	3.75	4.50	-	-	3.6	13.5	14.0	950	3660	3920	16.7	15.9	15.3
		35+35+60+60	2.49	2.49	4.26	4.26	-	-	3.6	13.5	14.0	950	3650	3920	16.6	15.9	15.2
		35+50+50+50	2.55	3.65	3.65	3.65	-	-	3.6	13.5	14.0	950	3650	3920	16.6	15.9	15.2
		35+50+50+60	2.42	3.46	3.46	4.15	-	-	3.6	13.5	14.0	950	3650	3920	16.6	15.9	15.2
	5 room	20+20+20+20+20	2.70	2.70	2.70	2.70	2.70	-	4.0	13.5	14.0	1050	3380	3470	15.4	14.7	14.1
		20+20+20+20+25	2.57	2.57	2.57	2.57	3.21	-	4.0	13.5	14.0	1050	3380	3470	15.4	14.7	14.1
		20+20+20+20+35	2.35	2.35	2.35	2.35	4.11	-	4.0	13.5	14.0	1050	3370	3470	15.3	14.7	14.1
		20+20+20+20+50	2.08	2.08	2.08	2.08	5.19	-	4.0	13.5	14.0	1050	3360	3470	15.3	14.6	14.0
		20+20+20+20+60	1.93	1.93	1.93	1.93	5.79	-	4.0	13.5	14.0	1050	3360	3470	15.3	14.6	14.0
		20+20+20+25+25	2.45	2.45	2.45	3.07	3.07	-	4.0	13.5	14.0	1050	3380	3470	15.4	14.7	14.1
		20+20+20+25+35	2.25	2.25	2.25	2.81	3.94	-	4.0	13.5	14.0	1050	3370	3470	15.3	14.7	14.1
		20+20+20+25+50	2.00	2.00	2.00	2.50	5.00	-	4.0	13.5	14.0	1050	3360	3470	15.3	14.6	14.0
		20+20+20+25+60	1.86	1.86	1.86	2.33	5.59	-	4.0	13.5	14.0	1050	3350	3470	15.2	14.6	14.0
		20+20+20+35+35	2.08	2.08	2.08	3.63	3.63	-	4.0	13.5	14.0	1050	3360	3470	15.3	14.6	14.0
		20+20+20+35+50	1.86	1.86	1.86	3.26	4.66	-	4.0	13.5	14.0	1050	3350	3470	15.2	14.6	14.0
		20+20+20+35+60	1.74	1.74	1.74	3.05	5.23	-	4.0	13.5	14.0	1050	3350	3470	15.2	14.6	14.0
		20+20+20+50+50	1.69	1.69	1.69	4.22	4.22	-	4.0	13.5	14.0	1050	3340	3470	15.2	14.5	13.9
		20+20+20+50+60	1.59	1.59	1.59	3.97	4.76	-	4.0	13.5	14.0	1050	3340	3470	15.2	14.5	13.9
		20+20+20+60+60	1.50	1.50	1.50	4.50	4.50	-	4.0	13.5	14.0	1050	3330	3470	15.2	14.5	13.9
		20+20+25+25+25	2.35	2.35	2.93	2.93	2.93	-	4.0	13.5	14.0	1050	3370	3470	15.3	14.7	14.1
		20+20+25+25+35	2.16	2.16	2.70	2.70	3.78	-	4.0	13.5	14.0	1050	3370	3470	15.3	14.7	14.1
		20+20+25+25+50	1.93	1.93	2.41	2.41	4.82	-	4.0	13.5	14.0	1050	3360	3470	15.3	14.6	14.0
		20+20+25+25+60	1.80	1.80	2.25	2.25	5.40	-	4.0	13.5	14.0	1050	3350	3470	15.2	14.6	14.0
		20+20+25+35+35	2.00	2.00	2.50	3.50	3.50	-	4.0	13.5	14.0	1050	3360	3470	15.3	14.6	14.0
		20+20+25+35+50	1.80	1.80	2.25	3.15	4.50	-	4.0	13.5	14.0	1050	3350	3470	15.2	14.6	14.0
		20+20+25+35+60	1.69	1.69	2.11	2.95	5.06	-	4.0	13.5	14.0	1050	3340	3470	15.2	14.5	13.9
		20+20+25+50+50	1.64	1.64	2.05	4.09	4.09	-	4.0	13.5	14.0	1050	3340	3470	15.2	14.5	13.9
		20+20+25+50+60	1.54	1.54	1.93	3.86	4.63	-	4.0	13.5	14.0	1050	3340	3470	15.2	14.5	13.9
		20+20+25+60+60	1.46	1.46	1.82	4.38	4.38	-	4.0	13.5	14.0	1050	3330	3470	15.2	14.5	13.9
		20+20+35+35+35	1.86	1.86	3.26	3.26	3.26	-	4.0	13.5	14.0	1050	3350	3470	15.2	14.6	14.0
		20+20+35+35+50	1.69	1.69	2.95	2.95	4.22	-	4.0	13.5	14.0	1050	3340	3470	15.2	14.5	13.9
		20+20+35+35+60	1.59	1.59	2.78	2.78	4.76	-	4.0	13.5	14.0	1050	3340	3470	15.2	14.5	13.9
		20+20+35+50+50	1.54	1.54	2.70	3.86	3.86	-	4.0	13.5	14.0	1050	3340	3470	15.2	14.5	13.9
		20+20+35+50+60	1.46	1.46	2.55	3.65	4.38	-	4.0	13.5	14.0	1050	3330	3470	15.2	14.5	13.9
		20+20+35+60+60	1.38	1.38	2.42	4.15	4.15	-	4.0	13.5	14.0	1050	3320	3470	15.1	14.4	13.8
		20+20+50+50+50	1.42	1.42	3.55	3.55	3.55	-	4.0	13.5	14.0	1050	3320	3470	15.1	14.4	13.8
		20+25+25+25+25	2.25	2.81	2.81	2.81	2.81	-	4.0	13.5	14.0	1050	3370	3470	15.3	14.7	14.1
		20+25+25+25+35	2.08	2.60	2.60	2.60	3.63	-	4.0	13.5	14.0	1050	3360	3470	15.3	14.6	14.0
		20+25+25+25+50	1.86	2.33	2.33	2.33	4.66	-	4.0	13.5	14.0	1050	3350	3470	15.2	14.6	14.0
		20+25+25+25+60	1.74	2.18	2.18	2.18	5.23	-	4.0	13.5	14.0	1050	3350	3470	15.2	14.6	14.0
		20+25+25+35+35	1.93	2.41	2.41	3.38	3.38	-	4.0	13.5	14.0	1050	3360	3470	15.3	14.6	14.0
		20+25+25+35+50	1.74	2.18	2.18	3.05	4.35	-	4.0	13.5	14.0	1050	3350	3470	15.2	14.6	14.0
		20+25+25+35+60	1.64	2.05	2.05	2.86	4.91	-	4.0	13.5	14.0	1050	3340	3470	15.2	14.5	13.9
		20+25+25+50+50	1.59	1.99	1.99	3.97	3.97	-	4.0	13.5	14.0	1050	3340	3470	15.2	14.5	13.9
		20+25+25+50+60	1.50	1.88	1.88	3.75	4.50	-	4.0	13.5	14.0	1050	3330	3470	15.2	14.5	13.9
		20+25+25+60+60	1.42	1.78	1.78	4.26	4.26	-	4.0	13.5	14.0	1050	3320	3470	15.1	14.4	13.8
		20+25+35+35+35	1.80	2.25	3.15	3.15	3.15	-	4.0	13.5	14.0	1050	3350	3470	15.2	14.6	14.0
		20+25+35+35+50	1.64	2.05	2.86	2.86	4.09	-	4.0	13.5	14.0	1050	3340	3470	15.2	14.5	13.9
		20+25+35+35+60	1.54	1.93	2.70	2.70	4.63	-	4.0	13.5	14.0	1050	3340	3470	15.2	14.5	13.9
		20+25+35+50+50	1.50	1.88	2.63	3.75	3.75	-	4.0	13.5	14.0	1050	3330	3470	15.2	14.5	13.9
		20+25+35+50+60	1.42	1.78	2.49	3.55	4.26	-	4.0	13.5	14.0	1050	3320	3470	15.1	14.4	13.8
		20+25+50+50+50	1.38	1.73	3.46	3.46	3.46	-	4.0	13.5	14.0	1050	3320	3470	15.1	14.4	13.8
		20+35+35+35+35	1.69	2.95	2.95	2.95	2.95	-	4.0	13.5	14.0	1050	3340	3470	15.2	14.5	13.9
		20+35+35+35+50	1.54	2.70	2.70	2.70	3.86	-	4.0	13.5	14.0	1050	3340	3470	15.2	14.5	13.9
		20+35+35+35+60	1.46	2.55	2.55	2.55	4.38	-	4.0	13.5	14.0	1050	3330	3470	15.2	14.5	13.9
		20+35+35+50+50	1.42	2.49	2.49	3.55	3.55	-	4.0	13.5	14.0	1050	3320	3470	15.1	14.4	13.8
		25+25+25+25+25	2.70	2.70	2.70	2.70	2.70	-	4.0	13.5	14.0	1050	3370	3470	15.3	14.7	14.1
		25+25+25+25+35	2.50	2.50	2.50	2.50	3.50	-	4.0	13.5	14.0	1050	3360	3470	15.3	14.6	14.0
		25+25+25+25+50	2.25	2.25	2.25	2.25	4.50	-	4.0	13.5	14.0	1050	3350	3470	15.2	14.6	14.0
		25+25+25+25+60	2.11	2.11	2.11	2.11	5.06	-	4.0	13.5	14.0	1050	3340	3470	15.2	14.5	13.9
		25+25+25+35+35	2.33	2.33	2.33	3.26	3.26	-	4.0	13.5	14.0	1050	3350	3470	15.2	14.6	14.0
		25+25+25+35+50	2.11	2.11	2.11	2.95	4.22	-	4.0	13.5	14.0	1050	3340	3470	15.2	14.5	13.9
		25+25+25+35+60	1.99	1.99	1.99	2.78	4.76	-	4.0	13.5	14.0	1050	3340	3470	15.2	14.5	13.9
		25+25+25+50+50	1.93	1.93	1.93	3.86	3.86	-	4.0	13.5	14.0	1050	3340	3470	15.2	14.5	13.9
		25+25+25+50+60	1.82	1.82	1.82	3.65	4.38	-	4.0	13.5	14.0	1050	3330	3470	15.2	14.5	13.9
		25+25+25+60+60	1.73	1.73	1.73	4.15	4.15	-	4.0	13.5	14.0	1050	3320	3470	15.1	14.4	13.8
		25+25+35+35+35	2.18	2.18	3.05	3.05	3.05	-	4.0	13.5	14.0	1050	3350	3470	15.2	14.6	14.0
		25+25+35+35+50	1.99	1.99	2.78	2.78	3.97	-	4.0	13.5	14.0	1050	3340	3470	15.2	14.5	13.9
		25+25+35+35+60	1.88	1.88	2.63	2.63	4.50	-	4.0	13.5	14.0	1050	3330	3470	15.2	14.5	13.9
		25+25+35+50+50	1.82	1.82	2.55	3.65	3.65	-	4.0	13.5	14.0	1050	3330	3470	15.2	14.5	13.9
		25+25+35+50+60	1.73	1.73	2.42	3.46	4.15	-	4.0	13.5	14.0	1050	3320	3470	15.1	14.4	13.8
		25+35+35+35+35	2.05	2.86	2.86	2.86	2.86	-	4.0	13.5	14.0	1050	3340	3470	15.2	14.5	13.9
		25+35+35+35+50	1.88	2.63	2.63	2.63	3.75	-	4.0	13.5	14.0	1050	3330	3470	15.2	14.5	13.9
		25+35+35+35+60	1.78	2.49	2.49	2.49	4.26	-	4.0	13.5	14.0	1050	3320	3470	15.1	14.4	13.8
		25+35+35+50+50	1.73	2.42	2.42	3.46	3.46	-	4.0	13.5	14.0	1050	3320	3470	15.1	14.4	13.8
		35+35+35+35+35	2.70	2.70	2.70	2.70	2.70	-	4.0	13.5	14.0	1050	3340	3470	15.2	14.5	13.9
		35+35+35+35+50	2.49	2.49	2.49	2.49	3.55	-	4.0	13.5	14.0	1050	3320	3470	15.1	14.4	13.8

Indoor unit combination			Heating capacity (kW)									Power consumption(W)			Standard current(A)		
			Room heating capacity						Total capacity			Min.	Standard	Max.	220V	230V	240V
			A	B	C	D	E	F	Min.	Standard	Max.						
Heating operation	6 room	20+20+20+20+20+20	2.25	2.25	2.25	2.25	2.25	2.25	4.5	13.5	14.0	1150	3260	3420	14.8	14.2	13.6
		20+20+20+20+20+25	2.16	2.16	2.16	2.16	2.16	2.70	4.5	13.5	14.0	1150	3250	3420	14.8	14.1	13.6
		20+20+20+20+20+35	2.00	2.00	2.00	2.00	2.00	3.50	4.5	13.5	14.0	1150	3250	3420	14.8	14.1	13.6
		20+20+20+20+20+50	1.80	1.80	1.80	1.80	1.80	4.50	4.5	13.5	14.0	1150	3250	3420	14.8	14.1	13.6
		20+20+20+20+20+60	1.69	1.69	1.69	1.69	1.69	5.06	4.5	13.5	14.0	1150	3240	3420	14.7	14.1	13.5
		20+20+20+20+25+25	2.08	2.08	2.08	2.08	2.60	2.60	4.5	13.5	14.0	1150	3250	3420	14.8	14.1	13.6
		20+20+20+20+25+35	1.93	1.93	1.93	1.93	2.41	3.38	4.5	13.5	14.0	1150	3250	3420	14.8	14.1	13.6
		20+20+20+20+25+50	1.74	1.74	1.74	1.74	2.18	4.35	4.5	13.5	14.0	1150	3240	3420	14.7	14.1	13.5
		20+20+20+20+25+60	1.64	1.64	1.64	1.64	2.05	4.91	4.5	13.5	14.0	1150	3240	3420	14.7	14.1	13.5
		20+20+20+20+35+35	1.80	1.80	1.80	1.80	3.15	3.15	4.5	13.5	14.0	1150	3250	3420	14.8	14.1	13.6
		20+20+20+20+35+50	1.64	1.64	1.64	1.64	2.86	4.09	4.5	13.5	14.0	1150	3240	3420	14.7	14.1	13.5
		20+20+20+20+35+60	1.54	1.54	1.54	1.54	2.70	4.63	4.5	13.5	14.0	1150	3230	3420	14.7	14.1	13.5
		20+20+20+20+50+50	1.50	1.50	1.50	1.50	3.75	3.75	4.5	13.5	14.0	1150	3230	3420	14.7	14.1	13.5
		20+20+20+20+50+60	1.42	1.42	1.42	1.42	3.55	4.26	4.5	13.5	14.0	1150	3230	3420	14.7	14.1	13.5
		20+20+20+25+25+25	2.00	2.00	2.00	2.50	2.50	2.50	4.5	13.5	14.0	1150	3250	3420	14.8	14.1	13.6
		20+20+20+25+25+35	1.86	1.86	1.86	2.33	2.33	3.26	4.5	13.5	14.0	1150	3250	3420	14.8	14.1	13.6
		20+20+20+25+25+50	1.69	1.69	1.69	2.11	2.11	4.22	4.5	13.5	14.0	1150	3240	3420	14.7	14.1	13.5
		20+20+20+25+25+60	1.59	1.59	1.59	1.99	1.99	4.76	4.5	13.5	14.0	1150	3240	3420	14.7	14.1	13.5
		20+20+20+25+35+35	1.74	1.74	1.74	2.18	3.05	3.05	4.5	13.5	14.0	1150	3240	3420	14.7	14.1	13.5
		20+20+20+25+35+50	1.59	1.59	1.59	1.99	2.78	3.97	4.5	13.5	14.0	1150	3240	3420	14.7	14.1	13.5
		20+20+20+25+35+60	1.50	1.50	1.50	1.88	2.63	4.50	4.5	13.5	14.0	1150	3230	3420	14.7	14.1	13.5
		20+20+20+25+50+50	1.46	1.46	1.46	1.82	3.65	3.65	4.5	13.5	14.0	1150	3230	3420	14.7	14.1	13.5
		20+20+20+25+50+60	1.38	1.38	1.38	1.73	3.46	4.15	4.5	13.5	14.0	1150	3220	3420	14.7	14.0	13.4
		20+20+20+35+35+35	1.64	1.64	1.64	2.86	2.86	2.86	4.5	13.5	14.0	1150	3240	3420	14.7	14.1	13.5
		20+20+20+35+35+50	1.50	1.50	1.50	2.63	2.63	3.75	4.5	13.5	14.0	1150	3230	3420	14.7	14.1	13.5
		20+20+20+35+35+60	1.42	1.42	1.42	2.49	2.49	4.26	4.5	13.5	14.0	1150	3230	3420	14.7	14.1	13.5
		20+20+20+35+50+50	1.38	1.38	1.38	2.42	3.46	3.46	4.5	13.5	14.0	1150	3220	3420	14.7	14.0	13.4
		20+20+25+25+25+25	1.93	1.93	2.41	2.41	2.41	2.41	4.5	13.5	14.0	1150	3250	3420	14.8	14.1	13.6
		20+20+25+25+25+35	1.80	1.80	2.25	2.25	2.25	3.15	4.5	13.5	14.0	1150	3250	3420	14.8	14.1	13.6
		20+20+25+25+25+50	1.64	1.64	2.05	2.05	2.05	4.09	4.5	13.5	14.0	1150	3240	3420	14.7	14.1	13.5
		20+20+25+25+25+60	1.54	1.54	1.93	1.93	1.93	4.63	4.5	13.5	14.0	1150	3230	3420	14.7	14.1	13.5
		20+20+25+25+35+35	1.69	1.69	2.11	2.11	2.95	2.95	4.5	13.5	14.0	1150	3240	3420	14.7	14.1	13.5
		20+20+25+25+35+50	1.54	1.54	1.93	1.93	2.70	3.86	4.5	13.5	14.0	1150	3230	3420	14.7	14.1	13.5
		20+20+25+25+35+60	1.46	1.46	1.82	1.82	2.55	4.38	4.5	13.5	14.0	1150	3230	3420	14.7	14.1	13.5
		20+20+25+25+50+50	1.42	1.42	1.78	1.78	3.55	3.55	4.5	13.5	14.0	1150	3230	3420	14.7	14.1	13.5
		20+20+25+35+35+35	1.59	1.59	1.99	2.78	2.78	2.78	4.5	13.5	14.0	1150	3240	3420	14.7	14.1	13.5
		20+20+25+35+35+50	1.46	1.46	1.82	2.55	2.55	3.65	4.5	13.5	14.0	1150	3230	3420	14.7	14.1	13.5
		20+20+25+35+35+60	1.38	1.38	1.73	2.42	2.42	4.15	4.5	13.5	14.0	1150	3220	3420	14.7	14.0	13.4
		20+20+35+35+35+35	1.50	1.50	2.63	2.63	2.63	2.63	4.5	13.5	14.0	1150	3230	3420	14.7	14.1	13.5
		20+20+35+35+35+50	1.38	1.38	2.42	2.42	2.42	3.46	4.5	13.5	14.0	1150	3220	3420	14.7	14.0	13.4
		20+25+25+25+25+25	1.86	2.33	2.33	2.33	2.33	2.33	4.5	13.5	14.0	1150	3250	3420	14.8	14.1	13.6
		20+25+25+25+25+35	1.74	2.18	2.18	2.18	2.18	3.05	4.5	13.5	14.0	1150	3240	3420	14.7	14.1	13.5
		20+25+25+25+25+50	1.59	1.99	1.99	1.99	1.99	3.97	4.5	13.5	14.0	1150	3240	3420	14.7	14.1	13.5
		20+25+25+25+25+60	1.50	1.88	1.88	1.88	1.88	4.50	4.5	13.5	14.0	1150	3230	3420	14.7	14.1	13.5
		20+25+25+25+35+35	1.64	2.05	2.05	2.05	2.86	2.86	4.5	13.5	14.0	1150	3240	3420	14.7	14.1	13.5
		20+25+25+25+35+50	1.50	1.88	1.88	1.88	2.63	3.75	4.5	13.5	14.0	1150	3230	3420	14.7	14.1	13.5
		20+25+25+25+35+60	1.42	1.78	1.78	1.78	2.49	4.26	4.5	13.5	14.0	1150	3230	3420	14.7	14.1	13.5
		20+25+25+25+50+50	1.38	1.73	1.73	1.73	3.46	3.46	4.5	13.5	14.0	1150	3220	3420	14.7	14.0	13.4
		20+25+25+35+35+35	1.54	1.93	1.93	2.70	2.70	2.70	4.5	13.5	14.0	1150	3230	3420	14.7	14.1	13.5
		20+25+25+35+35+50	1.42	1.78	1.78	2.49	2.49	3.55	4.5	13.5	14.0	1150	3230	3420	14.7	14.1	13.5
		20+25+35+35+35+35	1.46	1.82	2.55	2.55	2.55	2.55	4.5	13.5	14.0	1150	3230	3420	14.7	14.1	13.5
		20+35+35+35+35+35	1.38	2.42	2.42	2.42	2.42	2.42	4.5	13.5	14.0	1150	3220	3420	14.7	14.0	13.4
		25+25+25+25+25+25	2.25	2.25	2.25	2.25	2.25	2.25	4.5	13.5	14.0	1150	3240	3420	14.7	14.1	13.5
		25+25+25+25+25+35	2.11	2.11	2.11	2.11	2.11	2.95	4.5	13.5	14.0	1150	3240	3420	14.7	14.1	13.5
		25+25+25+25+25+50	1.93	1.93	1.93	1.93	1.93	3.86	4.5	13.5	14.0	1150	3230	3420	14.7	14.1	13.5
		25+25+25+25+25+60	1.82	1.82	1.82	1.82	1.82	4.38	4.5	13.5	14.0	1150	3230	3420	14.7	14.1	13.5
		25+25+25+25+35+35	1.99	1.99	1.99	1.99	2.78	2.78	4.5	13.5	14.0	1150	3240	3420	14.7	14.1	13.5
		25+25+25+25+35+50	1.82	1.82	1.82	1.82	2.55	3.65	4.5	13.5	14.0	1150	3230	3420	14.7	14.1	13.5
		25+25+25+25+35+60	1.73	1.73	1.73	1.73	2.42	4.15	4.5	13.5	14.0	1150	3220	3420	14.7	14.0	13.4
		25+25+25+35+35+35	1.88	1.88	1.88	2.63	2.63	2.63	4.5	13.5	14.0	1150	3230	3420	14.7	14.1	13.5
		25+25+25+35+35+50	1.73	1.73	1.73	2.42	2.42	3.46	4.5	13.5	14.0	1150	3220	3420	14.7	14.0	13.4
		25+25+35+35+35+35	1.78	1.78	2.49	2.49	2.49	2.49	4.5	13.5	14.0	1150	3230	3420	14.7	14.1	13.5

Indoor unit combination			Cooling capacity (kW)									Power consumption(W)			Standard current(A)		
			Room cooling capacity						Total capacity			Min.	Standard	Max.	220V	230V	240V
			A	B	C	D	E	F	Min.	Standard	Max.						
Cooling operation	1 room	20	2.0	-	-	-	-	-	1.8	2.0	2.8	650	750	1100	3.4	3.3	3.2
		25	2.5	-	-	-	-	-	1.8	2.5	3.4	650	950	1350	4.4	4.2	4.0
		35	3.5	-	-	-	-	-	1.8	3.5	3.9	650	1400	1600	6.4	6.1	5.9
		50	5.0	-	-	-	-	-	1.8	5.0	6.1	650	2000	2500	9.2	8.8	8.4
		60	6.0	-	-	-	-	-	1.8	6.0	7.0	650	2450	3000	11.2	10.8	10.3
	2 room	20+20	2.00	2.00	-	-	-	-	3.0	4.0	5.6	740	910	1460	4.2	4.0	3.8
		20+25	2.00	2.50	-	-	-	-	3.0	4.5	6.2	740	1050	1820	4.8	4.6	4.4
		20+35	2.00	3.50	-	-	-	-	3.0	5.5	6.7	740	1430	2020	6.6	6.3	6.0
		20+50	2.00	5.00	-	-	-	-	3.0	7.0	8.9	740	2180	2820	10.0	9.6	9.2
		20+60	2.00	6.00	-	-	-	-	3.0	8.0	9.8	740	2530	3360	11.6	11.1	10.6
		25+25	2.50	2.50	-	-	-	-	3.0	5.0	6.8	740	1350	2200	6.2	5.9	5.7
		25+35	2.50	3.50	-	-	-	-	3.0	6.0	7.3	740	1720	2320	7.9	7.6	7.2
		25+50	2.50	5.00	-	-	-	-	3.0	7.5	9.5	740	2350	3220	10.8	10.3	9.9
		25+60	2.50	6.00	-	-	-	-	3.0	8.5	9.8	740	2680	3360	12.3	11.8	11.3
		35+35	3.50	3.50	-	-	-	-	3.0	7.0	7.8	740	2180	2820	10.0	9.6	9.2
		35+50	3.50	5.00	-	-	-	-	3.0	8.5	10.0	740	2680	3620	12.3	11.8	11.3
		35+60	3.50	6.00	-	-	-	-	3.0	9.5	10.9	740	3120	3990	14.3	13.7	13.1
		50+50	5.00	5.00	-	-	-	-	3.0	10.0	12.2	740	3350	4450	15.4	14.7	14.1
		50+60	5.00	6.00	-	-	-	-	3.0	11.0	12.5	740	3685	4520	16.9	16.2	15.5
		60+60	6.00	6.00	-	-	-	-	3.0	12.0	12.5	740	4200	4520	19.3	18.4	17.7
	3 room	20+20+20	2.00	2.00	2.00	-	-	-	3.7	6.0	8.4	880	1460	2560	6.7	6.4	6.1
		20+20+25	2.00	2.00	2.50	-	-	-	3.7	6.5	9.0	880	1650	2700	7.6	7.2	6.9
		20+20+35	2.00	2.00	3.50	-	-	-	3.7	7.5	9.5	880	1980	3120	9.1	8.7	8.3
		20+20+50	2.00	2.00	5.00	-	-	-	3.7	9.0	11.7	880	2600	4120	11.9	11.4	10.9
		20+20+60	2.00	2.00	6.00	-	-	-	3.7	10.0	12.6	880	3120	4680	14.3	13.7	13.1
		20+25+25	2.00	2.50	2.50	-	-	-	3.7	7.0	9.6	880	1850	3210	8.5	8.1	7.8
		20+25+35	2.00	2.50	3.50	-	-	-	3.7	8.0	10.1	880	2320	3630	10.7	10.2	9.8

MULTI-SPLIT SYSTEM

Indoor unit combination			Cooling capacity (kW)									Power consumption(W)			Standard current(A)		
			Room cooling capacity						Total capacity			Min.	Standard	Max.	220V	230V	240V
			A	B	C	D	E	F	Min.	Standard	Max.						
Cooling operation	3 room	20+25+50	2.00	2.50	5.00	-	-	-	3.7	9.5	12.3	880	2980	4510	13.7	13.1	12.5
		20+25+60	2.00	2.50	6.00	-	-	-	3.7	10.5	12.8	880	3590	4800	16.5	15.8	15.1
		20+35+35	2.00	3.50	3.50	-	-	-	3.7	9.0	10.6	880	2780	4120	12.8	12.2	11.7
		20+35+50	2.00	3.50	5.00	-	-	-	3.7	10.5	12.8	880	3590	4800	16.5	15.8	15.1
		20+35+60	2.00	3.50	6.00	-	-	-	3.7	11.5	12.8	880	3950	4800	18.1	17.3	16.6
		20+50+50	2.00	5.00	5.00	-	-	-	3.7	12.0	12.8	880	4230	4800	19.4	18.6	17.8
		20+50+60	1.92	4.81	5.77	-	-	-	3.7	12.5	12.8	880	4450	4800	20.4	19.5	18.7
		20+60+60	1.79	5.36	5.36	-	-	-	3.7	12.5	12.8	880	4450	4800	20.4	19.5	18.7
		25+25+25	2.50	2.50	2.50	-	-	-	3.7	7.5	10.2	880	2030	3640	9.3	8.9	8.5
		25+25+35	2.50	2.50	3.50	-	-	-	3.7	8.5	10.7	880	2520	3900	11.6	11.1	10.6
		25+25+50	2.50	2.50	5.00	-	-	-	3.7	10.0	12.8	880	3260	4800	15.0	14.3	13.7
		25+25+60	2.50	2.50	6.00	-	-	-	3.7	11.0	12.8	880	3720	4800	17.1	16.3	15.7
		25+35+35	2.50	3.50	3.50	-	-	-	3.7	9.5	11.2	880	2980	4510	13.7	13.1	12.5
		25+35+50	2.50	3.50	5.00	-	-	-	3.7	11.0	12.8	880	3720	4800	17.1	16.3	15.7
		25+35+60	2.50	3.50	6.00	-	-	-	3.7	12.0	12.8	880	4230	4800	19.4	18.6	17.8
		25+50+50	2.50	5.00	5.00	-	-	-	3.7	12.5	12.8	880	4450	4800	20.4	19.5	18.7
		25+50+60	2.31	4.63	5.56	-	-	-	3.7	12.5	12.8	880	4450	4800	20.4	19.5	18.7
		25+60+60	2.16	5.17	5.17	-	-	-	3.7	12.5	12.8	880	4450	4800	20.4	19.5	18.7
		35+35+35	3.50	3.50	3.50	-	-	-	3.7	10.5	11.7	880	3590	4180	16.5	15.8	15.1
		35+35+50	3.50	3.50	5.00	-	-	-	3.7	12.0	12.8	880	4230	4800	19.4	18.6	17.8
		35+35+60	3.37	3.37	5.77	-	-	-	3.7	12.5	12.8	880	4450	4800	20.4	19.5	18.7
		35+50+50	3.24	4.63	4.63	-	-	-	3.7	12.5	12.8	880	4450	4800	20.4	19.5	18.7
		35+50+60	3.02	4.31	5.17	-	-	-	3.7	12.5	12.8	880	4450	4800	20.2	19.3	18.5
		35+60+60	2.82	4.84	4.84	-	-	-	3.7	12.5	12.8	880	4450	4800	20.2	19.3	18.5
		50+50+50	4.17	4.17	4.17	-	-	-	3.7	12.5	12.8	880	4440	4800	20.4	19.5	18.7
		50+50+60	3.91	3.91	4.69	-	-	-	3.7	12.5	12.8	880	4440	4800	20.4	19.5	18.7
		50+60+60	3.68	4.41	4.41	-	-	-	3.7	12.5	12.8	880	4430	4800	20.3	19.5	18.6
		60+60+60	4.17	4.17	4.17	-	-	-	3.7	12.5	12.8	880	4430	4800	20.3	19.5	18.6
	4 room	20+20+20+20	2.00	2.00	2.00	2.00	-	-	4.4	8.0	11.2	1100	2050	3680	9.3	8.9	8.6
		20+20+20+25	2.00	2.00	2.00	2.50	-	-	4.4	8.5	11.8	1100	2320	3890	10.6	10.1	9.7
		20+20+20+35	2.00	2.00	2.00	3.50	-	-	4.4	9.5	12.3	1100	2820	4530	12.8	12.3	11.8
		20+20+20+50	2.00	2.00	2.00	5.00	-	-	4.4	11.0	13.0	1100	3480	4800	15.8	15.1	14.5
		20+20+20+60	2.00	2.00	2.00	6.00	-	-	4.4	12.0	13.0	1100	3980	4800	18.1	17.3	16.6
		20+20+25+25	2.00	2.00	2.50	2.50	-	-	4.4	9.0	12.4	1100	2520	4590	11.5	11.0	10.5
		20+20+25+35	2.00	2.00	2.50	3.50	-	-	4.4	10.0	12.9	1100	3120	4780	14.2	13.6	13.0
		20+20+25+50	2.00	2.00	2.50	5.00	-	-	4.4	11.5	13.0	1100	3720	4800	16.9	16.2	15.5
		20+20+25+60	2.00	2.00	2.50	6.00	-	-	4.4	12.5	13.0	1100	4600	4800	20.9	20.0	19.2
		20+20+35+35	2.00	2.00	3.50	3.50	-	-	4.4	11.0	13.0	1100	3480	4800	15.8	15.1	14.5
		20+20+35+50	2.00	2.00	3.50	5.00	-	-	4.4	12.5	13.0	1100	4600	4800	20.9	20.0	19.2
		20+20+35+60	1.85	1.85	3.24	5.56	-	-	4.4	12.5	13.0	1100	4590	4800	20.9	20.0	19.1
		20+20+50+50	1.79	1.79	4.46	4.46	-	-	4.4	12.5	13.0	1100	4590	4800	20.9	20.0	19.1
		20+20+50+60	1.67	1.67	4.17	5.00	-	-	4.4	12.5	13.0	1100	4590	4800	20.9	20.0	19.1
		20+20+60+60	1.56	1.56	4.69	4.69	-	-	4.4	12.5	13.0	1100	4580	4800	20.8	19.9	19.1
		20+25+25+25	2.00	2.50	2.50	2.50	-	-	4.4	9.5	13.0	1100	2820	4800	12.8	12.3	11.8
		20+25+25+35	2.00	2.50	2.50	3.50	-	-	4.4	10.5	13.0	1100	3340	4800	15.2	14.5	13.9
		20+25+25+50	2.00	2.50	2.50	5.00	-	-	4.4	12.0	13.0	1100	3980	4800	18.1	17.3	16.6
		20+25+25+60	1.92	2.40	2.40	5.77	-	-	4.4	12.5	13.0	1100	4600	4800	20.9	20.0	19.2
		20+25+35+35	2.00	2.50	3.50	3.50	-	-	4.4	11.5	13.0	1100	3720	4800	16.9	16.2	15.5
		20+25+35+50	1.92	2.40	3.37	4.81	-	-	4.4	12.5	13.0	1100	4600	4800	20.9	20.0	19.2
		20+25+35+60	1.79	2.23	3.13	5.36	-	-	4.4	12.5	13.0	1100	4590	4800	20.9	20.0	19.1
		20+25+50+50	1.72	2.16	4.31	4.31	-	-	4.4	12.5	13.0	1100	4590	4800	20.9	20.0	19.1
		20+25+50+60	1.61	2.02	4.03	4.84	-	-	4.4	12.5	13.0	1100	4580	4800	20.8	19.9	19.1
		20+25+60+60	1.52	1.89	4.55	4.55	-	-	4.4	12.5	13.0	1100	4580	4800	20.8	19.9	19.1
		20+35+35+35	2.00	3.50	3.50	3.50	-	-	4.4	12.5	13.0	1100	4600	4800	20.9	20.0	19.2
		20+35+35+50	1.79	3.13	3.13	4.46	-	-	4.4	12.5	13.0	1100	4590	4800	20.9	20.0	19.1
		20+35+35+60	1.67	2.92	2.92	5.00	-	-	4.4	12.5	13.0	1100	4590	4800	20.9	20.0	19.1
		20+35+50+50	1.61	2.82	4.03	4.03	-	-	4.4	12.5	13.0	1100	4580	4800	20.8	19.9	19.1
		20+35+50+60	1.52	2.65	3.79	4.55	-	-	4.4	12.5	13.0	1100	4580	4800	20.8	19.9	19.1
		20+35+60+60	1.43	2.50	4.29	4.29	-	-	5.4	12.5	13.0	1100	4570	4801	20.6	19.7	18.9
		20+50+50+50	1.47	3.68	3.68	3.68	-	-	4.4	12.5	13.0	1100	4580	4800	20.8	19.9	19.1
		20+50+50+60	1.39	3.47	3.47	4.17	-	-	4.4	12.5	13.0	1100	4570	4800	20.8	19.9	19.1
		20+50+60+60	1.32	3.29	3.95	3.95	-	-	4.4	12.5	13.0	1100	4560	4800	20.7	19.8	19.0
		25+25+25+25	2.50	2.50	2.50	2.50	-	-	4.4	10.0	13.0	1100	3120	4800	14.2	13.6	13.0
		25+25+25+35	2.50	2.50	2.50	3.50	-	-	4.4	11.0	13.0	1100	3480	4800	15.8	15.1	14.5
		25+25+25+50	2.50	2.50	2.50	5.00	-	-	4.4	12.5	13.0	1100	4600	4800	20.9	20.0	19.2
		25+25+25+60	2.31	2.31	2.31	5.56	-	-	4.4	12.5	13.0	1100	4590	4800	20.9	20.0	19.1
		25+25+35+35	2.50	2.50	3.50	3.50	-	-	4.4	12.0	13.0	1100	3980	4800	18.1	17.3	16.6
		25+25+35+50	2.31	2.31	3.24	4.63	-	-	4.4	12.5	13.0	1100	4590	4800	20.9	20.0	19.1
		25+25+35+60	2.16	2.16	3.02	5.17			4.4	12.5	13.0	1100	4590	4800	20.9	20.0	19.1
		25+25+50+50	2.08	2.08	4.17	4.17	-	-	4.4	12.5	13.0	1100	4590	4800	20.9	20.0	19.1
		25+25+50+60	1.95	1.95	3.91	4.69	-	-	4.4	12.5	13.0	1100	4580	4800	20.8	19.9	19.1
		25+25+60+60	1.84	1.84	4.41	4.41	-	-	4.4	12.5	13.0	1100	4580	4800	20.8	19.9	19.1
		25+35+35+35	2.40	3.37	3.37	3.37	-	-	4.4	12.5	13.0	1100	4600	4800	20.9	20.0	19.2
		25+35+35+50	2.16	3.02	3.02	4.31	-	-	4.4	12.5	13.0	1100	4590	4800	20.9	20.0	19.1
		25+35+35+60	2.02	2.82	2.82	4.84	-	-	4.4	12.5	13.0	1100	4580	4800	20.8	19.9	19.1
		25+35+50+50	1.95	2.73	3.91	3.91	-	-	4.4	12.5	13.0	1100	4580	4800	20.8	19.9	19.1
		25+35+50+60	1.84	2.57	3.68	4.41	-	-	4.4	12.5	13.0	1100	4580	4800	20.8	19.9	19.1
		25+35+60+60	1.74	2.43	4.17	4.17	-	-	4.4	12.5	13.0	1100	4570	4800	20.8	19.9	19.1
		25+50+50+50	1.79	3.57	3.57	3.57	-	-	4.4	12.5	13.0	1100	4570	4800	20.8	19.9	19.1
		25+50+50+60	1.69	3.38	3.38	4.05	-	-	4.4	12.5	13.0	1100	4570	4800	20.8	19.9	19.1
		25+50+60+60	1.60	3.21	3.85	3.85	-	-	4.4	12.5	13.0	1100	4560	4800	20.7	19.8	19.0
		35+35+35+35	3.13	3.13	3.13	3.13	-	-	4.4	12.5	13.0	1100	4590	4800	20.9	20.0	19.1
		35+35+35+50	2.82	2.82	2.82	4.03	-	-	4.4	12.5	13.0	1100	4580	4800	20.8	19.9	19.1
		35+35+35+60	2.65	2.65	2.65	4.55	-	-	4.4	12.5	13.0	1100	4580	4800	20.8	19.9	19.1
		35+35+50+50	2.57	2.57	3.68	3.68	-	-	4.4	12.5	13.0	1100	4580	4800	20.8	19.9	19.1
		35+35+50+60	2.43	2.43	3.47	4.17	-	-	4.4	12.5	13.0	1100	4570	4800	20.8	19.9	19.1
		35+35+60+60	2.30	2.30	3.95	3.95	-	-	4.4	12.5	13.0	1100	4560	4800	20.7	19.8	19.0
		35+50+50+50	2.36	3.38	3.38	3.38	-	-	4.4	12.5	13.0	1100	4570	4800	20.8	19.9	19.1
		35+50+50+60	2.24	3.21	3.21	3.85	-	-	4.4	12.5	13.0	1100	4560	4800	20.7	19.8	19.0

Indoor unit combination			Cooling capacity (kW)									Power consumption(W)			Standard current(A)		
			Room cooling capacity						Total capacity								
			A	B	C	D	E	F	Min.	Standard	Max.	Min.	Standard	Max.	220V	230V	240V
Cooling operation	5 room	20+20+20+20+20	2.00	2.00	2.00	2.00	2.00	-	5.1	10.0	13.5	1210	2880	4800	13.1	12.5	12.0
		20+20+20+20+25	2.00	2.00	2.00	2.00	2.50	-	5.1	10.5	13.5	1210	3120	4800	14.2	13.6	13.0
		20+20+20+20+35	2.00	2.00	2.00	2.00	3.50	-	5.1	11.5	13.5	1210	3620	4800	16.5	15.8	15.1
		20+20+20+20+50	1.92	1.92	1.92	1.92	4.81	-	5.1	12.5	13.5	1210	4320	4800	19.7	18.8	18.0
		20+20+20+20+60	1.79	1.79	1.79	1.79	5.36	-	5.1	12.5	13.5	1210	4310	4800	19.6	18.8	18.0
		20+20+20+25+25	2.00	2.00	2.00	2.50	2.50	-	5.1	11.0	13.5	1210	3320	4800	15.1	14.4	13.8
		20+20+20+25+35	2.00	2.00	2.00	2.50	3.50	-	5.1	12.0	13.5	1210	3990	4800	18.2	17.4	16.6
		20+20+20+25+50	1.85	1.85	1.85	2.31	4.63	-	5.1	12.5	13.5	1210	4320	4800	19.7	18.8	18.0
		20+20+20+25+60	1.72	1.72	1.72	2.16	5.17	-	5.1	12.5	13.5	1210	4310	4800	19.6	18.8	18.0
		20+20+20+35+35	1.92	1.92	1.92	3.37	3.37	-	5.1	12.5	13.5	1210	4320	4800	19.7	18.8	18.0
		20+20+20+35+50	1.72	1.72	1.72	3.02	4.31	-	5.1	12.5	13.5	1210	4310	4800	19.6	18.8	18.0
		20+20+20+35+60	1.61	1.61	1.61	2.82	4.84	-	5.1	12.5	13.5	1210	4300	4800	19.6	18.7	17.9
		20+20+20+50+50	1.56	1.56	1.56	3.91	3.91	-	5.1	12.5	13.5	1210	4300	4800	19.6	18.7	17.9
		20+20+20+50+60	1.47	1.47	1.47	3.68	4.41	-	5.1	12.5	13.5	1210	4290	4800	19.5	18.7	17.9
		20+20+20+60+60	1.39	1.39	1.39	4.17	4.17	-	5.1	12.5	13.5	1210	4280	4800	19.5	18.6	17.9
		20+20+25+25+25	2.00	2.00	2.50	2.50	2.50	-	5.1	11.5	13.5	1210	3620	4800	16.5	15.8	15.1
		20+20+25+25+35	2.00	2.00	2.50	2.50	3.50	-	5.1	12.5	13.5	1210	4330	4800	19.7	18.8	18.1
		20+20+25+25+50	1.79	1.79	2.23	2.23	4.46	-	5.1	12.5	13.5	1210	4310	4800	19.6	18.8	18.0
		20+20+25+25+60	1.67	1.67	2.08	2.08	5.00	-	5.1	12.5	13.5	1210	4300	4800	19.6	18.7	17.9
		20+20+25+35+35	1.85	1.85	2.31	3.24	3.24	-	5.1	12.5	13.5	1210	4320	4800	19.7	18.8	18.0
		20+20+25+35+50	1.67	1.67	2.08	2.92	4.17	-	5.1	12.5	13.5	1210	4300	4800	19.6	18.7	17.9
		20+20+25+35+60	1.56	1.56	1.95	2.73	4.69	-	5.1	12.5	13.5	1210	4300	4800	19.6	18.7	17.9
		20+20+25+50+50	1.52	1.52	1.89	3.79	3.79	-	5.1	12.5	13.5	1210	4290	4800	19.5	18.7	17.9
		20+20+25+50+60	1.43	1.43	1.79	3.57	4.29	-	5.1	12.5	13.5	1210	4280	4800	19.5	18.6	17.9
		20+20+25+60+60	1.35	1.35	1.69	4.05	4.05	-	5.1	12.5	13.5	1210	4280	4800	19.5	18.6	17.9
		20+20+35+35+35	1.72	1.72	3.02	3.02	3.02	-	5.1	12.5	13.5	1210	4310	4800	19.6	18.8	18.0
		20+20+35+35+50	1.56	1.56	2.73	2.73	3.91	-	5.1	12.5	13.5	1210	4300	4800	19.6	18.7	17.9
		20+20+35+35+60	1.47	1.47	2.57	2.57	4.41	-	5.1	12.5	13.5	1210	4290	4800	19.5	18.7	17.9
		20+20+35+50+50	1.43	1.43	2.50	3.57	3.57	-	5.1	12.5	13.5	1210	4280	4800	19.5	18.6	17.9
		20+20+35+50+60	1.35	1.35	2.36	3.38	4.05	-	5.1	12.5	13.5	1210	4280	4800	19.5	18.6	17.9
		20+20+35+60+60	1.28	1.28	2.24	3.85	3.85	-	5.1	12.5	13.5	1210	4270	4800	19.4	18.6	17.8
		20+20+50+50+50	1.32	1.32	3.29	3.29	3.29	-	5.1	12.5	13.5	1210	4270	4800	19.4	18.6	17.8
		20+25+25+25+25	2.00	2.50	2.50	2.50	2.50	-	5.1	12.0	13.5	1210	3990	4800	18.2	17.4	16.6
		20+25+25+25+35	1.92	2.40	2.40	2.40	3.37	-	5.1	12.5	13.5	1210	4320	4800	19.7	18.8	18.0
		20+25+25+25+50	1.72	2.16	2.16	2.16	4.31	-	5.1	12.5	13.5	1210	4310	4800	19.6	18.8	18.0
		20+25+25+25+60	1.61	2.02	2.02	2.02	4.84	-	5.1	12.5	13.5	1210	4300	4800	19.6	18.7	17.9
		20+25+25+35+35	1.79	2.23	2.23	3.13	3.13	-	5.1	12.5	13.5	1210	4310	4800	19.6	18.8	18.0
		20+25+25+35+50	1.61	2.02	2.02	2.82	4.03	-	5.1	12.5	13.5	1210	4300	4800	19.6	18.7	17.9
		20+25+25+35+60	1.52	1.89	1.89	2.65	4.55	-	5.1	12.5	13.5	1210	4290	4800	19.5	18.7	17.9
		20+25+25+50+50	1.47	1.84	1.84	3.68	3.68	-	5.1	12.5	13.5	1210	4290	4800	19.5	18.7	17.9
		20+25+25+50+60	1.39	1.74	1.74	3.47	4.17	-	5.1	12.5	13.5	1210	4280	4800	19.5	18.6	17.9
		20+25+25+60+60	1.32	1.64	1.64	3.95	3.95	-	5.1	12.5	13.5	1210	4270	4800	19.4	18.6	17.8
		20+25+35+35+35	1.67	2.08	2.92	2.92	2.92	-	5.1	12.5	13.5	1210	4300	4800	19.6	18.7	17.9
		20+25+35+35+50	1.52	1.89	2.65	2.65	3.79	-	5.1	12.5	13.5	1210	4290	4800	19.5	18.7	17.9
		20+25+35+35+60	1.43	1.79	2.50	2.50	4.29	-	5.1	12.5	13.5	1210	4280	4800	19.5	18.6	17.9
		20+25+35+50+50	1.39	1.74	2.43	3.47	3.47	-	5.1	12.5	13.5	1210	4280	4800	19.5	18.6	17.9
		20+25+35+50+60	1.32	1.64	2.30	3.29	3.95	-	5.1	12.5	13.5	1210	4270	4800	19.4	18.6	17.8
		20+25+50+50+50	1.28	1.60	3.21	3.21	3.21	-	5.1	12.5	13.5	1210	4270	4800	19.4	18.6	17.8
		20+35+35+35+35	1.56	2.73	2.73	2.73	2.73	-	5.1	12.5	13.5	1210	4300	4800	19.6	18.7	17.9
		20+35+35+35+50	1.43	2.50	2.50	2.50	3.57	-	5.1	12.5	13.5	1210	4280	4800	19.5	18.6	17.9
		20+35+35+35+60	1.35	2.36	2.36	2.36	4.05	-	5.1	12.5	13.5	1210	4280	4800	19.5	18.6	17.9
		20+35+35+50+50	1.32	2.30	2.30	3.29	3.29	-	5.1	12.5	13.5	1210	4270	4800	19.4	18.6	17.8
		25+25+25+25+25	2.50	2.50	2.50	2.50	2.50	-	5.1	12.5	13.5	1210	4330	4800	19.7	18.8	18.1
		25+25+25+25+35	2.31	2.31	2.31	2.31	3.24	-	5.1	12.5	13.5	1210	4320	4800	19.7	18.8	18.0
		25+25+25+25+50	2.08	2.08	2.08	2.08	4.17	-	5.1	12.5	13.5	1210	4300	4800	19.6	18.7	17.9
		25+25+25+25+60	1.95	1.95	1.95	1.95	4.69	-	5.1	12.5	13.5	1210	4300	4800	19.6	18.7	17.9
		25+25+25+35+35	2.16	2.16	2.16	3.02	3.02	-	5.1	12.5	13.5	1210	4310	4800	19.6	18.8	18.0
		25+25+25+35+50	1.95	1.95	1.95	2.73	3.91	-	5.1	12.5	13.5	1210	4300	4800	19.6	18.7	17.9
		25+25+25+35+60	1.84	1.84	1.84	2.57	4.41	-	5.1	12.5	13.5	1210	4290	4800	19.5	18.7	17.9
		25+25+25+50+50	1.79	1.79	1.79	3.57	3.57	-	5.1	12.5	13.5	1210	4280	4800	19.5	18.6	17.9
		25+25+25+50+60	1.69	1.69	1.69	3.38	4.05	-	5.1	12.5	13.5	1210	4280	4800	19.5	18.6	17.9
		25+25+25+60+60	1.60	1.60	1.60	3.85	3.85	-	5.1	12.5	13.5	1210	4270	4800	19.4	18.6	17.8
		25+25+35+35+35	2.02	2.02	2.82	2.82	2.82	-	5.1	12.5	13.5	1210	4300	4800	19.6	18.7	17.9
		25+25+35+35+50	1.84	1.84	2.57	2.57	3.68	-	5.1	12.5	13.5	1210	4290	4800	19.5	18.7	17.9
		25+25+35+35+60	1.74	1.74	2.43	2.43	4.17	-	5.1	12.5	13.5	1210	4280	4800	19.5	18.6	17.9
		25+25+35+50+50	1.69	1.69	2.36	3.38	3.38	-	5.1	12.5	13.5	1210	4280	4800	19.5	18.6	17.9
		25+25+35+50+60	1.60	1.60	2.24	3.21	3.85	-	5.1	12.5	13.5	1210	4270	4800	19.4	18.6	17.8
		25+35+35+35+35	1.89	2.65	2.65	2.65	2.65	-	5.1	12.5	13.5	1210	4290	4800	19.5	18.7	17.9
		25+35+35+35+50	1.74	2.43	2.43	2.43	3.47	-	5.1	12.5	13.5	1210	4280	4800	19.5	18.6	17.9
		25+35+35+35+60	1.64	2.30	2.30	2.30	3.95	-	5.1	12.5	13.5	1210	4270	4800	19.4	18.6	17.8
		25+35+35+50+50	1.60	2.24	2.24	3.21	3.21	-	5.1	12.5	13.5	1210	4270	4800	19.4	18.6	17.8
		35+35+35+35+35	2.50	2.50	2.50	2.50	2.50	-	5.1	12.5	13.5	1210	4280	4800	19.5	18.6	17.9
		35+35+35+35+50	2.30	2.30	2.30	2.30	3.29	-	5.1	12.5	13.5	1210	4270	4800	19.4	18.6	17.8
	6 room	20+20+20+20+20+20	2.00	2.00	2.00	2.00	2.00	2.00	5.5	12.0	13.8	1280	3660	4620	16.7	15.9	15.3
		20+20+20+20+20+25	2.00	2.00	2.00	2.00	2.00	2.50	5.5	12.5	14.0	1280	3900	4800	17.7	17.0	16.3
		20+20+20+20+20+35	1.85	1.85	1.85	1.85	1.85	3.24	5.5	12.5	14.0	1280	3890	4800	17.7	16.9	16.2
		20+20+20+20+20+50	1.67	1.67	1.67	1.67	1.67	4.17	5.5	12.5	14.0	1280	3860	4800	17.6	16.8	16.1
		20+20+20+20+20+60	1.56	1.56	1.56	1.56	1.56	4.69	5.5	12.5	14.0	1280	3860	4800	17.6	16.8	16.1
		20+20+20+20+25+25	1.92	1.92	1.92	1.92	2.40	2.40	5.5	12.5	14.0	1280	3900	4800	17.7	17.0	16.3
		20+20+20+20+25+35	1.79	1.79	1.79	1.79	2.23	3.13	5.5	12.5	14.0	1280	3880	4800	17.7	16.9	16.2
		20+20+20+20+25+50	1.61	1.61	1.61	1.61	2.02	4.03	5.5	12.5	14.0	1280	3860	4800	17.6	16.8	16.1
		20+20+20+20+25+60	1.52	1.52	1.52	1.52	1.89	4.55	5.5	12.5	14.0	1280	3850	4800	17.5	16.8	16.1
		20+20+20+20+35+35	1.67	1.67	1.67	1.67	2.92	2.92	5.5	12.5	14.0	1280	3860	4800	17.6	16.8	16.1
		20+20+20+20+35+50	1.52	1.52	1.52	1.52	2.65	3.79	5.5	12.5	14.0	1280	3850	4800	17.5	16.8	16.1
		20+20+20+20+35+60	1.43	1.43	1.43	1.43	2.50	4.29	5.5	12.5	14.0	1280	3830	4800	17.4	16.7	16.0
		20+20+20+20+50+50	1.39	1.39	1.39	1.39	3.47	3.47	5.5	12.5	14.0	1280	3820	4800	17.4	16.6	15.9
		20+20+20+20+50+60	1.32	1.32	1.32	1.32	3.29	3.95	5.5	12.5	14.0	1280	3800	4800	17.3	16.5	15.8
		20+20+20+25+25+25	1.85	1.85	1.85	2.31	2.31	2.31	5.5	12.5	14.0	1280	3890	4800	17.7	16.9	16.2
		20+20+20+25+25+35	1.72	1.72	1.72	2.16	2.16	3.02	5.5	12.5	14.0	1280	3870	4800	17.6	16.8	16.1
		20+20+20+25+25+50	1.56	1.56	1.56	1.95	1.95	3.91	5.5	12.5	14.0	1280	3860	4800	17.6	16.8	16.1

Indoor unit combination			Cooling capacity (kW)									Power consumption(W)			Standard current(A)		
			Room cooling capacity						Total capacity			Min.	Standard	Max.	220V	230V	240V
			A	B	C	D	E	F	Min.	Standard	Max.						
Cooling operation	6 room	20+20+20+25+25+60	1.47	1.47	1.47	1.84	1.84	4.41	5.5	12.5	14.0	1280	3840	4800	17.5	16.7	16.0
		20+20+20+25+35+35	1.61	1.61	1.61	2.02	2.82	2.82	5.5	12.5	14.0	1280	3860	4800	17.6	16.8	16.1
		20+20+20+25+35+50	1.47	1.47	1.47	1.84	2.57	3.68	5.5	12.5	14.0	1280	3840	4800	17.5	16.7	16.0
		20+20+20+25+35+60	1.39	1.39	1.39	1.74	2.43	4.17	5.5	12.5	14.0	1280	3820	4800	17.4	16.6	15.9
		20+20+20+25+50+50	1.35	1.35	1.35	1.69	3.38	3.38	5.5	12.5	14.0	1280	3810	4800	17.3	16.6	15.9
		20+20+20+25+50+60	1.28	1.28	1.28	1.60	3.21	3.85	5.5	12.5	14.0	1280	3800	4800	17.3	16.5	15.8
		20+20+20+35+35+35	1.52	1.52	1.52	2.65	2.65	2.65	5.5	12.5	14.0	1280	3850	4800	17.5	16.8	16.1
		20+20+20+35+35+50	1.39	1.39	1.39	2.43	2.43	3.47	5.5	12.5	14.0	1280	3820	4800	17.4	16.6	15.9
		20+20+20+35+35+60	1.32	1.32	1.32	2.30	2.30	3.95	5.5	12.5	14.0	1280	3800	4800	17.3	16.5	15.8
		20+20+20+35+50+50	1.28	1.28	1.28	2.24	3.21	3.21	5.5	12.5	14.0	1280	3800	4800	17.3	16.5	15.8
		20+20+25+25+25+25	1.79	1.79	2.23	2.23	2.23	2.23	5.5	12.5	14.0	1280	3880	4800	17.7	16.9	16.2
		20+20+25+25+25+35	1.67	1.67	2.08	2.08	2.08	2.92	5.5	12.5	14.0	1280	3860	4800	17.6	16.8	16.1
		20+20+25+25+25+50	1.52	1.52	1.89	1.89	1.89	3.79	5.5	12.5	14.0	1280	3850	4800	17.5	16.8	16.1
		20+20+25+25+25+60	1.43	1.43	1.79	1.79	1.79	4.29	5.5	12.5	14.0	1280	3830	4800	17.4	16.7	16.0
		20+20+25+25+35+35	1.56	1.56	1.95	1.95	2.73	2.73	5.5	12.5	14.0	1280	3860	4800	17.6	16.8	16.1
		20+20+25+25+35+50	1.43	1.43	1.79	1.79	2.50	3.57	5.5	12.5	14.0	1280	3830	4800	17.4	16.7	16.0
		20+20+25+25+35+60	1.35	1.35	1.69	1.69	2.36	4.05	5.5	12.5	14.0	1280	3810	4800	17.3	16.6	15.9
		20+20+25+25+50+50	1.32	1.32	1.64	1.64	3.29	3.29	5.5	12.5	14.0	1280	3800	4800	17.3	16.5	15.8
		20+20+25+35+35+35	1.47	1.47	1.84	2.57	2.57	2.57	5.5	12.5	14.0	1280	3840	4800	17.5	16.7	16.0
		20+20+25+35+35+50	1.35	1.35	1.69	2.36	2.36	3.38	5.5	12.5	14.0	1280	3810	4800	17.3	16.6	15.9
		20+20+25+35+35+60	1.28	1.28	1.60	2.24	2.24	3.85	5.5	12.5	14.0	1280	3800	4800	17.3	16.5	15.8
		20+20+35+35+35+35	1.39	1.39	2.43	2.43	2.43	2.43	5.5	12.5	14.0	1280	3820	4800	17.4	16.6	15.9
		20+20+35+35+35+50	1.28	1.28	2.24	2.24	2.24	3.21	5.5	12.5	14.0	1280	3800	4800	17.3	16.5	15.8
		20+25+25+25+25+25	1.72	2.16	2.16	2.16	2.16	2.16	5.5	12.5	14.0	1280	3870	4800	17.6	16.8	16.1
		20+25+25+25+25+35	1.61	2.02	2.02	2.02	2.02	2.82	5.5	12.5	14.0	1280	3860	4800	17.6	16.8	16.1
		20+25+25+25+25+50	1.47	1.84	1.84	1.84	1.84	3.68	5.5	12.5	14.0	1280	3840	4800	17.5	16.7	16.0
		20+25+25+25+25+60	1.39	1.74	1.74	1.74	1.74	4.17	5.5	12.5	14.0	1280	3820	4800	17.4	16.6	15.9
		20+25+25+25+35+35	1.52	1.89	1.89	1.89	2.65	2.65	5.5	12.5	14.0	1280	3850	4800	17.5	16.8	16.1
		20+25+25+25+35+50	1.39	1.74	1.74	1.74	2.43	3.47	5.5	12.5	14.0	1280	3820	4800	17.4	16.6	15.9
		20+25+25+25+35+60	1.32	1.64	1.64	1.64	2.30	3.95	5.5	12.5	14.0	1280	3800	4800	17.3	16.5	15.8
		20+25+25+25+50+50	1.28	1.60	1.60	1.60	3.21	3.21	5.5	12.5	14.0	1280	3800	4800	17.3	16.5	15.8
		20+25+25+35+35+35	1.43	1.79	1.79	2.50	2.50	2.50	5.5	12.5	14.0	1280	3830	4800	17.4	16.7	16.0
		20+25+25+35+35+50	1.32	1.64	1.64	2.30	2.30	3.29	5.5	12.5	14.0	1280	3800	4800	17.3	16.5	15.8
		20+25+35+35+35+35	1.35	1.69	2.36	2.36	2.36	2.36	5.5	12.5	14.0	1280	3810	4800	17.3	16.6	15.9
		20+35+35+35+35+35	1.28	2.24	2.24	2.24	2.24	2.24	5.5	12.5	14.0	1280	3800	4800	17.3	16.5	15.8
		25+25+25+25+25+25	2.08	2.08	2.08	2.08	2.08	2.08	5.5	12.5	14.0	1280	3860	4800	17.6	16.8	16.1
		25+25+25+25+25+35	1.95	1.95	1.95	1.95	1.95	2.73	5.5	12.5	14.0	1280	3860	4800	17.6	16.8	16.1
		25+25+25+25+25+50	1.79	1.79	1.79	1.79	1.79	3.57	5.5	12.5	14.0	1280	3830	4800	17.4	16.7	16.0
		25+25+25+25+25+60	1.69	1.69	1.69	1.69	1.69	4.05	5.5	12.5	14.0	1280	3810	4800	17.3	16.6	15.9
		25+25+25+25+35+35	1.84	1.84	1.84	1.84	2.57	2.57	5.5	12.5	14.0	1280	3840	4800	17.5	16.7	16.0
		25+25+25+25+35+50	1.69	1.69	1.69	1.69	2.36	3.38	5.5	12.5	14.0	1280	3810	4800	17.3	16.6	15.9
		25+25+25+25+35+60	1.60	1.60	1.60	1.60	2.24	3.85	5.5	12.5	14.0	1280	3800	4800	17.3	16.5	15.8
		25+25+25+35+35+35	1.74	1.74	1.74	2.43	2.43	2.43	5.5	12.5	14.0	1280	3820	4800	17.4	16.6	15.9
		25+25+25+35+35+50	1.60	1.60	1.60	2.24	2.24	3.21	5.5	12.5	14.0	1280	3800	4800	17.3	16.5	15.8
		25+25+35+35+35+35	1.64	1.64	2.30	2.30	2.30	2.30	5.5	12.5	14.0	1280	3800	4800	17.3	16.5	15.8

SCM125ZM-S Table of Indoor unit combination with other indoor unit

Indoor unit combination			Heating capacity (kW)									Power consumption(W)			Standard current(A)		
			Room heating capacity						Total capacity			Min.	Standard	Max.	220V	230V	240V
			A	B	C	D	E	F	Min.	Standard	Max.						
Heating operation	1 room	20	3.0	-	-	-	-	-	1.5	3.0	3.6	700	1220	1330	5.6	5.4	5.1
		25	3.4	-	-	-	-	-	1.5	3.4	4.1	700	1265	1540	5.8	5.6	5.3
		35	4.5	-	-	-	-	-	1.5	4.5	4.9	700	1650	1840	7.6	7.2	6.9
		50	5.8	-	-	-	-	-	1.5	5.8	6.4	700	2120	2410	9.7	9.3	8.9
		60	6.8	-	-	-	-	-	1.5	6.8	7.4	700	2500	2760	11.5	11.0	10.5
		71	8.0	-	-	-	-	-	1.5	8.0	8.1	700	3020	3090	13.9	13.3	12.7
	2 room	20+20	3.00	3.00	-	-	-	-	2.1	6.0	7.2	750	1540	1860	7.1	6.8	6.5
		20+25	2.84	3.56	-	-	-	-	2.1	6.4	7.7	750	1660	2210	7.6	7.3	7.0
		20+35	2.73	4.77	-	-	-	-	2.1	7.5	8.5	750	1990	2520	9.1	8.7	8.4
		20+50	2.51	6.29	-	-	-	-	2.1	8.8	10.0	750	2430	3220	11.2	10.7	10.2
		20+60	2.45	7.35	-	-	-	-	2.1	9.8	11.0	750	2840	3620	13.0	12.5	12.0
		20+71	2.42	8.58	-	-	-	-	2.1	11.0	11.6	750	2840	3620	13.0	12.5	12.0
		25+25	3.40	3.40	-	-	-	-	2.1	6.8	8.2	750	1770	2420	8.1	7.8	7.4
		25+35	3.29	4.61	-	-	-	-	2.1	7.9	9.0	750	2140	2820	9.8	9.4	9.0
		25+50	3.07	6.13	-	-	-	-	2.1	9.2	10.5	750	2630	3610	12.1	11.6	11.1
		25+60	3.00	7.20	-	-	-	-	2.1	10.2	11.5	750	3040	3790	14.0	13.4	12.8
		25+71	2.97	8.43	-	-	-	-	2.1	11.4	12.1	750	3440	4250	15.8	15.1	14.5
		35+35	4.50	4.50	-	-	-	-	2.1	9.0	9.8	750	2520	3210	11.6	11.1	10.6
		35+50	4.24	6.06	-	-	-	-	2.1	10.3	11.3	750	3040	3710	14.0	13.4	12.8
		35+60	4.16	7.14	-	-	-	-	2.1	11.3	12.3	750	3420	4320	15.7	15.0	14.4
		35+71	4.13	8.37	-	-	-	-	2.1	12.5	12.9	750	4030	4690	18.5	17.7	17.0
		50+50	5.80	5.80	-	-	-	-	2.1	11.6	12.8	750	3660	4620	16.8	16.1	15.4
		50+60	5.73	6.87	-	-	-	-	2.1	12.6	13.8	750	4090	5230	18.8	18.0	17.2
		50+71	5.58	7.92					2.1	13.5	13.8	750	4540	5230	20.8	19.9	19.1
		60+60	6.75	6.75	-	-	-	-	2.1	13.5	13.8	750	4540	5230	20.8	19.9	19.1
		60+71	6.18	7.32	-	-	-	-	2.1	13.5	13.8	750	4540	5230	20.8	19.9	19.1
		71+71	6.75	6.75	-	-	-	-	2.1	13.5	13.8	750	4530	5230	20.8	19.9	19.1
	3 room	20+20+20	3.00	3.00	3.00	-	-	-	3.2	9.0	10.9	780	2270	3350	10.4	10.0	9.6
		20+20+25	2.89	2.89	3.62	-	-	-	3.2	9.4	11.4	780	2400	3550	11.0	10.5	10.1
		20+20+35	2.80	2.80	4.90	-	-	-	3.2	10.5	12.2	780	2760	3820	12.7	12.1	11.6
		20+20+50	2.62	2.62	6.56	-	-	-	3.2	11.8	13.7	780	3270	4290	15.0	14.4	13.8
		20+20+60	2.56	2.56	7.68	-	-	-	3.2	12.8	13.8	780	3690	4350	16.9	16.2	15.5
		20+20+71	2.43	2.43	8.64	-	-	-	3.2	13.5	13.8	780	4140	4350	19.0	18.2	17.4
		20+25+25	2.80	3.50	3.50	-	-	-	3.2	9.8	11.9	780	2560	3720	11.8	11.2	10.8
		20+25+35	2.73	3.41	4.77	-	-	-	3.2	10.9	12.7	780	2970	3990	13.6	13.0	12.5
		20+25+50	2.57	3.21	6.42	-	-	-	3.2	12.2	13.8	780	3480	4350	16.0	15.3	14.6
		20+25+60	2.51	3.14	7.54	-	-	-	3.2	13.2	13.8	780	3990	4350	18.3	17.5	16.8
		20+25+71	2.33	2.91	8.26	-	-	-	3.2	13.5	13.8	780	4140	4350	19.0	18.2	17.4
		20+35+35	2.67	4.67	4.67	-	-	-	3.2	12.0	13.5	780	3460	4220	15.9	15.2	14.6
		20+35+50	2.53	4.43	6.33	-	-	-	3.2	13.3	13.8	780	3980	4350	18.3	17.5	16.8

Indoor unit combination			Heating capacity (kW)									Power consumption(W)			Standard current(A)		
			Room heating capacity						Total capacity			Min.	Standard	Max.	220V	230V	240V
			A	B	C	D	E	F	Min.	Standard	Max.						
Heating operation	3 room	20+35+60	2.35	4.11	7.04	-	-	-	3.2	13.5	13.8	780	4130	4350	19.0	18.1	17.4
		20+35+71	2.14	3.75	7.61	-	-	-	3.2	13.5	13.8	780	4130	4350	19.0	18.1	17.4
		20+50+50	2.25	5.63	5.63	-	-	-	3.2	13.5	13.8	780	4130	4350	19.0	18.1	17.4
		20+50+60	2.08	5.19	6.23	-	-	-	3.2	13.5	13.8	780	4130	4350	19.0	18.1	17.4
		20+50+71	1.91	4.79	6.80	-	-	-	4.2	13.5	13.8	780	4130	4350	18.8	18.0	17.2
		20+60+60	1.93	5.79	5.79	-	-	-	5.2	13.5	13.8	780	4130	4350	18.6	17.8	17.0
		20+60+71	1.79	5.36	6.35	-	-	-	6.2	13.5	13.8	780	4120	4350	18.4	17.6	16.8
		20+71+71	1.67	5.92	5.92	-	-	-	7.2	13.5	13.8	780	4120	4350	18.2	17.4	16.7
		25+25+25	3.40	3.40	3.40	-	-	-	3.2	10.2	12.4	780	2760	3880	12.7	12.1	11.6
		25+25+35	3.32	3.32	4.65	-	-	-	3.2	11.3	13.2	780	3170	4120	14.6	13.9	13.3
		25+25+50	3.15	3.15	6.30	-	-	-	3.2	12.6	13.8	780	3690	4350	16.9	16.2	15.5
		25+25+60	3.07	3.07	7.36	-	-	-	3.2	13.5	13.8	780	4130	4350	19.0	18.1	17.4
		25+25+71	2.79	2.79	7.92	-	-	-	3.2	13.5	13.8	780	4130	4350	19.0	18.1	17.4
		25+35+35	3.26	4.57	4.57	-	-	-	3.2	12.4	13.8	780	3780	4350	17.4	16.6	15.9
		25+35+50	3.07	4.30	6.14	-	-	-	3.2	13.5	13.8	780	4140	4350	19.0	18.2	17.4
		25+35+60	2.81	3.94	6.75	-	-	-	3.2	13.5	13.8	780	4140	4350	19.0	18.2	17.4
		25+35+71	2.58	3.61	7.32	-	-	-	4.2	13.5	13.8	780	4130	4350	18.8	18.0	17.2
		25+50+50	2.70	5.40	5.40	-	-	-	3.2	13.5	13.8	780	4130	4350	19.0	18.1	17.4
		25+50+60	2.50	5.00	6.00	-	-	-	3.2	13.5	13.8	780	4130	4350	19.0	18.1	17.4
		25+50+71	2.31	4.62	6.57	-	-	-	3.2	13.5	13.8	780	4130	4350	19.0	18.1	17.4
		25+60+60	2.33	5.59	5.59	-	-	-	3.2	13.5	13.8	780	4130	4350	19.0	18.1	17.4
		25+60+71	2.16	5.19	6.14	-	-	-	3.2	13.5	13.8	780	4120	4350	18.9	18.1	17.3
		25+71+71	2.02	5.74	5.74	-	-	-	3.2	13.5	13.8	780	4120	4350	18.9	18.1	17.3
		35+35+35	4.50	4.50	4.50	-	-	-	3.2	13.5	13.8	780	4140	4350	19.0	18.2	17.4
		35+35+50	3.94	3.94	5.63	-	-	-	3.2	13.5	13.8	780	4140	4350	19.0	18.2	17.4
		35+35+60	3.63	3.63	6.23	-	-	-	3.2	13.5	13.8	780	4130	4350	19.0	18.1	17.4
		35+35+71	3.35	3.35	6.80	-	-	-	3.2	13.5	13.8	780	4130	4350	19.0	18.1	17.4
		35+50+50	3.50	5.00	5.00	-	-	-	3.2	13.5	13.8	780	4130	4350	19.0	18.1	17.4
		35+50+60	3.26	4.66	5.59	-	-	-	3.2	13.5	13.8	780	4130	4350	19.0	18.1	17.4
		35+50+71	3.03	4.33	6.14	-	-	-	3.2	13.5	13.8	780	4120	4350	18.9	18.1	17.3
		35+60+60	3.05	5.23	5.23	-	-	-	3.2	13.5	13.8	780	4120	4350	18.9	18.1	17.3
		35+60+71	2.85	4.88	5.77	-	-	-	3.2	13.5	13.8	780	4120	4350	18.9	18.1	17.3
		35+71+71	2.67	5.42	5.42	-	-	-	3.2	13.5	13.8	780	4120	4350	18.9	18.1	17.3
		50+50+50	4.50	4.50	4.50	-	-	-	3.2	13.5	13.8	780	4120	4350	18.9	18.1	17.3
		50+50+60	4.22	4.22	5.06	-	-	-	3.2	13.5	13.8	780	4120	4350	18.9	18.1	17.3
		50+50+71	3.95	3.95	5.61	-	-	-	3.2	13.5	13.8	780	4120	4350	18.9	18.1	17.3
		50+60+60	3.97	4.76	4.76	-	-	-	3.2	13.5	13.8	780	4120	4350	18.9	18.1	17.3
		50+60+71	3.73	4.48	5.30	-	-	-	3.2	13.5	13.8	780	4110	4350	18.9	18.1	17.3
		60+60+60	4.50	4.50	4.50	-	-	-	3.2	13.5	13.8	780	4110	4350	18.9	18.1	17.3
		60+60+71	4.24	4.24	5.02	-	-	-	3.2	13.5	13.8	780	4110	4350	18.9	18.1	17.3
	4 room	20+20+20+20	3.00	3.00	3.00	3.00	-	-	3.6	12.0	13.8	950	3270	3920	14.9	14.2	13.6
		20+20+20+25	2.92	2.92	2.92	3.65	-	-	3.6	12.4	13.8	950	3460	3920	15.7	15.1	14.4
		20+20+20+35	2.84	2.84	2.84	4.97	-	-	3.6	13.5	13.8	950	3770	3920	17.2	16.4	15.7
		20+20+20+50	2.45	2.45	2.45	6.14	-	-	3.6	13.5	13.8	950	3760	3920	17.1	16.4	15.7
		20+20+20+60	2.25	2.25	2.25	6.75	-	-	3.6	13.5	13.8	950	3760	3920	17.1	16.4	15.7
		20+20+20+71	2.06	2.06	2.06	7.32	-	-	3.6	13.5	13.8	950	3750	3920	16.9	16.2	15.5
		20+20+25+25	2.84	2.84	3.56	3.56	-	-	3.6	12.8	13.8	950	3510	3920	16.0	15.3	14.6
		20+20+25+35	2.70	2.70	3.38	4.73	-	-	3.6	13.5	13.8	950	3770	3920	17.2	16.4	15.7
		20+20+25+50	2.35	2.35	2.93	5.87	-	-	3.6	13.5	13.8	950	3760	3920	17.1	16.4	15.7
		20+20+25+60	2.16	2.16	2.70	6.48	-	-	3.6	13.5	13.8	950	3750	3920	17.1	16.3	15.6
		20+20+25+71	1.99	1.99	2.48	7.05	-	-	3.6	13.5	13.8	950	3750	3920	17.1	16.3	15.6
		20+20+35+35	2.45	2.45	4.30	4.30	-	-	3.6	13.5	13.8	950	3760	3920	17.1	16.4	15.7
		20+20+35+50	2.16	2.16	3.78	5.40	-	-	3.6	13.5	13.8	950	3750	3920	17.1	16.3	15.6
		20+20+35+60	2.00	2.00	3.50	6.00	-	-	3.6	13.5	13.8	950	3750	3920	17.1	16.3	15.6
		20+20+35+71	1.85	1.85	3.24	6.57	-	-	3.6	13.5	13.8	950	3740	3920	17.0	16.3	15.6
		20+20+50+50	1.93	1.93	4.82	4.82	-	-	3.6	13.5	13.8	950	3740	3920	17.0	16.3	15.6
		20+20+50+60	1.80	1.80	4.50	5.40	-	-	3.6	13.5	13.8	950	3740	3920	17.0	16.3	15.6
		20+20+50+71	1.68	1.68	4.19	5.95	-	-	3.6	13.5	13.8	950	3740	3920	17.0	16.3	15.6
		20+20+60+60	1.69	1.69	5.06	5.06	-	-	3.6	13.5	13.8	950	3740	3920	17.0	16.3	15.6
		20+20+60+71	1.58	1.58	4.74	5.61	-	-	3.6	13.5	13.8	950	3730	3920	17.0	16.2	15.6
		20+20+71+71	1.48	1.48	5.27	5.27	-	-	3.6	13.5	13.8	950	3730	3920	17.0	16.2	15.6
		20+25+25+25	2.78	3.47	3.47	3.47	-	-	3.6	13.2	13.8	950	3620	3920	16.5	15.8	15.1
		20+25+25+35	2.57	3.21	3.21	4.50	-	-	3.6	13.5	13.8	950	3770	3920	17.2	16.4	15.7
		20+25+25+50	2.25	2.81	2.81	5.63	-	-	3.6	13.5	13.8	950	3760	3920	17.1	16.4	15.7
		20+25+25+60	2.08	2.60	2.60	6.23	-	-	3.6	13.5	13.8	950	3750	3920	17.1	16.3	15.6
		20+25+25+71	1.91	2.39	2.39	6.80	-	-	3.6	13.5	13.8	950	3740	3920	17.0	16.3	15.6
		20+25+35+35	2.35	2.93	4.11	4.11	-	-	3.6	13.5	13.8	950	3760	3920	17.1	16.4	15.7
		20+25+35+50	2.08	2.60	3.63	5.19	-	-	3.6	13.5	13.8	950	3750	3920	17.1	16.3	15.6
		20+25+35+60	1.93	2.41	3.38	5.79	-	-	3.6	13.5	13.8	950	3740	3920	17.0	16.3	15.6
		20+25+35+71	1.79	2.24	3.13	6.35	-	-	3.6	13.5	13.8	950	3740	3920	17.0	16.3	15.6
		20+25+50+50	1.86	2.33	4.66	4.66	-	-	3.6	13.5	13.8	950	3740	3920	17.0	16.3	15.6
		20+25+50+60	1.74	2.18	4.35	5.23	-	-	3.6	13.5	13.8	950	3740	3920	17.0	16.3	15.6
		20+25+50+71	1.63	2.03	4.07	5.77	-	-	3.6	13.5	13.8	950	3730	3920	17.0	16.2	15.6
		20+25+60+60	1.64	2.05	4.91	4.91	-	-	3.6	13.5	13.8	950	3730	3920	17.0	16.2	15.6
		20+25+60+71	1.53	1.92	4.60	5.45	-	-	3.6	13.5	13.8	950	3730	3920	17.0	16.2	15.6
		20+25+71+71	1.44	1.80	5.13	5.13	-	-	3.6	13.5	13.8	950	3720	3920	16.9	16.2	15.5
		20+35+35+35	2.16	3.78	3.78	3.78	-	-	3.6	13.5	13.8	950	3750	3920	17.1	16.3	15.6
		20+35+35+50	1.93	3.38	3.38	4.82	-	-	3.6	13.5	13.8	950	3740	3920	17.0	16.3	15.6
		20+35+35+60	1.80	3.15	3.15	5.40	-	-	3.6	13.5	13.8	950	3740	3920	17.0	16.3	15.6
		20+35+35+71	1.68	2.93	2.93	5.95	-	-	3.6	13.5	13.8	950	3740	3920	17.0	16.3	15.6
		20+35+50+50	1.74	3.05	4.35	4.35	-	-	3.6	13.5	13.8	950	3740	3920	17.0	16.3	15.6
		20+35+50+60	1.64	2.86	4.09	4.91	-	-	3.6	13.5	13.8	950	3730	3920	17.0	16.2	15.6
		20+35+50+71	1.53	2.68	3.84	5.45	-	-	3.6	13.5	13.8	950	3730	3920	17.0	16.2	15.6
		20+35+60+60	1.54	2.70	4.63	4.63	-	-	3.6	13.5	13.8	950	3730	3920	17.0	16.2	15.6
		20+35+60+71	1.45	2.54	4.35	5.15	-	-	3.6	13.5	13.8	950	3720	3920	16.9	16.2	15.5
		20+50+50+50	1.59	3.97	3.97	3.97	-	-	3.6	13.5	13.8	950	3730	3920	17.0	16.2	15.6
		20+50+50+60	1.50	3.75	3.75	4.50	-	-	3.6	13.5	13.8	950	3730	3920	17.0	16.2	15.6
		20+50+50+71	1.41	3.53	3.53	5.02	-	-	3.6	13.5	13.8	950	3720	3920	16.9	16.2	15.5
		20+50+60+60	1.42	3.55	4.26	4.26	-	-	3.6	13.5	13.8	950	3720	3920	16.9	16.2	15.5
		25+25+25+25	3.38	3.38	3.38	3.38	-	-	3.6	13.5	13.8	950	3770	3920	17.2	16.4	15.7
		25+25+25+35	3.07	3.07	3.07	4.30	-	-	3.6	13.5	13.8	950	3760	3920	17.1	16.4	15.7
		25+25+25+50	2.70	2.70	2.70	5.40	-	-	3.6	13.5	13.8	950	3750	3920	17.1	16.3	15.6
		25+25+25+60	2.50	2.50	2.50	6.00	-	-	3.6	13.5	13.8	950	3750	3920	17.1	16.3	15.6
		25+25+25+71	2.31	2.31	2.31	6.57	-	-	3.6	13.5	13.8	950	3740	3920	17.0	16.3	15.6

MULTI-SPLIT SYSTEM

Indoor unit combination			Heating capacity (kW)									Power consumption(W)			Standard current(A)		
			Room heating capacity						Total capacity			Min.	Standard	Max.	220V	230V	240V
			A	B	C	D	E	F	Min.	Standard	Max.						
Heating operation	4 room	25+25+35+35	2.81	2.81	3.94	3.94	-	-	3.6	13.5	13.8	950	3760	3920	17.1	16.4	15.7
		25+25+35+50	2.50	2.50	3.50	5.00	-	-	3.6	13.5	13.8	950	3750	3920	17.1	16.3	15.6
		25+25+35+60	2.33	2.33	3.26	5.59	-	-	3.6	13.5	13.8	950	3740	3920	17.0	16.3	15.6
		25+25+35+71	2.16	2.16	3.03	6.14	-	-	3.6	13.5	13.8	950	3740	3920	17.0	16.3	15.6
		25+25+50+50	2.25	2.25	4.50	4.50	-	-	3.6	13.5	13.8	950	3740	3920	17.0	16.3	15.6
		25+25+50+60	2.11	2.11	4.22	5.06	-	-	3.6	13.5	13.8	950	3740	3920	17.0	16.3	15.6
		25+25+50+71	1.97	1.97	3.95	5.61	-	-	3.6	13.5	13.8	950	3730	3920	17.0	16.2	15.6
		25+25+60+60	1.99	1.99	4.76	4.76	-	-	3.6	13.5	13.8	950	3730	3920	17.0	16.2	15.6
		25+25+60+71	1.86	1.86	4.48	5.30	-	-	3.6	13.5	13.8	950	3730	3920	17.0	16.2	15.6
		25+25+71+71	1.76	1.76	4.99	4.99	-	-	3.6	13.5	13.8	950	3720	3920	16.9	16.2	15.5
		25+35+35+35	2.60	3.63	3.63	3.63	-	-	3.6	13.5	13.8	950	3750	3920	17.1	16.3	15.6
		25+35+35+50	2.33	3.26	3.26	4.66	-	-	3.6	13.5	13.8	950	3740	3920	17.0	16.3	15.6
		25+35+35+60	2.18	3.05	3.05	5.23	-	-	3.6	13.5	13.8	950	3740	3920	17.0	16.3	15.6
		25+35+35+71	2.03	2.85	2.85	5.77	-	-	3.6	13.5	13.8	950	3730	3920	17.0	16.2	15.6
		25+35+50+50	2.11	2.95	4.22	4.22	-	-	3.6	13.5	13.8	950	3740	3920	17.0	16.3	15.6
		25+35+50+60	1.99	2.78	3.97	4.76	-	-	3.6	13.5	13.8	950	3730	3920	17.0	16.2	15.6
		25+35+50+71	1.86	2.61	3.73	5.30	-	-	3.6	13.5	13.8	950	3730	3920	17.0	16.2	15.6
		25+35+60+60	1.88	2.63	4.50	4.50	-	-	3.6	13.5	13.8	950	3730	3920	17.0	16.2	15.6
		25+35+60+71	1.77	2.47	4.24	5.02	-	-	3.6	13.5	13.8	950	3720	3920	16.9	16.2	15.5
		25+50+50+50	1.93	3.86	3.86	3.86	-	-	3.6	13.5	13.8	950	3730	3920	17.0	16.2	15.6
		25+50+50+60	1.82	3.65	3.65	4.38	-	-	3.6	13.5	13.8	950	3720	3920	16.9	16.2	15.5
		25+50+60+60	1.73	3.46	4.15	4.15	-	-	3.6	13.5	13.8	950	3720	3920	16.9	16.2	15.5
		35+35+35+35	3.38	3.38	3.38	3.38	-	-	3.6	13.5	13.8	950	3740	3920	17.0	16.3	15.6
		35+35+35+50	3.05	3.05	3.05	4.35	-	-	3.6	13.5	13.8	950	3740	3920	17.0	16.3	15.6
		35+35+35+60	2.86	2.86	2.86	4.91	-	-	3.6	13.5	13.8	950	3730	3920	17.0	16.2	15.6
		35+35+35+71	2.68	2.68	2.68	5.45	-	-	3.6	13.5	13.8	950	3730	3920	17.0	16.2	15.6
		35+35+50+50	2.78	2.78	3.97	3.97	-	-	3.6	13.5	13.8	950	3730	3920	17.0	16.2	15.6
		35+35+50+60	2.63	2.63	3.75	4.50	-	-	3.6	13.5	13.8	950	3730	3920	17.0	16.2	15.6
		35+35+50+71	2.47	2.47	3.53	5.02	-	-	3.6	13.5	13.8	950	3720	3920	16.9	16.2	15.5
		35+35+60+60	2.49	2.49	4.26	4.26	-	-	3.6	13.5	13.8	950	3720	3920	16.9	16.2	15.5
		35+50+50+50	2.55	3.65	3.65	3.65	-	-	3.6	13.5	13.8	950	3720	3920	16.9	16.2	15.5
		35+50+50+60	2.42	3.46	3.46	4.15	-	-	3.6	13.5	13.8	950	3720	3920	16.9	16.2	15.5
	5 room	20+20+20+20+20	2.70	2.70	2.70	2.70	2.70	-	4.0	13.5	13.8	1050	3450	3470	15.7	15.0	14.4
		20+20+20+20+25	2.57	2.57	2.57	2.57	3.21	-	4.0	13.5	13.8	1050	3450	3470	15.7	15.0	14.4
		20+20+20+20+35	2.35	2.35	2.35	2.35	4.11	-	4.0	13.5	13.8	1050	3440	3470	15.7	15.0	14.3
		20+20+20+20+50	2.08	2.08	2.08	2.08	5.19	-	4.0	13.5	13.8	1050	3430	3470	15.6	14.9	14.3
		20+20+20+20+60	1.93	1.93	1.93	1.93	5.79	-	4.0	13.5	13.8	1050	3430	3470	15.6	14.9	14.3
		20+20+20+20+71	1.79	1.79	1.79	1.79	6.35	-	4.0	13.5	13.8	1050	3420	3470	15.6	14.9	14.3
		20+20+20+25+25	2.45	2.45	2.45	3.07	3.07	-	4.0	13.5	13.8	1050	3450	3470	15.7	15.0	14.4
		20+20+20+25+35	2.25	2.25	2.25	2.81	3.94	-	4.0	13.5	13.8	1050	3440	3470	15.7	15.0	14.3
		20+20+20+25+50	2.00	2.00	2.00	2.50	5.00	-	4.0	13.5	13.8	1050	3430	3470	15.6	14.9	14.3
		20+20+20+25+60	1.86	1.86	1.86	2.33	5.59	-	4.0	13.5	13.8	1050	3420	3470	15.6	14.9	14.3
		20+20+20+25+71	1.73	1.73	1.73	2.16	6.14	-	4.0	13.5	13.8	1050	3420	3470	15.6	14.9	14.3
		20+20+20+35+35	2.08	2.08	2.08	3.63	3.63	-	4.0	13.5	13.8	1050	3430	3470	15.6	14.9	14.3
		20+20+20+35+50	1.86	1.86	1.86	3.26	4.66	-	4.0	13.5	13.8	1050	3420	3470	15.6	14.9	14.3
		20+20+20+35+60	1.74	1.74	1.74	3.05	5.23	-	4.0	13.5	13.8	1050	3420	3470	15.6	14.9	14.3
		20+20+20+35+71	1.63	1.63	1.63	2.85	5.77	-	4.0	13.5	13.8	1050	3410	3470	15.5	14.8	14.2
		20+20+20+50+50	1.69	1.69	1.69	4.22	4.22	-	4.0	13.5	13.8	1050	3410	3470	15.5	14.8	14.2
		20+20+20+50+60	1.59	1.59	1.59	3.97	4.76	-	4.0	13.5	13.8	1050	3410	3470	15.5	14.8	14.2
		20+20+20+60+60	1.50	1.50	1.50	4.50	4.50	-	4.0	13.5	13.8	1050	3400	3470	15.5	14.8	14.2
		20+20+20+60+71	1.41	1.41	1.41	4.24	5.02	-	4.0	13.5	13.8	1050	3390	3470	15.4	14.8	14.1
		20+20+25+25+25	2.35	2.35	2.93	2.93	2.93	-	4.0	13.5	13.8	1050	3440	3470	15.7	15.0	14.3
		20+20+25+25+35	2.16	2.16	2.70	2.70	3.78	-	4.0	13.5	13.8	1050	3440	3470	15.7	15.0	14.3
		20+20+25+25+50	1.93	1.93	2.41	2.41	4.82	-	4.0	13.5	13.8	1050	3430	3470	15.6	14.9	14.3
		20+20+25+25+60	1.80	1.80	2.25	2.25	5.40	-	4.0	13.5	13.8	1050	3420	3470	15.6	14.9	14.3
		20+20+25+25+71	1.68	1.68	2.10	2.10	5.95	-	4.0	13.5	13.8	1050	3410	3470	15.5	14.8	14.2
		20+20+25+35+35	2.00	2.00	2.50	3.50	3.50	-	4.0	13.5	13.8	1050	3430	3470	15.6	14.9	14.3
		20+20+25+35+50	1.80	1.80	2.25	3.15	4.50	-	4.0	13.5	13.8	1050	3420	3470	15.6	14.9	14.3
		20+20+25+35+60	1.69	1.69	2.11	2.95	5.06	-	4.0	13.5	13.8	1050	3410	3470	15.5	14.8	14.2
		20+20+25+35+71	1.58	1.58	1.97	2.76	5.61	-	4.0	13.5	13.8	1050	3410	3470	15.5	14.8	14.2
		20+20+25+50+50	1.64	1.64	2.05	4.09	4.09	-	4.0	13.5	13.8	1050	3410	3470	15.5	14.8	14.2
		20+20+25+50+60	1.54	1.54	1.93	3.86	4.63	-	4.0	13.5	13.8	1050	3410	3470	15.5	14.8	14.2
		20+20+25+50+71	1.45	1.45	1.81	3.63	5.15	-	4.0	13.5	13.8	1050	3400	3470	15.5	14.8	14.2
		20+20+25+60+60	1.46	1.46	1.82	4.38	4.38	-	4.0	13.5	13.8	1050	3400	3470	15.5	14.8	14.2
		20+20+35+35+35	1.86	1.86	3.26	3.26	3.26	-	4.0	13.5	13.8	1050	3420	3470	15.6	14.9	14.3
		20+20+35+35+50	1.69	1.69	2.95	2.95	4.22	-	4.0	13.5	13.8	1050	3410	3470	15.5	14.8	14.2
		20+20+35+35+60	1.59	1.59	2.78	2.78	4.76	-	4.0	13.5	13.8	1050	3410	3470	15.5	14.8	14.2
		20+20+35+35+71	1.49	1.49	2.61	2.61	5.30	-	4.0	13.5	13.8	1050	3400	3470	15.5	14.8	14.2
		20+20+35+50+50	1.54	1.54	2.70	3.86	3.86	-	4.0	13.5	13.8	1050	3410	3470	15.5	14.8	14.2
		20+20+35+50+60	1.46	1.46	2.55	3.65	4.38	-	4.0	13.5	13.8	1050	3400	3470	15.5	14.8	14.2
		20+20+35+60+60	1.38	1.38	2.42	4.15	4.15	-	4.0	13.5	13.8	1050	3390	3470	15.4	14.8	14.1
		20+20+50+50+50	1.42	1.42	3.55	3.55	3.55	-	4.0	13.5	13.8	1050	3390	3470	15.4	14.8	14.1
		20+25+25+25+25	2.25	2.81	2.81	2.81	2.81	-	4.0	13.5	13.8	1050	3440	3470	15.7	15.0	14.3
		20+25+25+25+35	2.08	2.60	2.60	2.60	3.63	-	4.0	13.5	13.8	1050	3430	3470	15.6	14.9	14.3
		20+25+25+25+50	1.86	2.33	2.33	2.33	4.66	-	4.0	13.5	13.8	1050	3420	3470	15.6	14.9	14.3
		20+25+25+25+60	1.74	2.18	2.18	2.18	5.23	-	4.0	13.5	13.8	1050	3420	3470	15.6	14.9	14.3
		20+25+25+25+71	1.63	2.03	2.03	2.03	5.77	-	4.0	13.5	13.8	1050	3410	3470	15.5	14.8	14.2
		20+25+25+35+35	1.93	2.41	2.41	3.38	3.38	-	4.0	13.5	13.8	1050	3430	3470	15.6	14.9	14.3
		20+25+25+35+50	1.74	2.18	2.18	3.05	4.35	-	4.0	13.5	13.8	1050	3420	3470	15.6	14.9	14.3
		20+25+25+35+60	1.64	2.05	2.05	2.86	4.91	-	4.0	13.5	13.8	1050	3410	3470	15.5	14.8	14.2
		20+25+25+35+71	1.53	1.92	1.92	2.68	5.45	-	4.0	13.5	13.8	1050	3410	3470	15.5	14.8	14.2
		20+25+25+50+50	1.59	1.99	1.99	3.97	3.97	-	4.0	13.5	13.8	1050	3410	3470	15.5	14.8	14.2
		20+25+25+50+60	1.50	1.88	1.88	3.75	4.50	-	4.0	13.5	13.8	1050	3400	3470	15.5	14.8	14.2
		20+25+25+50+71	1.41	1.77	1.77	3.53	5.02	-	4.0	13.5	13.8	1050	3390	3470	15.4	14.8	14.1
		20+25+25+60+60	1.42	1.78	1.78	4.26	4.26	-	4.0	13.5	13.8	1050	3390	3470	15.4	14.8	14.1
		20+25+35+35+35	1.80	2.25	3.15	3.15	3.15	-	4.0	13.5	13.8	1050	3420	3470	15.6	14.9	14.3
		20+25+35+35+50	1.64	2.05	2.86	2.86	4.09	-	4.0	13.5	13.8	1050	3410	3470	15.5	14.8	14.2
		20+25+35+35+60	1.54	1.93	2.70	2.70	4.63	-	4.0	13.5	13.8	1050	3410	3470	15.5	14.8	14.2
		20+25+35+35+71	1.45	1.81	2.54	2.54	5.15	-	4.0	13.5	13.8	1050	3400	3470	15.5	14.8	14.2
		20+25+35+50+50	1.50	1.88	2.63	3.75	3.75	-	4.0	13.5	13.8	1050	3400	3470	15.5	14.8	14.2
		20+25+35+50+60	1.42	1.78	2.49	3.55	4.26	-	4.0	13.5	13.8	1050	3390	3470	15.4	14.8	14.1
		20+25+50+50+50	1.38	1.73	3.46	3.46	3.46	-	4.0	13.5	13.8	1050	3390	3470	15.4	14.8	14.1
		20+35+35+35+35	1.69	2.95	2.95	2.95	2.95	-	4.0	13.5	13.8	1050	3410	3470	15.5	14.8	14.2
		20+35+35+35+50	1.54	2.70	2.70	2.70	3.86	-	4.0	13.5	13.8	1050	3410	3470	15.5	14.8	14.2

Indoor unit combination		Heating capacity (kW)									Power consumption(W)			Standard current(A)		
		Room heating capacity						Total capacity								
		A	B	C	D	E	F	Min.	Standard	Max.	Min.	Standard	Max.	220V	230V	240V
5 room	20+35+35+35+60	1.46	2.55	2.55	2.55	4.38	-	4.0	13.5	13.8	1050	3400	3470	15.5	14.8	14.2
	20+35+35+50+50	1.42	2.49	2.49	3.55	3.55	-	4.0	13.5	13.8	1050	3390	3470	15.4	14.8	14.1
	25+25+25+25+25	2.70	2.70	2.70	2.70	2.70	-	4.0	13.5	13.8	1050	3440	3470	15.7	15.0	14.3
	25+25+25+25+35	2.50	2.50	2.50	2.50	3.50	-	4.0	13.5	13.8	1050	3430	3470	15.6	14.9	14.3
	25+25+25+25+50	2.25	2.25	2.25	2.25	4.50	-	4.0	13.5	13.8	1050	3420	3470	15.6	14.9	14.3
	25+25+25+25+60	2.11	2.11	2.11	2.11	5.06	-	4.0	13.5	13.8	1050	3410	3470	15.5	14.8	14.2
	25+25+25+25+71	1.97	1.97	1.97	1.97	5.61	-	4.0	13.5	13.8	1050	3410	3470	15.5	14.8	14.2
	25+25+25+35+35	2.33	2.33	2.33	3.26	3.26	-	4.0	13.5	13.8	1050	3420	3470	15.6	14.9	14.3
	25+25+25+35+50	2.11	2.11	2.11	2.95	4.22	-	4.0	13.5	13.8	1050	3410	3470	15.5	14.8	14.2
	25+25+25+35+60	1.99	1.99	1.99	2.78	4.76	-	4.0	13.5	13.8	1050	3410	3470	15.5	14.8	14.2
	25+25+25+35+71	1.86	1.86	1.86	2.61	5.30	-	4.0	13.5	13.8	1050	3400	3470	15.5	14.8	14.2
	25+25+25+50+50	1.93	1.93	1.93	3.86	3.86	-	4.0	13.5	13.8	1050	3410	3470	15.5	14.8	14.2
	25+25+25+50+60	1.82	1.82	1.82	3.65	4.38	-	4.0	13.5	13.8	1050	3400	3470	15.5	14.8	14.2
	25+25+25+60+60	1.73	1.73	1.73	4.15	4.15	-	4.0	13.5	13.8	1050	3390	3470	15.4	14.8	14.1
	25+25+35+35+35	2.18	2.18	3.05	3.05	3.05	-	4.0	13.5	13.8	1050	3420	3470	15.6	14.9	14.3
	25+25+35+35+50	1.99	1.99	2.78	2.78	3.97	-	4.0	13.5	13.8	1050	3410	3470	15.5	14.8	14.2
	25+25+35+35+60	1.88	1.88	2.63	2.63	4.50	-	4.0	13.5	13.8	1050	3400	3470	15.5	14.8	14.2
	25+25+35+35+71	1.77	1.77	2.47	2.47	5.02	-	4.0	13.5	13.8	1050	3390	3470	15.4	14.8	14.1
	25+25+35+50+50	1.82	1.82	2.55	3.65	3.65	-	4.0	13.5	13.8	1050	3400	3470	15.5	14.8	14.2
	25+25+35+50+60	1.73	1.73	2.42	3.46	4.15	-	4.0	13.5	13.8	1050	3390	3470	15.4	14.8	14.1
	25+35+35+35+35	2.05	2.86	2.86	2.86	2.86	-	4.0	13.5	13.8	1050	3410	3470	15.5	14.8	14.2
	25+35+35+35+50	1.88	2.63	2.63	2.63	3.75	-	4.0	13.5	13.8	1050	3400	3470	15.5	14.8	14.2
	25+35+35+35+60	1.78	2.49	2.49	2.49	4.26	-	4.0	13.5	13.8	1050	3390	3470	15.4	14.8	14.1
	25+35+35+50+50	1.73	2.42	2.42	3.46	3.46	-	4.0	13.5	13.8	1050	3390	3470	15.4	14.8	14.1
	35+35+35+35+35	2.70	2.70	2.70	2.70	2.70	-	4.0	13.5	13.8	1050	3410	3470	15.5	14.8	14.2
	35+35+35+35+50	2.49	2.49	2.49	2.49	3.55	-	4.0	13.5	13.8	1050	3390	3470	15.4	14.8	14.1
6 room	20+20+20+20+20+20	2.25	2.25	2.25	2.25	2.25	2.25	4.5	13.5	13.8	1150	3330	3420	15.2	14.5	13.9
	20+20+20+20+20+25	2.16	2.16	2.16	2.16	2.16	2.70	4.5	13.5	13.8	1150	3330	3420	15.2	14.5	13.9
	20+20+20+20+20+35	2.00	2.00	2.00	2.00	2.00	3.50	4.5	13.5	13.8	1150	3330	3420	15.2	14.5	13.9
	20+20+20+20+20+50	1.80	1.80	1.80	1.80	1.80	4.50	4.5	13.5	13.8	1150	3320	3420	15.1	14.4	13.8
	20+20+20+20+20+60	1.69	1.69	1.69	1.69	1.69	5.06	4.5	13.5	13.8	1150	3320	3420	15.1	14.4	13.8
	20+20+20+20+20+71	1.58	1.58	1.58	1.58	1.58	5.61	4.5	13.5	13.8	1150	3310	3420	15.1	14.4	13.8
	20+20+20+20+25+25	2.08	2.08	2.08	2.08	2.60	2.60	4.5	13.5	13.8	1150	3330	3420	15.2	14.5	13.9
	20+20+20+20+25+35	1.93	1.93	1.93	1.93	2.41	3.38	4.5	13.5	13.8	1150	3320	3420	15.1	14.4	13.8
	20+20+20+20+25+50	1.74	1.74	1.74	1.74	2.18	4.35	4.5	13.5	13.8	1150	3320	3420	15.1	14.4	13.8
	20+20+20+20+25+60	1.64	1.64	1.64	1.64	2.05	4.91	4.5	13.5	13.8	1150	3320	3420	15.1	14.4	13.8
	20+20+20+20+25+71	1.53	1.53	1.53	1.53	1.92	5.45	4.5	13.5	13.8	1150	3310	3420	15.1	14.4	13.8
	20+20+20+20+35+35	1.80	1.80	1.80	1.80	3.15	3.15	4.5	13.5	13.8	1150	3320	3420	15.1	14.4	13.8
	20+20+20+20+35+50	1.64	1.64	1.64	1.64	2.86	4.09	4.5	13.5	13.8	1150	3320	3420	15.1	14.4	13.8
	20+20+20+20+35+60	1.54	1.54	1.54	1.54	2.70	4.63	4.5	13.5	13.8	1150	3310	3420	15.1	14.4	13.8
	20+20+20+20+35+71	1.45	1.45	1.45	1.45	2.54	5.15	4.5	13.5	13.8	1150	3310	3420	15.1	14.4	13.8
	20+20+20+20+50+50	1.50	1.50	1.50	1.50	3.75	3.75	4.5	13.5	13.8	1150	3310	3420	15.1	14.4	13.8
	20+20+20+20+50+60	1.42	1.42	1.42	1.42	3.55	4.26	4.5	13.5	13.8	1150	3310	3420	15.1	14.4	13.8
	20+20+20+25+25+25	2.00	2.00	2.00	2.50	2.50	2.50	4.5	13.5	13.8	1150	3330	3420	15.2	14.5	13.9
	20+20+20+25+25+35	1.86	1.86	1.86	2.33	2.33	3.26	4.5	13.5	13.8	1150	3320	3420	15.1	14.4	13.8
	20+20+20+25+25+50	1.69	1.69	1.69	2.11	2.11	4.22	4.5	13.5	13.8	1150	3320	3420	15.1	14.4	13.8
	20+20+20+25+25+60	1.59	1.59	1.59	1.99	1.99	4.76	4.5	13.5	13.8	1150	3310	3420	15.1	14.4	13.8
	20+20+20+25+25+71	1.49	1.49	1.49	1.86	1.86	5.30	4.5	13.5	13.8	1150	3310	3420	15.1	14.4	13.8
	20+20+20+25+35+35	1.74	1.74	1.74	2.18	3.05	3.05	4.5	13.5	13.8	1150	3320	3420	15.1	14.4	13.8
	20+20+20+25+35+50	1.59	1.59	1.59	1.99	2.78	3.97	4.5	13.5	13.8	1150	3310	3420	15.1	14.4	13.8
	20+20+20+25+35+60	1.50	1.50	1.50	1.88	2.63	4.50	4.5	13.5	13.8	1150	3310	3420	15.1	14.4	13.8
	20+20+20+25+50+50	1.46	1.46	1.46	1.82	3.65	3.65	4.5	13.5	13.8	1150	3310	3420	15.1	14.4	13.8
	20+20+20+25+50+60	1.38	1.38	1.38	1.73	3.46	4.15	4.5	13.5	13.8	1150	3310	3420	15.1	14.4	13.8
	20+20+20+35+35+35	1.64	1.64	1.64	2.86	2.86	2.86	4.5	13.5	13.8	1150	3320	3420	15.1	14.4	13.8
	20+20+20+35+35+50	1.50	1.50	1.50	2.63	2.63	3.75	4.5	13.5	13.8	1150	3310	3420	15.1	14.4	13.8
	20+20+20+35+35+60	1.42	1.42	1.42	2.49	2.49	4.26	4.5	13.5	13.8	1150	3310	3420	15.1	14.4	13.8
	20+20+20+35+50+50	1.38	1.38	1.38	2.42	3.46	3.46	4.5	13.5	13.8	1150	3310	3420	15.1	14.4	13.8
	20+20+25+25+25+25	1.93	1.93	2.41	2.41	2.41	2.41	4.5	13.5	13.8	1150	3320	3420	15.1	14.4	13.8
	20+20+25+25+25+35	1.80	1.80	2.25	2.25	2.25	3.15	4.5	13.5	13.8	1150	3320	3420	15.1	14.4	13.8
	20+20+25+25+25+50	1.64	1.64	2.05	2.05	2.05	4.09	4.5	13.5	13.8	1150	3320	3420	15.1	14.4	13.8
	20+20+25+25+25+60	1.54	1.54	1.93	1.93	1.93	4.63	4.5	13.5	13.8	1150	3310	3420	15.1	14.4	13.8
	20+20+25+25+25+71	1.45	1.45	1.81	1.81	1.81	5.15	4.5	13.5	13.8	1150	3310	3420	15.1	14.4	13.8
	20+20+25+25+35+35	1.69	1.69	2.11	2.11	2.95	2.95	4.5	13.5	13.8	1150	3320	3420	15.1	14.4	13.8
	20+20+25+25+35+50	1.54	1.54	1.93	1.93	2.70	3.86	4.5	13.5	13.8	1150	3310	3420	15.1	14.4	13.8
	20+20+25+25+35+60	1.46	1.46	1.82	1.82	2.55	4.38	4.5	13.5	13.8	1150	3310	3420	15.1	14.4	13.8
	20+20+25+25+50+50	1.42	1.42	1.78	1.78	3.55	3.55	4.5	13.5	13.8	1150	3310	3420	15.1	14.4	13.8
	20+20+25+35+35+35	1.59	1.59	1.99	2.78	2.78	2.78	4.5	13.5	13.8	1150	3310	3420	15.1	14.4	13.8
	20+20+25+35+35+50	1.46	1.46	1.82	2.55	2.55	3.65	4.5	13.5	13.8	1150	3310	3420	15.1	14.4	13.8
	20+20+25+35+35+60	1.38	1.38	1.73	2.42	2.42	4.15	4.5	13.5	13.8	1150	3310	3420	15.1	14.4	13.8
	20+20+35+35+35+35	1.50	1.50	2.63	2.63	2.63	2.63	4.5	13.5	13.8	1150	3310	3420	15.1	14.4	13.8
	20+20+35+35+35+50	1.38	1.38	2.42	2.42	2.42	3.46	4.5	13.5	13.8	1150	3310	3420	15.1	14.4	13.8
	20+25+25+25+25+25	1.86	2.33	2.33	2.33	2.33	2.33	4.5	13.5	13.8	1150	3320	3420	15.1	14.4	13.8
	20+25+25+25+25+35	1.74	2.18	2.18	2.18	2.18	3.05	4.5	13.5	13.8	1150	3320	3420	15.1	14.4	13.8
	20+25+25+25+25+50	1.59	1.99	1.99	1.99	1.99	3.97	4.5	13.5	13.8	1150	3310	3420	15.1	14.4	13.8
	20+25+25+25+25+60	1.50	1.88	1.88	1.88	1.88	4.50	4.5	13.5	13.8	1150	3310	3420	15.1	14.4	13.8
	20+25+25+25+25+71	1.41	1.77	1.77	1.77	1.77	5.02	4.5	13.5	13.8	1150	3310	3420	15.1	14.4	13.8
	20+25+25+25+35+35	1.64	2.05	2.05	2.05	2.86	2.86	4.5	13.5	13.8	1150	3320	3420	15.1	14.4	13.8
	20+25+25+25+35+50	1.50	1.88	1.88	1.88	2.63	3.75	4.5	13.5	13.8	1150	3310	3420	15.1	14.4	13.8
	20+25+25+25+35+60	1.42	1.78	1.78	1.78	2.49	4.26	4.5	13.5	13.8	1150	3310	3420	15.1	14.4	13.8
	20+25+25+25+50+50	1.38	1.73	1.73	1.73	3.46	3.46	4.5	13.5	13.8	1150	3310	3420	15.1	14.4	13.8
	20+25+25+35+35+35	1.54	1.93	1.93	2.70	2.70	2.70	4.5	13.5	13.8	1150	3310	3420	15.1	14.4	13.8
	20+25+25+35+35+50	1.42	1.78	1.78	2.49	2.49	3.55	4.5	13.5	13.8	1150	3310	3420	15.1	14.4	13.8
	20+25+35+35+35+35	1.46	1.82	2.55	2.55	2.55	2.55	4.5	13.5	13.8	1150	3310	3420	15.1	14.4	13.8
	20+35+35+35+35+35	1.38	2.42	2.42	2.42	2.42	2.42	4.5	13.5	13.8	1150	3310	3420	15.1	14.4	13.8
	25+25+25+25+25+25	2.25	2.25	2.25	2.25	2.25	2.25	4.5	13.5	13.8	1150	3320	3420	15.1	14.4	13.8
	25+25+25+25+25+35	2.11	2.11	2.11	2.11	2.11	2.95	4.5	13.5	13.8	1150	3320	3420	15.1	14.4	13.8
	25+25+25+25+25+50	1.93	1.93	1.93	1.93	1.93	3.86	4.5	13.5	13.8	1150	3310	3420	15.1	14.4	13.8
	25+25+25+25+25+60	1.82	1.82	1.82	1.82	1.82	4.38	4.5	13.5	13.8	1150	3310	3420	15.1	14.4	13.8
	25+25+25+25+35+35	1.99	1.99	1.99	1.99	2.78	2.78	4.5	13.5	13.8	1150	3310	3420	15.1	14.4	13.8
	25+25+25+25+35+50	1.82	1.82	1.82	1.82	2.55	3.65	4.5	13.5	13.8	1150	3310	3420	15.1	14.4	13.8
	25+25+25+25+35+60	1.73	1.73	1.73	1.73	2.42	4.15	4.5	13.5	13.8	1150	3310	3420	15.1	14.4	13.8
	25+25+25+35+35+35	1.88	1.88	1.88	2.63	2.63	2.63	4.5	13.5	13.8	1150	3310	3420	15.1	14.4	13.8
	25+25+25+35+35+50	1.73	1.73	1.73	2.42	2.42	3.46	4.5	13.5	13.8	1150	3310	3420	15.1	14.4	13.8
	25+25+35+35+35+35	1.78	1.78	2.49	2.49	2.49	2.49	4.5	13.5	13.8	1150	3310	3420	15.1	14.4	13.8

Heating operation

MULTI-SPLIT SYSTEM

Indoor unit combination			Cooling capacity (kW)									Power consumption(W)			Standard current(A)		
			Room cooling capacity						Total capacity			Min.	Standard	Max.	220V	230V	240V
			A	B	C	D	E	F	Min.	Standard	Max.						
Cooling operation	1 room	20	2.0	-	-	-	-	-	1.8	2.0	2.7	650	780	1100	3.6	3.4	3.3
		25	2.5	-	-	-	-	-	1.8	2.5	3.2	650	1000	1350	4.6	4.4	4.2
		35	3.5	-	-	-	-	-	1.8	3.5	3.7	650	1500	1600	6.9	6.6	6.3
		50	5.0	-	-	-	-	-	1.8	5.0	5.8	650	2150	2500	9.9	9.4	9.0
		60	6.0	-	-	-	-	-	1.8	6.0	6.7	650	2720	3000	12.5	11.9	11.4
		71	7.1	-	-	-	-	-	1.8	7.1	7.2	650	3250	3080	14.9	14.3	13.7
	2 room	20+20	2.00	2.00	-	-	-	-	3.0	4.0	5.4	740	960	1460	4.4	4.2	4.0
		20+25	2.00	2.50	-	-	-	-	3.0	4.5	5.9	740	1100	1820	5.1	4.8	4.6
		20+35	2.00	3.50	-	-	-	-	3.0	5.5	6.4	740	1500	2020	6.9	6.6	6.3
		20+50	2.00	5.00	-	-	-	-	3.0	7.0	8.5	740	2290	2820	10.5	10.1	9.6
		20+60	2.00	6.00	-	-	-	-	3.0	8.0	9.4	740	2660	3360	12.2	11.7	11.2
		20+71	2.00	7.10	-	-	-	-	3.0	9.1	9.9	740	3100	3780	14.1	13.5	12.9
		25+25	2.50	2.50	-	-	-	-	3.0	5.0	6.8	740	1420	2200	6.5	6.2	6.0
		25+35	2.50	3.50	-	-	-	-	3.0	6.0	6.9	740	1810	2320	8.3	7.9	7.6
		25+50	2.50	5.00	-	-	-	-	3.0	7.5	9.0	740	2470	3220	11.3	10.8	10.4
		25+60	2.50	6.00	-	-	-	-	3.0	8.5	9.4	740	2810	3360	12.9	12.3	11.8
		25+71	2.53	7.17					3.0	9.7	10.4	740	3350	4020	15.4	14.7	14.1
		35+35	3.50	3.50	-	-	-	-	3.0	7.0	7.4	740	2290	2820	10.5	10.1	9.6
		35+50	3.50	5.00	-	-	-	-	3.0	8.5	9.5	740	2810	3620	12.9	12.3	11.8
		35+60	3.50	6.00	-	-	-	-	3.0	9.5	10.4	740	3280	3990	15.1	14.4	13.8
		35+71	3.50	7.10	-	-	-	-	3.0	10.6	10.9	740	3760	4250	17.1	16.3	15.7
		50+50	5.00	5.00	-	-	-	-	3.0	10.0	10.8	740	3520	4050	16.2	15.5	14.8
		50+60	5.00	6.00	-	-	-	-	3.0	11.0	12.0	740	3870	4410	17.8	17.0	16.3
		50+71	4.96	7.04	-	-	-	-	3.0	12.0	12.0	740	4410	4410	20.0	19.2	18.4
		60+60	6.00	6.00	-	-	-	-	3.0	12.0	12.0	740	4410	4410	20.2	19.4	18.6
		60+71	5.73	6.77	-	-	-	-	3.0	12.5	12.5	740	4710	4710	21.4	20.5	19.6
		71+71	6.25	6.25	-	-	-	-	3.0	12.5	12.5	740	4710	4710	21.2	20.3	19.4
	3 room	20+20+20	2.00	2.00	2.00	-	-	-	3.7	6.0	8.1	880	1530	2560	7.0	6.7	6.4
		20+20+25	2.00	2.00	2.50	-	-	-	3.7	6.5	8.6	880	1730	2700	7.9	7.6	7.3
		20+20+35	2.00	2.00	3.50	-	-	-	3.7	7.5	9.1	880	2080	3120	9.6	9.1	8.8
		20+20+50	2.00	2.00	5.00	-	-	-	3.7	9.0	11.2	880	2730	4120	12.5	12.0	11.5
		20+20+60	2.00	2.00	6.00	-	-	-	3.7	10.0	12.1	880	3280	4680	15.1	14.4	13.8
		20+20+71	2.00	2.00	7.10	-	-	-	3.7	11.1	12.6	880	3930	4710	18.0	17.3	16.5
		20+25+25	2.00	2.50	2.50	-	-	-	3.7	7.0	9.1	880	1940	3210	8.9	8.5	8.2
		20+25+35	2.00	2.50	3.50	-	-	-	3.7	8.0	9.6	880	2440	3450	11.2	10.7	10.3
		20+25+50	2.00	2.50	5.00	-	-	-	3.7	9.5	11.7	880	3130	4480	14.4	13.7	13.2
		20+25+60	2.00	2.50	6.00	-	-	-	3.7	10.5	12.6	880	3770	4800	17.3	16.6	15.9
		20+25+71	2.00	2.50	7.10	-	-	-	3.7	11.6	12.6	880	4210	4800	19.1	18.3	17.5
		20+35+35	2.00	3.50	3.50	-	-	-	3.7	9.0	10.1	880	2920	3850	13.4	12.8	12.3
		20+35+50	2.00	3.50	5.00	-	-	-	3.7	10.5	12.0	880	3770	4450	17.3	16.6	15.9
		20+35+60	2.00	3.50	6.00	-	-	-	3.7	11.5	12.6	880	4150	4800	19.1	18.2	17.5
		20+35+71	1.98	3.47	7.04	-	-	-	4.7	12.5	12.6	880	4670	4800	21.2	20.3	19.5
		20+50+50	2.00	5.00	5.00	-	-	-	3.7	12.0	12.6	880	4440	4800	20.4	19.5	18.7
		20+50+60	1.92	4.81	5.77	-	-	-	3.7	12.5	12.6	880	4670	4800	21.4	20.5	19.7
		20+50+71	1.77	4.43	6.29	-	-	-	3.7	12.5	12.6	881	4670	4800	21.4	20.5	19.7
		20+60+60	1.79	5.36	5.36	-	-	-	3.7	12.5	12.6	881	4670	4800	21.4	20.5	19.7
		20+60+71	1.66	4.97	5.88	-	-	-	3.7	12.5	12.6	881	4670	4800	21.4	20.5	19.7
		20+71+71	1.54	5.48	5.48	-	-	-	3.7	12.5	12.6	881	4660	4800	21.4	20.5	19.6
		25+25+25	2.50	2.50	2.50	-	-	-	3.7	7.5	9.6	880	2130	3640	9.8	9.4	9.0
		25+25+35	2.50	2.50	3.50	-	-	-	3.7	8.5	10.1	880	2650	3900	12.2	11.6	11.2
		25+25+50	2.50	2.50	5.00	-	-	-	3.7	10.0	12.6	880	3420	4800	15.7	15.0	14.4
		25+25+60	2.50	2.50	6.00	-	-	-	3.7	11.0	12.6	880	3910	4800	18.0	17.2	16.5
		25+25+71	2.58	2.58	7.33				3.7	12.5	12.6	880	4670	4800	21.2	20.3	19.5
		25+35+35	2.50	3.50	3.50	-	-	-	3.7	9.5	10.4	880	3130	3910	14.4	13.7	13.2
		25+35+50	2.50	3.50	5.00	-	-	-	3.7	11.0	12.6	880	3910	4800	18.0	17.2	16.5
		25+35+60	2.50	3.50	6.00	-	-	-	3.7	12.0	12.6	880	4440	4800	20.4	19.5	18.7
		25+35+71	2.39	3.34	6.77				3.7	12.5	12.6	880	4670	4800	21.4	20.5	19.7
		25+50+50	2.50	5.00	5.00	-	-	-	3.7	12.5	12.6	880	4670	4800	21.4	20.5	19.7
		25+50+60	2.31	4.63	5.56	-	-	-	3.7	12.5	12.6	880	4670	4800	21.4	20.5	19.7
		25+50+71	2.14	4.28	6.08	-	-	-	3.7	12.5	12.6	880	4670	4800	21.4	20.5	19.7
		25+60+60	2.16	5.17	5.17	-	-	-	3.7	12.5	12.6	880	4670	4800	21.4	20.5	19.7
		25+60+71	2.00	4.81	5.69	-	-	-	3.7	12.5	12.6	880	4670	4800	21.4	20.5	19.7
		25+71+71	1.87	5.31	5.31	-	-	-	3.7	12.5	12.6	880	4670	4800	21.4	20.5	19.7
		35+35+35	3.50	3.50	3.50	-	-	-	3.7	10.5	10.9	880	3770	4180	17.3	16.6	15.9
		35+35+50	3.50	3.50	5.00	-	-	-	3.7	12.0	12.6	880	4440	4800	20.4	19.5	18.7
		35+35+60	3.37	3.37	5.77	-	-	-	3.7	12.5	12.6	880	4670	4800	21.4	20.5	19.7
		35+35+71	3.10	3.10	6.29	-	-	-	3.7	12.5	12.6	880	4660	4800	21.2	20.3	19.4
		35+50+50	3.24	4.63	4.63	-	-	-	3.7	12.5	12.6	880	4670	4800	21.4	20.5	19.7
		35+50+60	3.02	4.31	5.17	-	-	-	3.7	12.5	12.6	880	4660	4800	21.4	20.5	19.6
		35+50+71	2.80	4.01	5.69	-	-	-	3.7	12.5	12.6	880	4660	4800	21.4	20.5	19.6
		35+60+60	2.82	4.84	4.84	-	-	-	3.7	12.5	12.6	880	4660	4800	21.4	20.5	19.6
		35+60+71	2.64	4.52	5.35	-	-	-	3.7	12.5	12.6	880	4660	4800	21.4	20.5	19.6
		35+71+71	2.47	5.01	5.01	-	-	-	3.7	12.5	12.6	880	4650	4800	21.3	20.4	19.6
		50+50+50	4.17	4.17	4.17	-	-	-	3.7	12.5	12.6	880	4660	4800	21.4	20.5	19.6
		50+50+60	3.91	3.91	4.69	-	-	-	3.7	12.5	12.6	880	4660	4800	21.4	20.5	19.6
		50+50+71	3.65	3.65	5.19	-	-	-	3.7	12.5	12.6	880	4650	4800	21.3	20.4	19.6
		50+60+60	3.68	4.41	4.41	-	-	-	3.7	12.5	12.6	880	4650	4800	21.3	20.4	19.6
		50+60+71	3.45	4.14	4.90	-	-	-	3.7	12.5	12.6	880	4650	4800	21.3	20.4	19.6
		60+60+60	4.17	4.17	4.17	-	-	-	3.7	12.5	12.6	880	4650	4800	21.3	20.4	19.6
		60+60+71	3.93	3.93	4.65	-	-	-	3.7	12.5	12.6	880	4650	4800	21.3	20.4	19.6
	4 room	20+20+20+20	2.00	2.00	2.00	2.00	-	-	4.4	8.0	10.8	1100	2110	3680	9.6	9.2	8.8
		20+20+20+25	2.00	2.00	2.00	2.50	-	-	4.4	8.5	11.3	1100	2390	3890	10.9	10.4	10.0
		20+20+20+35	2.00	2.00	2.00	3.50	-	-	4.4	9.5	11.8	1100	2900	4350	13.2	12.6	12.1
		20+20+20+50	2.00	2.00	2.00	5.00	-	-	4.4	11.0	12.8	1100	3580	4800	16.3	15.6	14.9
		20+20+20+60	2.00	2.00	2.00	6.00	-	-	4.4	12.0	12.8	1100	4100	4800	18.7	17.8	17.1
		20+20+20+71	1.91	1.91	1.91	6.77	-	-	4.4	12.5	12.8	1100	4730	4800	21.3	20.4	19.5

Indoor unit combination			Cooling capacity (kW)									Power consumption(W)			Standard current(A)		
			Room cooling capacity						Total capacity								
			A	B	C	D	E	F	Min.	Standard	Max.	Min.	Standard	Max.	220V	230V	240V
Cooling operation	4 room	20+20+25+25	2.00	2.00	2.50	2.50	-	-	4.4	9.0	11.8	1100	2600	4410	11.8	11.3	10.8
		20+20+25+35	2.00	2.00	2.50	3.50	-	-	4.4	10.0	12.3	1100	3210	4780	14.6	14.0	13.4
		20+20+25+50	2.00	2.00	2.50	5.00	-	-	4.4	11.5	12.8	1100	3830	4800	17.4	16.7	16.0
		20+20+25+60	2.00	2.00	2.50	6.00	-	-	4.4	12.5	12.8	1100	4740	4800	21.6	20.6	19.8
		20+20+25+71	1.84	1.84	2.30	6.53	-	-	4.4	12.5	12.8	1100	4730	4800	21.5	20.6	19.7
		20+20+35+35	2.00	2.00	3.50	3.50	-	-	4.4	11.0	12.8	1100	3580	4800	16.3	15.6	14.9
		20+20+35+50	2.00	2.00	3.50	5.00	-	-	4.4	12.5	12.8	1100	4740	4800	21.6	20.6	19.8
		20+20+35+60	1.85	1.85	3.24	5.56	-	-	4.4	12.5	12.8	1100	4730	4800	21.5	20.6	19.7
		20+20+35+71	1.71	1.71	3.00	6.08	-	-	4.4	12.5	12.8	1100	4730	4800	21.5	20.6	19.7
		20+20+50+50	1.79	1.79	4.46	4.46	-	-	4.4	12.5	12.8	1100	4730	4800	21.5	20.6	19.7
		20+20+50+60	1.67	1.67	4.17	5.00	-	-	4.4	12.5	12.8	1100	4730	4800	21.5	20.6	19.7
		20+20+50+71	1.55	1.55	3.88	5.51	-	-	4.4	12.5	12.8	1100	4720	4800	21.5	20.5	19.7
		20+20+60+60	1.56	1.56	4.69	4.69	-	-	4.4	12.5	12.8	1100	4720	4800	21.5	20.5	19.7
		20+20+60+71	1.46	1.46	4.39	5.19	-	-	4.4	12.5	12.8	1100	4720	4800	21.5	20.5	19.7
		20+20+71+71	1.37	1.37	4.88	4.88			4.4	12.5	12.8	1100	4710	4800	21.4	20.5	19.6
		20+25+25+25	2.00	2.50	2.50	2.50	-	-	4.4	9.5	12.8	1100	2900	4800	13.2	12.6	12.1
		20+25+25+35	2.00	2.50	2.50	3.50	-	-	4.4	10.5	12.8	1100	3440	4800	15.7	15.0	14.3
		20+25+25+50	2.00	2.50	2.50	5.00	-	-	4.4	12.0	12.8	1100	4100	4800	18.7	17.8	17.1
		20+25+25+60	1.92	2.40	2.40	5.77	-	-	4.4	12.5	12.8	1100	4740	4800	21.6	20.6	19.8
		20+25+25+71	1.82	2.26	2.26	6.16	-	-	4.4	12.5	12.8	1100	4730	4800	21.5	20.6	19.7
		20+25+35+35	2.00	2.50	3.50	3.50	-	-	4.4	11.5	12.8	1100	3830	4800	17.4	16.7	16.0
		20+25+35+50	1.92	2.40	3.37	4.81	-	-	4.4	12.5	12.8	1100	4740	4800	21.6	20.6	19.8
		20+25+35+60	1.79	2.23	3.13	5.36	-	-	4.4	12.5	12.8	1100	4730	4800	21.5	20.6	19.7
		20+25+35+71	1.66	2.07	2.90	5.88			4.4	12.5	12.8	1100	4730	4800	21.5	20.6	19.7
		20+25+50+50	1.72	2.16	4.31	4.31	-	-	4.4	12.5	12.8	1100	4730	4800	21.5	20.6	19.7
		20+25+50+60	1.61	2.02	4.03	4.84	-	-	4.4	12.5	12.8	1100	4720	4800	21.5	20.5	19.7
		20+25+50+71	1.51	1.88	3.77	5.35			4.4	12.5	12.8	1100	4720	4800	21.5	20.5	19.7
		20+25+60+60	1.52	1.89	4.55	4.55	-	-	4.4	12.5	12.8	1100	4720	4800	21.5	20.5	19.7
		20+25+60+71	1.42	1.78	4.26	5.04			4.4	12.5	12.8	1100	4720	4800	21.5	20.5	19.7
		20+25+71+71	1.34	1.67	4.75	4.75			4.4	12.5	12.8	1100	4700	4800	21.4	20.5	19.6
		20+35+35+35	2.00	3.50	3.50	3.50	-	-	4.4	12.5	12.8	1100	4740	4800	21.6	20.6	19.8
		20+35+35+50	1.79	3.13	3.13	4.46	-	-	4.4	12.5	12.8	1100	4730	4800	21.5	20.6	19.7
		20+35+35+60	1.67	2.92	2.92	5.00	-	-	4.4	12.5	12.8	1100	4730	4800	21.5	20.6	19.7
		20+35+35+71	1.55	2.72	2.72	5.51			4.4	12.5	12.8	1100	4720	4800	21.5	20.5	19.7
		20+35+50+50	1.61	2.82	4.03	4.03	-	-	4.4	12.5	12.8	1100	4720	4800	21.5	20.5	19.7
		20+35+50+60	1.52	2.65	3.79	4.55	-	-	4.4	12.5	12.8	1100	4720	4800	21.5	20.5	19.7
		20+35+50+71	1.42	2.49	3.55	5.04			4.4	12.5	12.8	1100	4720	4800	21.5	20.5	19.7
		20+35+60+60	1.43	2.50	4.29	4.29			4.4	12.5	12.8	1100	4710	4800	21.4	20.5	19.6
		20+35+60+71	1.34	2.35	4.03	4.77			4.4	12.5	12.8	1100	4710	4800	21.4	20.5	19.6
		20+50+50+50	1.47	3.68	3.68	3.68	-	-	4.4	12.5	12.8	1100	4720	4800	21.5	20.5	19.7
		20+50+50+60	1.39	3.47	3.47	4.17	-	-	4.4	12.5	12.8	1100	4710	4800	21.4	20.5	19.6
		20+50+50+71	1.31	3.27	3.27	4.65			4.4	12.5	12.8	1100	4700	4800	21.4	20.5	19.6
		20+50+60+60	1.32	3.29	3.95	3.95	-	-	4.4	12.5	12.8	1100	4700	4800	21.4	20.5	19.6
		25+25+25+25	2.50	2.50	2.50	2.50	-	-	4.4	10.0	12.8	1100	3210	4800	14.6	14.0	13.4
		25+25+25+35	2.50	2.50	2.50	3.50	-	-	4.4	11.0	12.8	1100	3580	4800	16.3	15.6	14.9
		25+25+25+50	2.50	2.50	2.50	5.00	-	-	4.4	12.5	12.8	1100	4740	4800	21.6	20.6	19.8
		25+25+25+60	2.31	2.31	2.31	5.56	-	-	4.4	12.5	12.8	1100	4730	4800	21.5	20.6	19.7
		25+25+25+71	2.14	2.14	2.14	6.08			4.4	12.5	12.8	1100	4730	4800	21.5	20.6	19.7
		25+25+35+35	2.50	2.50	3.50	3.50	-	-	4.4	12.0	12.8	1100	4100	4800	18.7	17.8	17.1
		25+25+35+50	2.31	2.31	3.24	4.63	-	-	4.4	12.5	12.8	1100	4730	4800	21.5	20.6	19.7
		25+25+35+60	2.16	2.16	3.02	5.17			4.4	12.5	12.8	1100	4730	4800	21.5	20.6	19.7
		25+25+35+71	2.00	2.00	2.80	5.69			4.4	12.5	12.8	1100	4720	4800	21.5	20.5	19.7
		25+25+50+50	2.08	2.08	4.17	4.17	-	-	4.4	12.5	12.8	1100	4730	4800	21.5	20.6	19.7
		25+25+50+60	1.95	1.95	3.91	4.69	-	-	4.4	12.5	12.8	1100	4720	4800	21.5	20.5	19.7
		25+25+50+71	1.83	1.83	3.65	5.19	-	-	4.4	12.5	12.8	1100	4720	4800	21.5	20.5	19.7
		25+25+60+60	1.84	1.84	4.41	4.41	-	-	4.4	12.5	12.8	1100	4720	4800	21.5	20.5	19.7
		25+25+60+71	1.73	1.73	4.14	4.90	-	-	4.4	12.5	12.8	1100	4710	4800	21.4	20.5	19.6
		25+25+71+71	1.63	1.63	4.62	4.62	-	-	4.4	12.5	12.8	1100	4700	4800	21.4	20.5	19.6
		25+35+35+35	2.40	3.37	3.37	3.37	-	-	4.4	12.5	12.8	1100	4740	4800	21.6	20.6	19.8
		25+35+35+50	2.16	3.02	3.02	4.31	-	-	4.4	12.5	12.8	1100	4730	4800	21.5	20.6	19.7
		25+35+35+60	2.02	2.82	2.82	4.84	-	-	4.4	12.5	12.8	1100	4720	4800	21.5	20.5	19.7
		25+35+35+71	1.88	2.64	2.64	5.35			4.4	12.5	12.8	1100	4720	4800	21.5	20.5	19.7
		25+35+50+50	1.95	2.73	3.91	3.91	-	-	4.4	12.5	12.8	1100	4720	4800	21.5	20.5	19.7
		25+35+50+60	1.84	2.57	3.68	4.41	-	-	4.4	12.5	12.8	1100	4720	4800	21.5	20.5	19.7
		25+35+50+71	1.73	2.42	3.45	4.90			4.4	12.5	12.8	1100	4710	4800	21.4	20.5	19.6
		25+35+60+60	1.74	2.43	4.17	4.17	-	-	4.4	12.5	12.8	1100	4710	4800	21.4	20.5	19.6
		25+35+60+71	1.64	2.29	3.93	4.65	-	-	4.4	12.5	12.8	1100	4700	4800	21.4	20.5	19.6
		25+50+50+50	1.79	3.57	3.57	3.57	-	-	4.4	12.5	12.8	1100	4710	4800	21.4	20.5	19.6
		25+50+50+60	1.69	3.38	3.38	4.05	-	-	4.4	12.5	12.8	1100	4710	4800	21.4	20.5	19.6
		25+50+60+60	1.60	3.21	3.85	3.85	-	-	4.4	12.5	12.8	1100	4700	4800	21.4	20.5	19.6
		35+35+35+35	3.13	3.13	3.13	3.13	-	-	4.4	12.5	12.8	1100	4730	4800	21.5	20.6	19.7
		35+35+35+50	2.82	2.82	2.82	4.03	-	-	4.4	12.5	12.8	1100	4720	4800	21.5	20.5	19.7
		35+35+35+60	2.65	2.65	2.65	4.55	-	-	4.4	12.5	12.8	1100	4720	4800	21.5	20.5	19.7
		35+35+35+71	2.49	2.49	2.49	5.04	-	-	4.4	12.5	12.8	1100	4710	4800	21.4	20.5	19.6
		35+35+50+50	2.57	2.57	3.68	3.68	-	-	4.4	12.5	12.8	1100	4720	4800	21.5	20.5	19.7
		35+35+50+60	2.43	2.43	3.47	4.17	-	-	4.4	12.5	12.8	1100	4710	4800	21.4	20.5	19.6
		35+35+50+71	2.29	2.29	3.27	4.65	-	-	4.4	12.5	12.8	1100	4700	4800	21.4	20.5	19.6
		35+35+60+60	2.30	2.30	3.95	3.95	-	-	4.4	12.5	12.8	1100	4700	4800	21.4	20.5	19.6
		35+50+50+50	2.36	3.38	3.38	3.38	-	-	4.4	12.5	12.8	1100	4710	4800	21.4	20.5	19.6
		35+50+50+60	2.24	3.21	3.21	3.85	-	-	4.4	12.5	12.8	1100	4700	4800	21.4	20.5	19.6
	5 room	20+20+20+20+20	2.00	2.00	2.00	2.00	2.00	-	5.1	10.0	13.3	1210	2950	4800	13.4	12.8	12.3
		20+20+20+20+25	2.00	2.00	2.00	2.00	2.50	-	5.1	10.5	13.3	1210	3200	4800	14.6	13.9	13.3
		20+20+20+20+35	2.00	2.00	2.00	2.00	3.50	-	5.1	11.5	13.3	1210	3710	4800	16.9	16.1	15.5
		20+20+20+20+50	1.92	1.92	1.92	1.92	4.81	-	5.1	12.5	13.3	1210	4430	4800	20.2	19.3	18.5
		20+20+20+20+60	1.79	1.79	1.79	1.79	5.36	-	5.1	12.5	13.3	1210	4420	4800	20.1	19.2	18.4
		20+20+20+20+71	1.66	1.66	1.66	1.66	5.88	-	5.1	12.5	13.3	1210	4410	4800	20.1	19.2	18.4

MULTI-SPLIT SYSTEM

Indoor unit combination			Cooling capacity (kW)									Power consumption(W)			Standard current(A)		
			Room cooling capacity						Total capacity			Min.	Standard	Max.	220V	230V	240V
			A	B	C	D	E	F	Min.	Standard	Max.						
Cooling operation	5 room	20+20+20+25+25	2.00	2.00	2.00	2.50	2.50	-	5.1	11.0	13.3	1210	3400	4800	15.5	14.8	14.2
		20+20+20+25+35	2.00	2.00	2.00	2.50	3.50	-	5.1	12.0	13.3	1210	4090	4800	18.6	17.8	17.1
		20+20+20+25+50	1.85	1.85	1.85	2.31	4.63	-	5.1	12.5	13.3	1210	4430	4800	20.2	19.3	18.5
		20+20+20+25+60	1.72	1.72	1.72	2.16	5.17	-	5.1	12.5	13.3	1210	4420	4800	20.1	19.2	18.4
		20+20+20+25+71	1.60	1.60	1.60	2.00	5.69	-	5.1	12.5	13.3	1210	4410	4800	20.1	19.2	18.4
		20+20+20+35+35	1.92	1.92	1.92	3.37	3.37	-	5.1	12.5	13.3	1210	4430	4800	20.2	19.3	18.5
		20+20+20+35+50	1.72	1.72	1.72	3.02	4.31	-	5.1	12.5	13.3	1210	4420	4800	20.1	19.2	18.4
		20+20+20+35+60	1.61	1.61	1.61	2.82	4.84	-	5.1	12.5	13.3	1210	4410	4800	20.1	19.2	18.4
		20+20+20+35+71	1.51	1.51	1.51	2.64	5.35	-	5.1	12.5	13.3	1210	4400	4800	20.0	19.1	18.4
		20+20+20+50+50	1.56	1.56	1.56	3.91	3.91	-	5.1	12.5	13.3	1210	4410	4800	20.1	19.2	18.4
		20+20+20+50+60	1.47	1.47	1.47	3.68	4.41	-	5.1	12.5	13.3	1210	4400	4800	20.0	19.1	18.4
		20+20+20+50+71	1.38	1.38	1.38	3.45	4.90	-	5.1	12.5	13.3	1210	4390	4800	20.0	19.1	18.3
		20+20+20+60+60	1.39	1.39	1.39	4.17	4.17	-	5.1	12.5	13.3	1210	4390	4800	20.0	19.1	18.3
		20+20+20+60+71	1.31	1.31	1.31	3.93	4.65	-	5.1	12.5	13.3	1210	4380	4800	19.9	19.1	18.3
		20+20+25+25+25	2.00	2.00	2.50	2.50	2.50	-	5.1	11.5	13.3	1210	3710	4800	16.9	16.1	15.5
		20+20+25+25+35	2.00	2.00	2.50	2.50	3.50	-	5.1	12.5	13.3	1210	4440	4800	20.2	19.3	18.5
		20+20+25+25+50	1.79	1.79	2.23	2.23	4.46	-	5.1	12.5	13.3	1210	4420	4800	20.1	19.2	18.4
		20+20+25+25+60	1.67	1.67	2.08	2.08	5.00	-	5.1	12.5	13.3	1210	4410	4800	20.1	19.2	18.4
		20+20+25+25+71	1.55	1.55	1.94	1.94	5.51	-	5.1	12.5	13.3	1210	4410	4800	20.1	19.2	18.4
		20+20+25+35+35	1.85	1.85	2.31	3.24	3.24	-	5.1	12.5	13.3	1210	4430	4800	20.2	19.3	18.5
		20+20+25+35+50	1.67	1.67	2.08	2.92	4.17	-	5.1	12.5	13.3	1210	4410	4800	20.1	19.2	18.4
		20+20+25+35+60	1.56	1.56	1.95	2.73	4.69	-	5.1	12.5	13.3	1210	4410	4800	20.1	19.2	18.4
		20+20+25+35+71	1.46	1.46	1.83	2.56	5.19	-	5.1	12.5	13.3	1210	4400	4800	20.0	19.1	18.4
		20+20+25+50+50	1.52	1.52	1.89	3.79	3.79	-	5.1	12.5	13.3	1210	4400	4800	20.0	19.1	18.4
		20+20+25+50+60	1.43	1.43	1.79	3.57	4.29	-	5.1	12.5	13.3	1210	4390	4800	20.0	19.1	18.3
		20+20+25+50+71	1.34	1.34	1.68	3.36	4.77	-	5.1	12.5	13.3	1210	4390	4800	20.0	19.1	18.3
		20+20+25+60+60	1.35	1.35	1.69	4.05	4.05	-	5.1	12.5	13.3	1210	4390	4800	20.0	19.1	18.3
		20+20+35+35+35	1.72	1.72	3.02	3.02	3.02	-	5.1	12.5	13.3	1210	4420	4800	20.1	19.2	18.4
		20+20+35+35+50	1.56	1.56	2.73	2.73	3.91	-	5.1	12.5	13.3	1210	4410	4800	20.1	19.2	18.4
		20+20+35+35+60	1.47	1.47	2.57	2.57	4.41	-	5.1	12.5	13.3	1210	4400	4800	20.0	19.1	18.4
		20+20+35+35+71	1.38	1.38	2.42	2.42	4.90	-	5.1	12.5	13.3	1210	4390	4800	20.0	19.1	18.3
		20+20+35+50+50	1.43	1.43	2.50	3.57	3.57	-	5.1	12.5	13.3	1210	4390	4800	20.0	19.1	18.3
		20+20+35+50+60	1.35	1.35	2.36	3.38	4.05	-	5.1	12.5	13.3	1210	4390	4800	20.0	19.1	18.3
		20+20+35+60+60	1.28	1.28	2.24	3.85	3.85	-	5.1	12.5	13.3	1210	4380	4800	19.9	19.1	18.3
		20+20+50+50+50	1.32	1.32	3.29	3.29	3.29	-	5.1	12.5	13.3	1210	4380	4800	19.9	19.1	18.3
		20+25+25+25+25	2.00	2.50	2.50	2.50	2.50	-	5.1	12.0	13.3	1210	4090	4800	18.6	17.8	17.1
		20+25+25+25+35	1.92	2.40	2.40	2.40	3.37	-	5.1	12.5	13.3	1210	4430	4800	20.2	19.3	18.5
		20+25+25+25+50	1.72	2.16	2.16	2.16	4.31	-	5.1	12.5	13.3	1210	4420	4800	20.1	19.2	18.4
		20+25+25+25+60	1.61	2.02	2.02	2.02	4.84	-	5.1	12.5	13.3	1210	4410	4800	20.1	19.2	18.4
		20+25+25+25+71	1.51	1.88	1.88	1.88	5.35	-	5.1	12.5	13.3	1210	4400	4800	20.0	19.1	18.4
		20+25+25+35+35	1.79	2.23	2.23	3.13	3.13	-	5.1	12.5	13.3	1210	4420	4800	20.1	19.2	18.4
		20+25+25+35+50	1.61	2.02	2.02	2.82	4.03	-	5.1	12.5	13.3	1210	4410	4800	20.1	19.2	18.4
		20+25+25+35+60	1.52	1.89	1.89	2.65	4.55	-	5.1	12.5	13.3	1210	4400	4800	20.0	19.1	18.4
		20+25+25+35+71	1.42	1.78	1.78	2.49	5.04	-	5.1	12.5	13.3	1210	4390	4800	20.0	19.1	18.3
		20+25+25+50+50	1.47	1.84	1.84	3.68	3.68	-	5.1	12.5	13.3	1210	4400	4800	20.0	19.1	18.4
		20+25+25+50+60	1.39	1.74	1.74	3.47	4.17	-	5.1	12.5	13.3	1210	4390	4800	20.0	19.1	18.3
		20+25+25+50+71	1.31	1.64	1.64	3.27	4.65	-	5.1	12.5	13.3	1210	4380	4800	19.9	19.1	18.3
		20+25+25+60+60	1.32	1.64	1.64	3.95	3.95	-	5.1	12.5	13.3	1210	4380	4800	19.9	19.1	18.3
		20+25+35+35+35	1.67	2.08	2.92	2.92	2.92	-	5.1	12.5	13.3	1210	4410	4800	20.1	19.2	18.4
		20+25+35+35+50	1.52	1.89	2.65	2.65	3.79	-	5.1	12.5	13.3	1210	4400	4800	20.0	19.1	18.4
		20+25+35+35+60	1.43	1.79	2.50	2.50	4.29	-	5.1	12.5	13.3	1210	4390	4800	20.0	19.1	18.3
		20+25+35+35+71	1.34	1.68	2.35	2.35	4.77	-	5.1	12.5	13.3	1210	4390	4800	20.0	19.1	18.3
		20+25+35+50+50	1.39	1.74	2.43	3.47	3.47	-	5.1	12.5	13.3	1210	4390	4800	20.0	19.1	18.3
		20+25+35+50+60	1.32	1.64	2.30	3.29	3.95	-	5.1	12.5	13.3	1210	4380	4800	19.9	19.1	18.3
		20+25+50+50+50	1.28	1.60	3.21	3.21	3.21	-	5.1	12.5	13.3	1210	4380	4800	19.9	19.1	18.3
		20+35+35+35+35	1.56	2.73	2.73	2.73	2.73	-	5.1	12.5	13.3	1210	4410	4800	20.1	19.2	18.4
		20+35+35+35+50	1.43	2.50	2.50	2.50	3.57	-	5.1	12.5	13.3	1210	4390	4800	20.0	19.1	18.3
		20+35+35+35+60	1.35	2.36	2.36	2.36	4.05	-	5.1	12.5	13.3	1210	4390	4800	20.0	19.1	18.3
		20+35+35+50+50	1.32	2.30	2.30	3.29	3.29	-	5.1	12.5	13.3	1210	4380	4800	19.9	19.1	18.3
		25+25+25+25+25	2.50	2.50	2.50	2.50	2.50	-	5.1	12.5	13.3	1210	4440	4800	20.2	19.3	18.5
		25+25+25+25+35	2.31	2.31	2.31	2.31	3.24	-	5.1	12.5	13.3	1210	4430	4800	20.2	19.3	18.5
		25+25+25+25+50	2.08	2.08	2.08	2.08	4.17	-	5.1	12.5	13.3	1210	4410	4800	20.1	19.2	18.4
		25+25+25+25+60	1.95	1.95	1.95	1.95	4.69	-	5.1	12.5	13.3	1210	4410	4800	20.1	19.2	18.4
		25+25+25+35+35	2.16	2.16	2.16	3.02	3.02	-	5.1	12.5	13.3	1210	4420	4800	20.1	19.2	18.4
		25+25+25+35+50	1.95	1.95	1.95	2.73	3.91	-	5.1	12.5	13.3	1210	4410	4800	20.1	19.2	18.4
		25+25+25+35+60	1.84	1.84	1.84	2.57	4.41	-	5.1	12.5	13.3	1210	4400	4800	20.0	19.1	18.4
		25+25+25+35+71	1.73	1.73	1.73	2.42	4.90	-	5.1	12.5	13.3	1210	4390	4800	20.0	19.1	18.3
		25+25+25+50+50	1.79	1.79	1.79	3.57	3.57	-	5.1	12.5	13.3	1210	4390	4800	20.0	19.1	18.3
		25+25+25+50+60	1.69	1.69	1.69	3.38	4.05	-	5.1	12.5	13.3	1210	4390	4800	20.0	19.1	18.3
		25+25+25+60+60	1.60	1.60	1.60	3.85	3.85	-	5.1	12.5	13.3	1210	4380	4800	19.9	19.1	18.3
		25+25+35+35+35	2.02	2.02	2.82	2.82	2.82	-	5.1	12.5	13.3	1210	4410	4800	20.1	19.2	18.4
		25+25+35+35+50	1.84	1.84	2.57	2.57	3.68	-	5.1	12.5	13.3	1210	4400	4800	20.0	19.1	18.4
		25+25+35+35+60	1.74	1.74	2.43	2.43	4.17	-	5.1	12.5	13.3	1210	4390	4800	20.0	19.1	18.3
		25+25+35+35+71	1.64	1.64	2.29	2.29	4.65	-	5.1	12.5	13.3	1210	4380	4800	19.9	19.1	18.3
		25+25+35+50+50	1.69	1.69	2.36	3.38	3.38	-	5.1	12.5	13.3	1210	4390	4800	20.0	19.1	18.3
		25+25+35+50+60	1.60	1.60	2.24	3.21	3.85	-	5.1	12.5	13.3	1210	4380	4800	19.9	19.1	18.3
		25+35+35+35+35	1.89	2.65	2.65	2.65	2.65	-	5.1	12.5	13.3	1210	4400	4800	20.0	19.1	18.4
		25+35+35+35+50	1.74	2.43	2.43	2.43	3.47	-	5.1	12.5	13.3	1210	4390	4800	20.0	19.1	18.3
		25+35+35+35+60	1.64	2.30	2.30	2.30	3.95	-	5.1	12.5	13.3	1210	4380	4800	19.9	19.1	18.3
		25+35+35+50+50	1.60	2.24	2.24	3.21	3.21	-	5.1	12.5	13.3	1210	4380	4800	19.9	19.1	18.3
		35+35+35+35+35	2.50	2.50	2.50	2.50	2.50	-	5.1	12.5	13.3	1210	4390	4800	20.0	19.1	18.3
		35+35+35+35+50	2.30	2.30	2.30	2.30	3.29	-	5.1	12.5	13.3	1210	4380	4800	19.9	19.1	18.3

Indoor unit combination			Cooling capacity (kW)									Power consumption(W)			Standard current(A)		
			Room cooling capacity						Total capacity								
			A	B	C	D	E	F	Min.	Standard	Max.	Min.	Standard	Max.	220V	230V	240V
Cooling operation	6 room	20+20+20+20+20+20	2.00	2.00	2.00	2.00	2.00	2.00	5.5	12.0	13.6	1280	3750	4620	17.1	16.3	15.6
		20+20+20+20+20+25	2.00	2.00	2.00	2.00	2.00	2.50	5.5	12.5	13.3	1280	4010	4800	18.2	17.5	16.7
		20+20+20+20+20+35	1.85	1.85	1.85	1.85	1.85	3.24	5.5	12.5	13.3	1280	4000	4800	18.2	17.4	16.7
		20+20+20+20+20+50	1.67	1.67	1.67	1.67	1.67	4.17	5.5	12.5	13.3	1280	3990	4800	18.2	17.4	16.6
		20+20+20+20+20+60	1.56	1.56	1.56	1.56	1.56	4.69	5.5	12.5	13.3	1280	3990	4800	18.2	17.4	16.6
		20+20+20+20+20+71	1.46	1.46	1.46	1.46	1.46	5.19	5.5	12.5	13.8	1280	3980	4800	18.1	17.3	16.6
		20+20+20+20+25+25	1.92	1.92	1.92	1.92	2.40	2.40	5.5	12.5	13.8	1280	4000	4800	18.2	17.4	16.7
		20+20+20+20+25+35	1.79	1.79	1.79	1.79	2.23	3.13	5.5	12.5	13.8	1280	4000	4800	18.2	17.4	16.7
		20+20+20+20+25+50	1.61	1.61	1.61	1.61	2.02	4.03	5.5	12.5	13.8	1280	3990	4800	18.2	17.4	16.6
		20+20+20+20+25+60	1.52	1.52	1.52	1.52	1.89	4.55	5.5	12.5	13.8	1280	3990	4800	18.2	17.4	16.6
		20+20+20+20+35+35	1.67	1.67	1.67	1.67	2.92	2.92	5.5	12.5	13.8	1280	3990	4800	18.2	17.4	16.6
		20+20+20+20+35+50	1.52	1.52	1.52	1.52	2.65	3.79	5.5	12.5	13.8	1280	3990	4800	18.2	17.4	16.6
		20+20+20+20+35+60	1.43	1.43	1.43	1.43	2.50	4.29	5.5	12.5	13.8	1280	3980	4800	18.1	17.3	16.6
		20+20+20+20+35+71	1.34	1.34	1.34	1.34	2.35	4.77	5.5	12.5	13.8	1280	3980	4800	18.1	17.3	16.6
		20+20+20+20+50+50	1.39	1.39	1.39	1.39	3.47	3.47	5.5	12.5	13.8	1280	3980	4800	18.1	17.3	16.6
		20+20+20+20+50+60	1.32	1.32	1.32	1.32	3.29	3.95	5.5	12.5	13.8	1280	3970	4800	18.1	17.3	16.6
		20+20+20+25+25+25	1.85	1.85	1.85	2.31	2.31	2.31	5.5	12.5	13.8	1280	4000	4800	18.2	17.4	16.7
		20+20+20+25+25+35	1.72	1.72	1.72	2.16	2.16	3.02	5.5	12.5	13.8	1280	4000	4800	18.2	17.4	16.7
		20+20+20+25+25+50	1.56	1.56	1.56	1.95	1.95	3.91	5.5	12.5	13.8	1280	3990	4800	18.2	17.4	16.6
		20+20+20+25+25+60	1.47	1.47	1.47	1.84	1.84	4.41	5.5	12.5	13.8	1280	3980	4800	18.1	17.3	16.6
		20+20+20+25+25+71	1.38	1.38	1.38	1.73	1.73	4.90	5.5	12.5	13.8	1280	3980	4800	18.1	17.3	16.6
		20+20+20+25+35+35	1.61	1.61	1.61	2.02	2.82	2.82	5.5	12.5	13.8	1280	3990	4800	18.2	17.4	16.6
		20+20+20+25+35+50	1.47	1.47	1.47	1.84	2.57	3.68	5.5	12.5	13.8	1280	3980	4800	18.1	17.3	16.6
		20+20+20+25+35+60	1.39	1.39	1.39	1.74	2.43	4.17	5.5	12.5	13.8	1280	3980	4800	18.1	17.3	16.6
		20+20+20+25+35+71	1.31	1.31	1.31	1.64	2.29	4.65	5.5	12.5	13.8	1280	3970	4800	18.1	17.3	16.6
		20+20+20+25+50+50	1.35	1.35	1.35	1.69	3.38	3.38	5.5	12.5	13.8	1280	3980	4800	18.1	17.3	16.6
		20+20+20+25+50+60	1.28	1.28	1.28	1.60	3.21	3.85	5.5	12.5	13.8	1280	3970	4800	18.1	17.3	16.6
		20+20+20+35+35+35	1.52	1.52	1.52	2.65	2.65	2.65	5.5	12.5	13.8	1280	3990	4800	18.2	17.4	16.6
		20+20+20+35+35+50	1.39	1.39	1.39	2.43	2.43	3.47	5.5	12.5	13.8	1280	3980	4800	18.1	17.3	16.6
		20+20+20+35+35+60	1.32	1.32	1.32	2.30	2.30	3.95	5.5	12.5	13.8	1280	3970	4800	18.1	17.3	16.6
		20+20+20+35+50+50	1.28	1.28	1.28	2.24	3.21	3.21	5.5	12.5	13.8	1280	3970	4800	18.1	17.3	16.6
		20+20+25+25+25+25	1.79	1.79	2.23	2.23	2.23	2.23	5.5	12.5	13.8	1280	4000	4800	18.2	17.4	16.7
		20+20+25+25+25+35	1.67	1.67	2.08	2.08	2.08	2.92	5.5	12.5	13.8	1280	3990	4800	18.2	17.4	16.6
		20+20+25+25+25+50	1.52	1.52	1.89	1.89	1.89	3.79	5.5	12.5	13.8	1280	3990	4800	18.2	17.4	16.6
		20+20+25+25+25+60	1.43	1.43	1.79	1.79	1.79	4.29	5.5	12.5	13.8	1280	3980	4800	18.1	17.3	16.6
		20+20+25+25+25+71	1.34	1.34	1.68	1.68	1.68	4.77	5.5	12.5	13.8	1280	3980	4800	18.1	17.3	16.6
		20+20+25+25+35+35	1.56	1.56	1.95	1.95	2.73	2.73	5.5	12.5	13.8	1280	3990	4800	18.2	17.4	16.6
		20+20+25+25+35+50	1.43	1.43	1.79	1.79	2.50	3.57	5.5	12.5	13.8	1280	3980	4800	18.1	17.3	16.6
		20+20+25+25+35+60	1.35	1.35	1.69	1.69	2.36	4.05	5.5	12.5	13.8	1280	3980	4800	18.1	17.3	16.6
		20+20+25+25+50+50	1.32	1.32	1.64	1.64	3.29	3.29	5.5	12.5	13.8	1280	3970	4800	18.1	17.3	16.6
		20+20+25+35+35+35	1.47	1.47	1.84	2.57	2.57	2.57	5.5	12.5	13.8	1280	3980	4800	18.1	17.3	16.6
		20+20+25+35+35+50	1.35	1.35	1.69	2.36	2.36	3.38	5.5	12.5	13.8	1280	3980	4800	18.1	17.3	16.6
		20+20+25+35+35+60	1.28	1.28	1.60	2.24	2.24	3.85	5.5	12.5	13.8	1280	3970	4800	18.1	17.3	16.6
		20+20+35+35+35+35	1.39	1.39	2.43	2.43	2.43	2.43	5.5	12.5	13.8	1280	3980	4800	18.1	17.3	16.6
		20+20+35+35+35+50	1.28	1.28	2.24	2.24	2.24	3.21	5.5	12.5	13.8	1280	3970	4800	18.1	17.3	16.6
		20+25+25+25+25+25	1.72	2.16	2.16	2.16	2.16	2.16	5.5	12.5	13.8	1280	4000	4800	18.2	17.4	16.7
		20+25+25+25+25+35	1.61	2.02	2.02	2.02	2.02	2.82	5.5	12.5	13.8	1280	3990	4800	18.2	17.4	16.6
		20+25+25+25+25+50	1.47	1.84	1.84	1.84	1.84	3.68	5.5	12.5	13.8	1280	3980	4800	18.1	17.3	16.6
		20+25+25+25+25+60	1.39	1.74	1.74	1.74	1.74	4.17	5.5	12.5	13.8	1280	3980	4800	18.1	17.3	16.6
		20+25+25+25+25+71	1.31	1.64	1.64	1.64	1.64	4.65	5.5	12.5	13.8	1280	3970	4800	18.1	17.3	16.6
		20+25+25+25+35+35	1.52	1.89	1.89	1.89	2.65	2.65	5.5	12.5	13.8	1280	3990	4800	18.2	17.4	16.6
		20+25+25+25+35+50	1.39	1.74	1.74	1.74	2.43	3.47	5.5	12.5	13.8	1280	3980	4800	18.1	17.3	16.6
		20+25+25+25+35+60	1.32	1.64	1.64	1.64	2.30	3.95	5.5	12.5	13.8	1280	3970	4800	18.1	17.3	16.6
		20+25+25+25+50+50	1.28	1.60	1.60	1.60	3.21	3.21	5.5	12.5	13.8	1280	3970	4800	18.1	17.3	16.6
		20+25+25+35+35+35	1.43	1.79	1.79	2.50	2.50	2.50	5.5	12.5	13.8	1280	3980	4800	18.1	17.3	16.6
		20+25+25+35+35+50	1.32	1.64	1.64	2.30	2.30	3.29	5.5	12.5	13.8	1280	3970	4800	18.1	17.3	16.6
		20+25+35+35+35+35	1.35	1.69	2.36	2.36	2.36	2.36	5.5	12.5	13.8	1280	3980	4800	18.1	17.3	16.6
		20+35+35+35+35+35	1.28	2.24	2.24	2.24	2.24	2.24	5.5	12.5	13.8	1280	3970	4800	18.1	17.3	16.6
		25+25+25+25+25+25	2.08	2.08	2.08	2.08	2.08	2.08	5.5	12.5	13.8	1280	3990	4800	18.2	17.4	16.6
		25+25+25+25+25+35	1.95	1.95	1.95	1.95	1.95	2.73	5.5	12.5	13.8	1280	3990	4800	18.2	17.4	16.6
		25+25+25+25+25+50	1.79	1.79	1.79	1.79	1.79	3.57	5.5	12.5	13.8	1280	3980	4800	18.1	17.3	16.6
		25+25+25+25+25+60	1.69	1.69	1.69	1.69	1.69	4.05	5.5	12.5	13.8	1280	3980	4800	18.1	17.3	16.6
		25+25+25+25+35+35	1.84	1.84	1.84	1.84	2.57	2.57	5.5	12.5	13.8	1280	3980	4800	18.1	17.3	16.6
		25+25+25+25+35+50	1.69	1.69	1.69	1.69	2.36	3.38	5.5	12.5	13.8	1280	3980	4800	18.1	17.3	16.6
		25+25+25+25+35+60	1.60	1.60	1.60	1.60	2.24	3.85	5.5	12.5	13.8	1280	3970	4800	18.1	17.3	16.6
		25+25+25+35+35+35	1.74	1.74	1.74	2.43	2.43	2.43	5.5	12.5	13.8	1280	3980	4800	18.1	17.3	16.6
		25+25+25+35+35+50	1.60	1.60	1.60	2.24	2.24	3.21	5.5	12.5	13.8	1280	3970	4800	18.1	17.3	16.6
		25+25+35+35+35+35	1.64	1.64	2.30	2.30	2.30	2.30	5.5	12.5	13.8	1280	3970	4800	18.1	17.3	16.6

CONTROL SYSTEM

Wired Remote Control (option)

RC-EX3A

Advanced wired remote control

The RC-EX3A controller enables extensive access to service and maintenance data combined with easy to use full dot LCD back light display.
All settings are changed by tapping the touch screen panel.

- **Economy & Timer:**
  Peak cut timer. Home Leave Operation. Energy-saving operation.
- **Comfort:**
  Hi power operation. Automatic fan speed. Outdoor silent mode.
- **Convenience:**
  Multi language settings. LCD contrast setting. Function switch.
  External Input/Out put Function
- **Service:**
  Error code display. Operation data display. Backup Control.

RC-E5

Wired remote control

The RC-E5 controller enables extensive access to service and maintenance technical data combined with easy to use functions and a clear LCD display.

- **Weekly timer function as standard**
- **Timer operation**
- **Run hour metres to facilitate maintenance checking**
- **Room temperature controlled by the remote control sensor**
- **Changeable set temperature ranges**

RCH-E3

Simple wired remote control

Considering specialized usage in hotel rooms, control buttons are limited only to minimum required functions such as ON/OFF, mode, temperature setting and fan speed.
It is really simple and easy to use.

- **Up to 16 units :**
  It can control up to 16 units individually, with pressing the AIRCON No. button
- **AUTO restart**
  This function allows starting the air conditioner automatically when power supply is restored after power failure or by turning on the power switch.

Wireless remote control (option)

For wireless control simply insert the infrared receiver kit on a corner of the panel.

RCN-TC-24W-E2

RCN-KIT4-E2

RCN-E-E3

CONTROL OPTION

Wired remote control can be connected

Model	Interface	Remote Control
SRK-ZSX SRK-ZR SRK-ZS SRF-ZMX SRR-ZM	SC-BIKN2-E	RC-EX3A RC-E5
FDTC-VF ※ FDUM50VH FDE50VH	not required	

※If wireless remote control is required, use RCN-TC-24W-E2

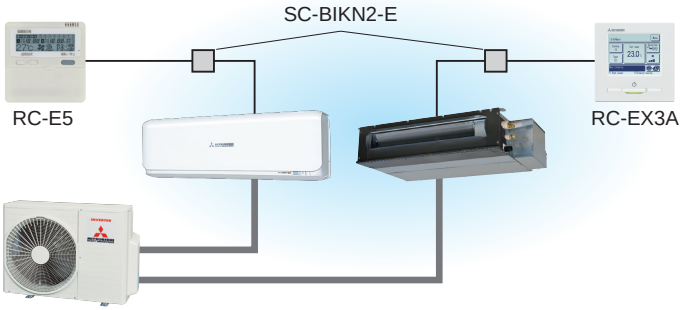

Can be connected to SUPERLINK- II

Model	Interface	Remote Control
SRK-ZSX SRK-ZR SRK-ZS SRF-ZMX SRR-ZM	SC-BIKN2-E SC-ADNA-E	RC-EX3A RC-E5
FDTC-VF FDUM50VH FDE50VH	SC-ADNA-E	

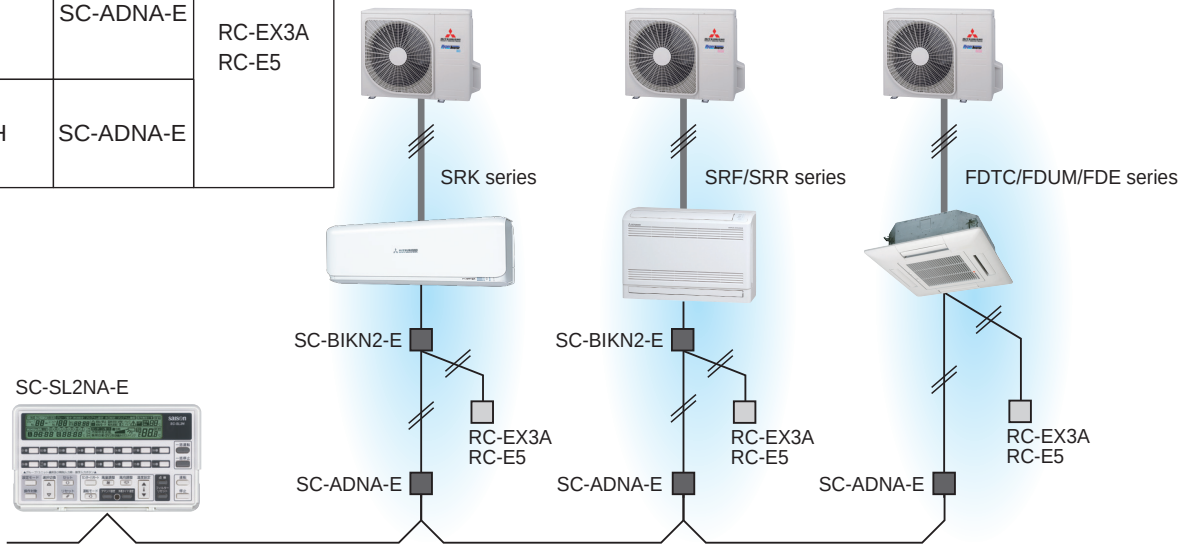

External switch connection CnT

All indoor units are equipped with an additional connection point - CnT - to connect indoor units to an external ON/OFF switch; e.g. time clock, fire alarm, etc.

Model	Interface
SRK-ZSX SRK-ZR SRK-ZS SRF-ZMX SRR-ZM	SC-BIKN2-E
FDTC-VF FDUM50VH FDE50VH	not required

Remote surveillance system

Card key on-off

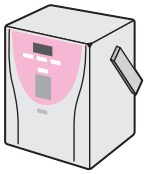

Humidifier linkage

DIMENSIONS (Unit: mm)

SRK20ZSX-W, -WB, -WT SRK25ZSX-W, -WB, -WT SRK35ZSX-W, -WB, -WT SRK50ZSX-W, -WB, -WT SRK60ZSX-W, -WB, -WT

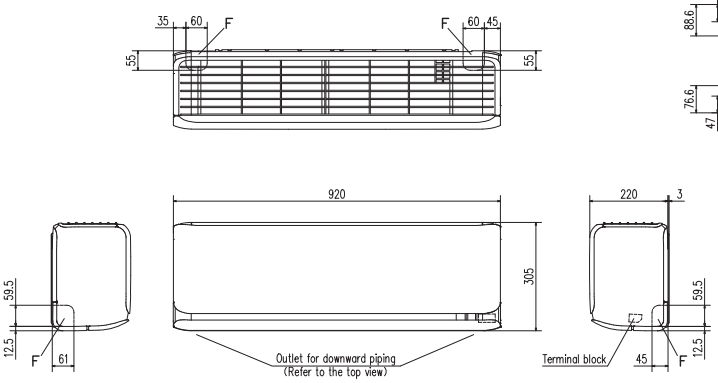

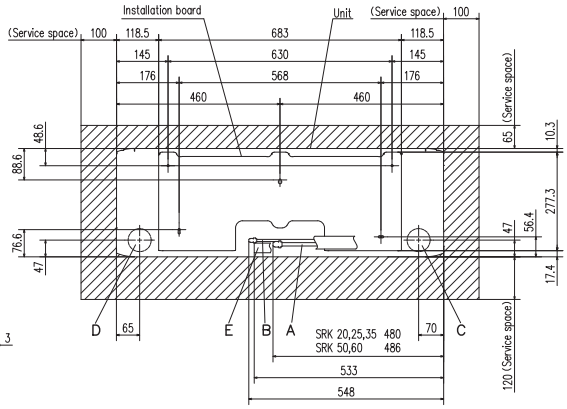

Space for installation and service when viewing from the front

Symbol	Content		
A	Gas piping	SRK 20,25,35 SRK 50,60	ø9.52 (3/8") (Flare) ø12.7 (1/2") (Flare)
B	Liquid piping	ø6.35 (1/4") (Flare)	
C	Hole on wall for right rear piping	(ø65)	
D	Hole on wall for left rear piping	(ø65)	
E	Drain hose	VP16	
F	Outlet for piping		

SRK20ZSX-S SRK25ZSX-S SRK35ZSX-S SRK50ZSX-S SRK60ZSX-S

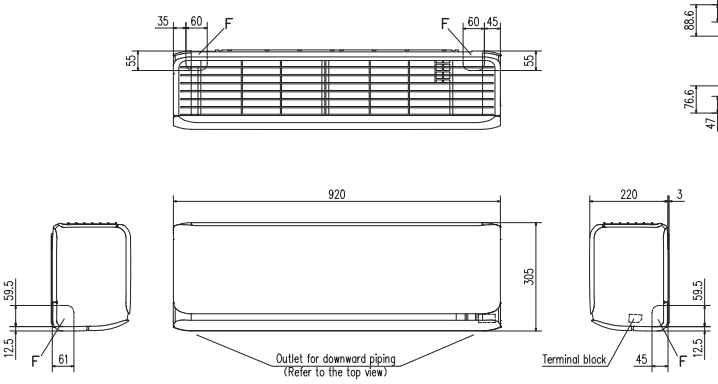

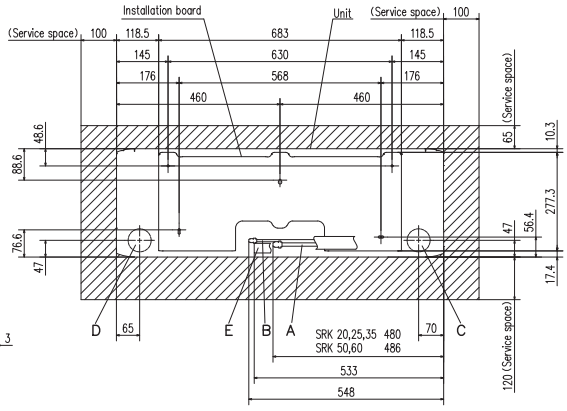

Space for installation and service when viewing from the front

Symbol	Content		
A	Gas piping	SRK 20,25,35 SRK 50,60	ø9.52 (3/8") (Flare) ø12.7 (1/2") (Flare)
B	Liquid piping	ø6.35 (1/4") (Flare)	
C	Hole on wall for right rear piping	(ø65)	
D	Hole on wall for left rear piping	(ø65)	
E	Drain hose	VP16	
F	Outlet for piping		

SRK63ZR-W SRK71ZR-W SRK80ZR-W SRK63ZR-S SRK71ZR-S SRK80ZR-S SRK100ZR-S

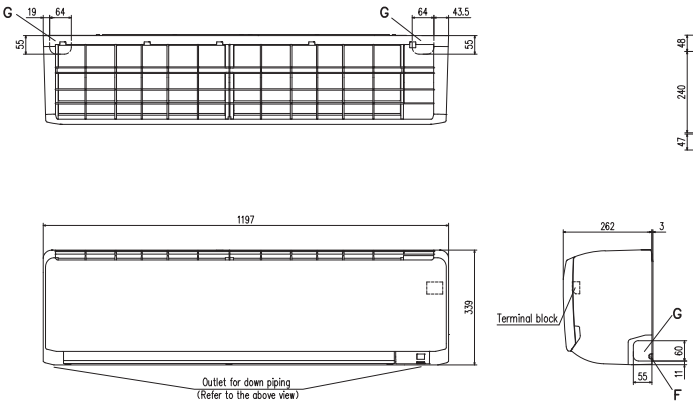

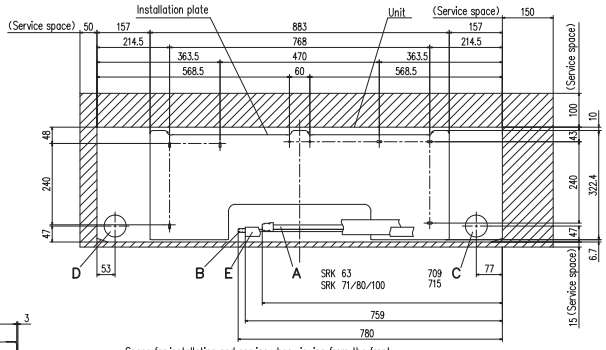

Space for installation and service when viewing from the front

Symbol	Content		
A	Gas piping	SRK 63 SRK 71,80,100	ø12.7 (1/2") (Flare) ø15.88 (5/8") (Flare)
B	Liquid piping	SRK 63,71,80 SRK 100	ø6.35 (1/4") (Flare) ø9.52 (3/8") (Flare)
C	Hole on wall for right rear piping	(ø65)	
D	Hole on wall for left rear piping	(ø65)	
E	Drain hose	VP16	
F	Outlet for wiring (on both side)		
G	Outlet for piping (on both side)		

INDOOR UNIT

SRK20ZS-W,-WB,-WT SRK25ZS-W,-WB,-WT
SRK35ZS-W,-WB,-WT SRK50ZS-W,-WB,-WT
SRK20ZS-S,-SB,-ST SRK25ZS-S,-SB,-ST
SRK35ZS-S,-SB,-ST SRK50ZS-S,-SB,-ST

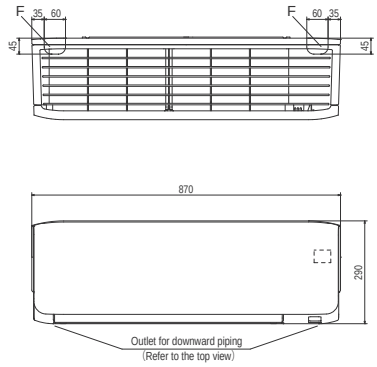

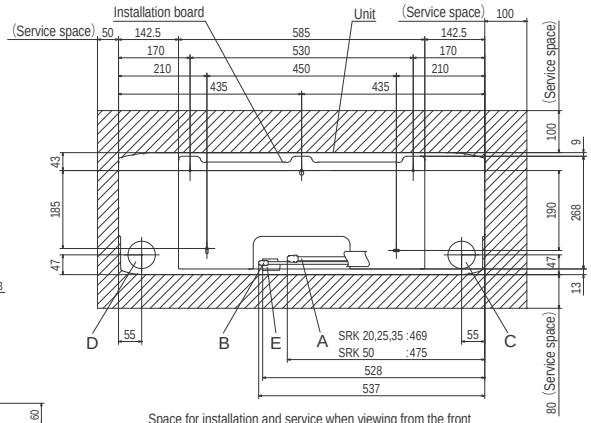

Space for installation and service when viewing from the front

Symbol	Content		
A	Gas piping	SRK20, 25, 35	φ9.52 (3/8") (Flare)
		SRK50	φ12.7 (1/2") (Flare)
B	Liquid piping	φ6.35 (1/4") (Flare)	
C	Hole on wall for right rear piping	(φ65)	
D	Hole on wall for left rear piping	(φ65)	
E	Drain hose	VP16	
F	Outlet for piping (on both side)		

SRK25ZSP-W SRK35ZSP-W SRK45ZSP-W
SRK25ZSP-S SRK35ZSP-S SRK45ZSP-S

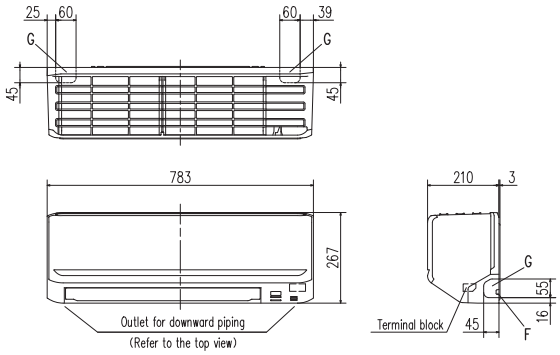

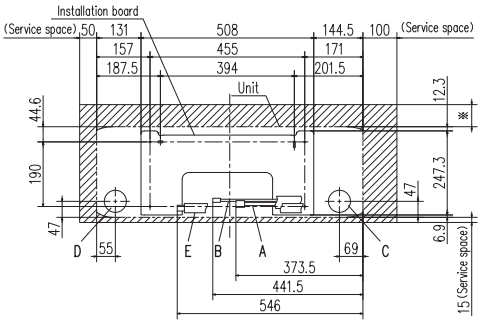

※	Service space	65
	Recommendation	80

Space for installation and service when viewing from the front

Symbol	Content		
A	Gas piping	SRK25,35	φ9.52 (3/8") (Flare)
		SRK45	φ12.7 (1/2") (Flare)
B	Liquid piping	φ6.35 (1/4") (Flare)	
C	Hole on wall for right rear piping	(φ65)	
D	Hole on wall for left rear piping	(φ65)	
E	Drain hose	VP16	
F	Outlet for wiring		
G	Outlet for piping (on both side)		

SKM20ZSP-S SKM25ZSP-S SKM35ZSP-S

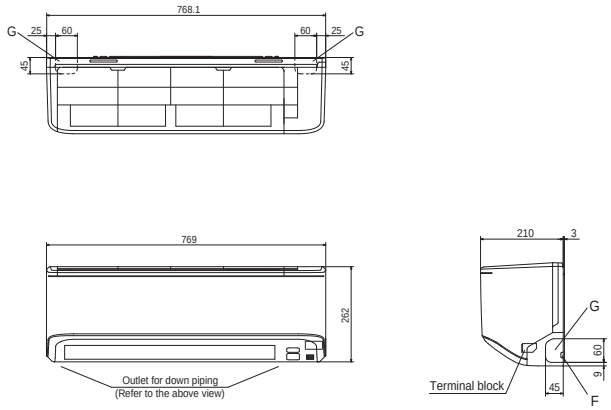

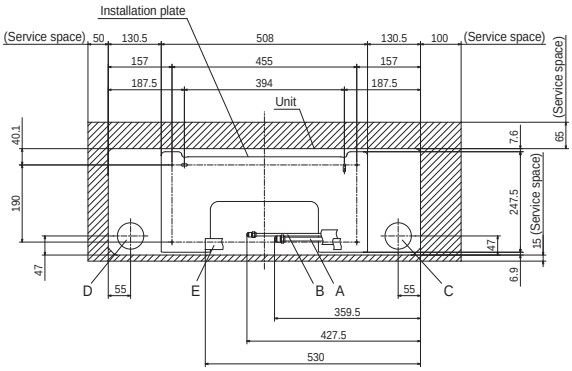

Space for installation and service when viewing from the front

Symbol	Content	
A	Gas piping	Model φ9.52(3/8")(Flare)
B	Liquid piping	φ6.35(1/4")(Flare)
C	Hole on wall for right rear piping	(φ65)
D	Hole on wall for left rear piping	(φ65)
E	Drain hose	VP16
F	Outlet for wiring	
G	Outlet for piping (on both side)	

DIMENSIONS (Unit: mm)

SRF25ZMX-S SRF35ZMX-S SRF50ZMX-S

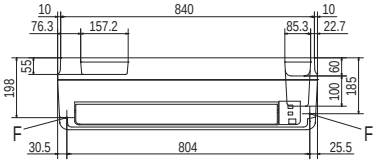

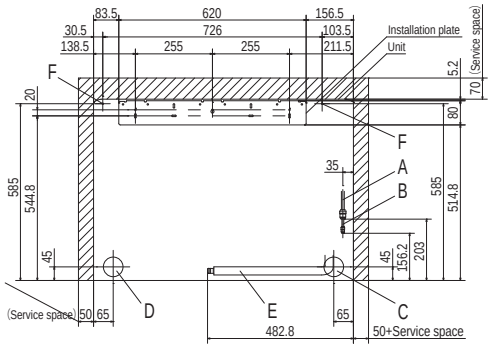

Space for installation and service when viewing from the front

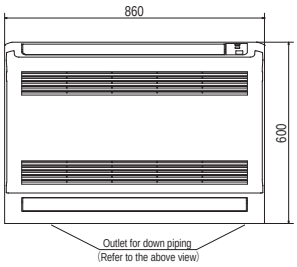

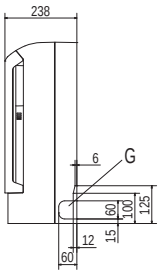

Symbol	Content		
A	Gas piping	Model	25,35 : ϕ9.52 (3/8") (Flare) 50 : ϕ12.7 (1/2") (Flare)
B	Liquid piping	ϕ6.35 (1/4") (Flare)	
C	Hole on wall for right rear piping	(ϕ65)	
D	Hole on wall for left rear piping	(ϕ65)	
E	Drain hose	VP16	
F	Screw point fasten the indoor unit	ϕ5	
G	Outlet for piping (on both side)		

SRR25ZM-S SRR35ZM-S

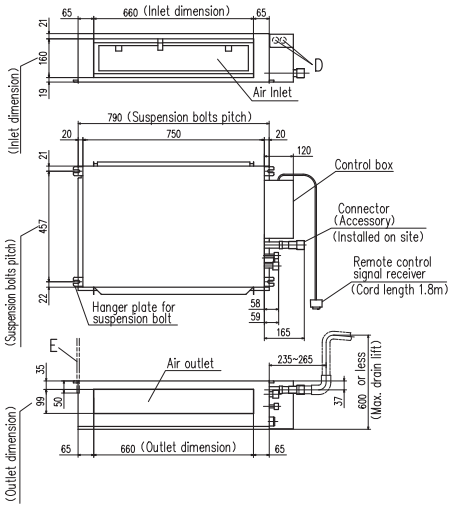

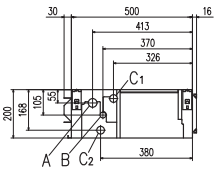

Space for installation and service

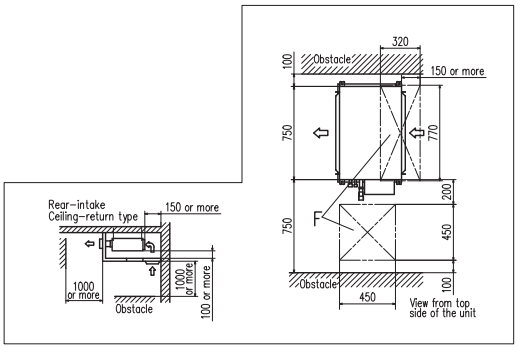

Symbol	Content	
	Model	25,35
A	Gas piping	ϕ9.52 (3/8") (Flare)
B	Liquid piping	ϕ6.35 (1/4") (Flare)
C1	Drain piping	VP25 (I.D.25 , O.D.32) (Used with attached connector)
C2	Drain piping (Gravity drainage)	VP25 (I.D.25 , O.D.32) (Used with attached connector)
D	Hole for wiring	ϕ25 x 2
E	Suspension bolts	(M10)
F	Inspection hole	(450X450) , (320X770)

SRR50ZM-S SRR60ZM-S

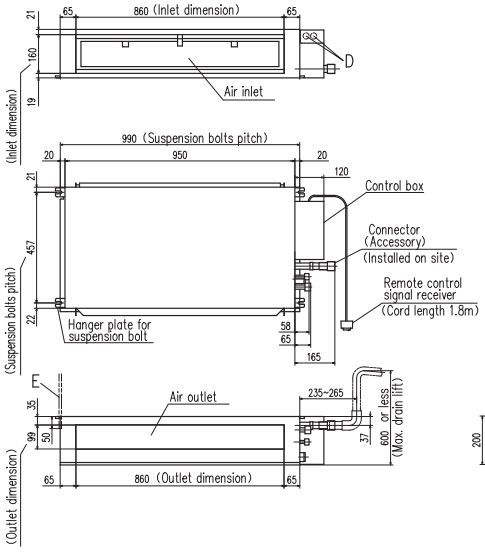

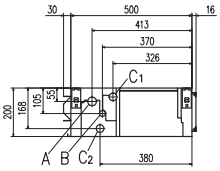

Space for installation and service

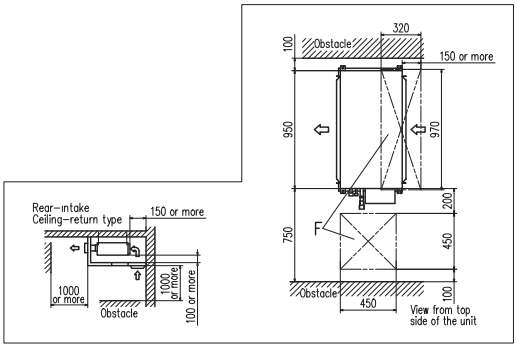

Symbol	Content	
	Model	50,60
A	Gas piping	ϕ12.7 (1/2") (Flare)
B	Liquid piping	ϕ6.35 (1/4") (Flare)
C1	Drain piping	VP25 (I.D.25 , O.D.32) (Used with attached connector)
C2	Drain piping (Gravity drainage)	VP25 (I.D.25 , O.D.32) (Used with attached connector)
D	Hole for wiring	ϕ25 x 2
E	Suspension bolts	(M10)
F	Inspection hole	(450X450) , (320X970)

FDTC25VF FDTC35VF FDTC40VF FDTC50VF FDTC60VF

Symbol	Content	
A	Gas piping	25.35 : φ9.52(3／8") (flare) 40～60 : φ12.7(1／2") (flare)
B	Liquid piping	φ6.35(1／4") (Flare)
C	Drain piping	VP20(I.D.20,O.D.26) Note(2)
D	Hole for wiring	φ25
F	Suspension bolts	(M10 or M8)
G	Air outlet opening for ducting	(Knock out)

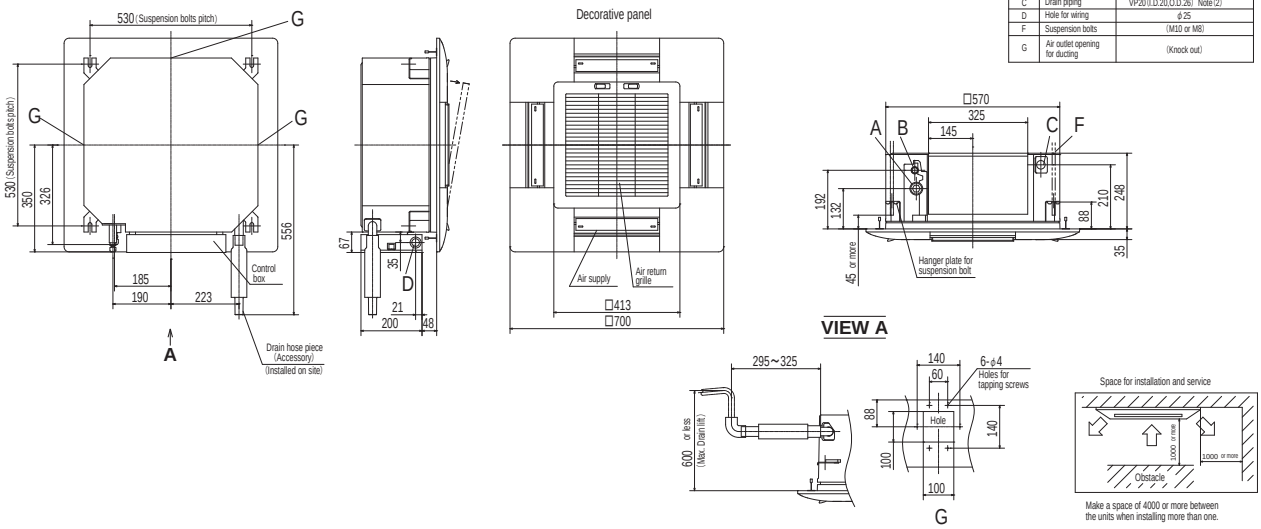

FDUM50VH

Symbol	Content	
A	Gas piping	φ12.7(1／2") (Flare)
B	Liquid piping	φ6.35(1／4") (Flare)
C1	Drain piping	VP25(I.D.25, O.D.32)
C2	Drain piping (Gravity drainage)	VP20(I.D.20, O.D.26)
D	Hole for wiring	
E	Suspension bolts	(M10)
F	Outside air opening for ducting	(φ150) (Knock out)
G	Air outlet opening for ducting	(φ125) (Knock out)
H	Inspection hole	(450X450)

Note (1) The model name label is attached on the lid of the control box.

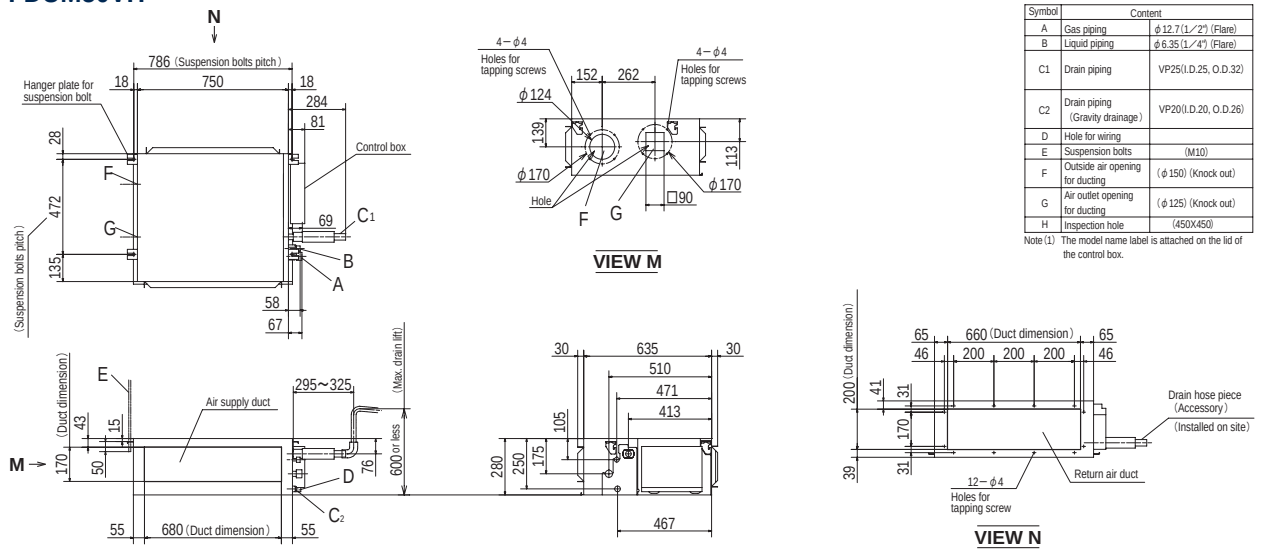

FDE50VH

Symbol	Content	
A	Gas piping	ø12.7 (1/2") (Flare)
B	Liquid piping	ø6.35 (1/4") (Flare)
C 1,2	Drain piping	VP20 (I.D.20)
D	Hole for suspension bolt	(M10 or M8)
E	Back cutout	PE cover
F	Top cutout	Plate cover
G	Hole for drain piping (for left back)	(Knock out)

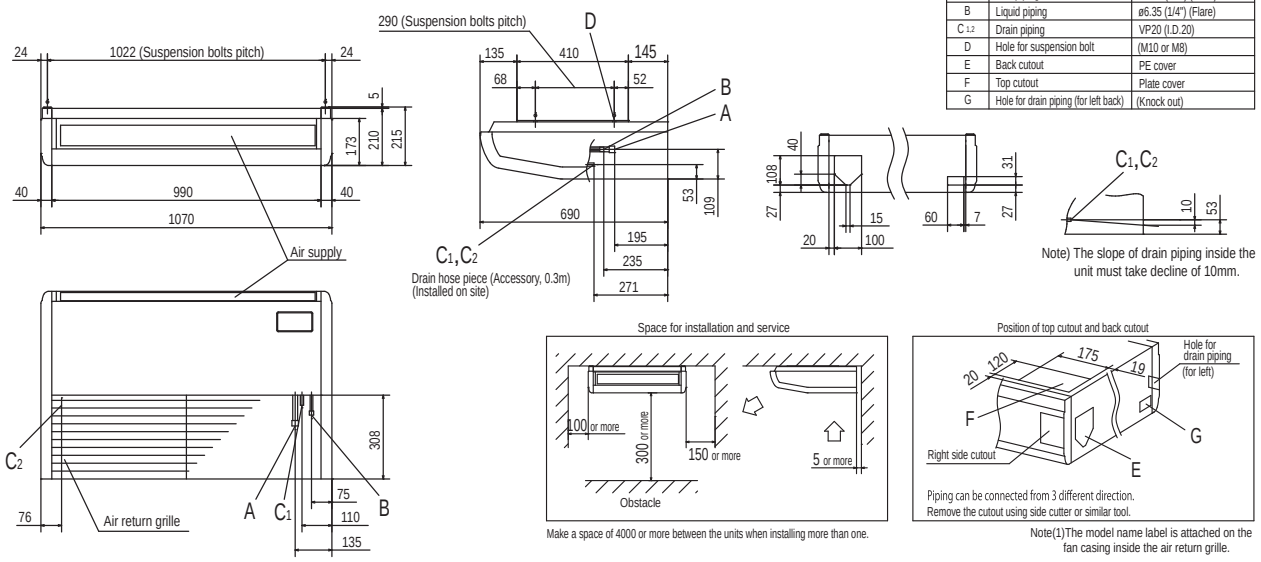

Note(1)The model name label is attached on the fan casing inside the air return grille.

DIMENSIONS (Unit: mm)

SRC20ZSX-W,-S SRC25ZSX-W,-S SRC35ZSX-W,-S
SRC40ZSX-W,-S SRC50ZSX-W,-S SRC60ZSX-W,-S SRC63ZR-W,-S

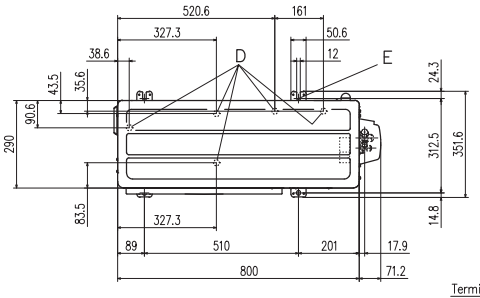

Symbol	Content	
A	Service valve connection (gas side)	20,25,35 ϕ9.52(3/8")(Flare) 40,50,60,63 ϕ12.7(1/2")(Flare)
B	Service valve connection (liquid side)	ϕ6.35 (1/4") (Flare)
C	Pipe/cable draw-out hole	
D	Drain discharge hole	ϕ20×5places
E	Anchor bolt hole	M10×4places

Minimum installation space

Examples of installation / Dimensions	I	II	III	IV
L1	Open	280	280	180
L2	100	75	Open	Open
L3	100	80	80	80
L4	250	Open	250	Open

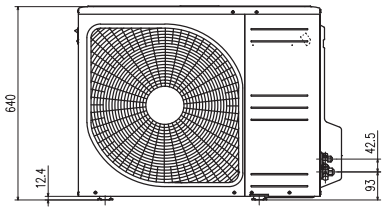

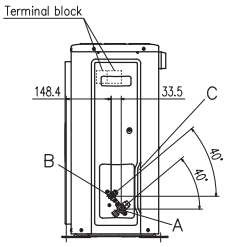

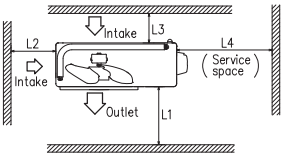

SRC50ZS-W,-S SRC25ZMX-S SRC35ZMX-S SRC45ZSP-W,-S

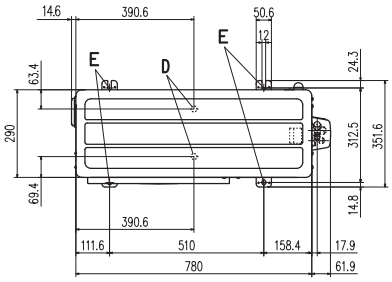

Symbol	Content	
A	Service valve connection (gas side)	ZMX : ϕ9.52(3／8") (flare) ZS,ZMP : ϕ12.7(1／2") (flare)
B	Service valve connection (liquid side)	ϕ6.35 (1/4") (Flare)
C	Pipe/cable draw-out hole	
D	Drain discharge hole	ϕ20×2places
E	Anchor bolt hole	M10×4places

Minimum installation space

Examples of installation / Dimensions	I	II	III	IV
L1	Open	280	280	180
L2	100	75	Open	Open
L3	100	80	80	80
L4	250	Open	250	Open

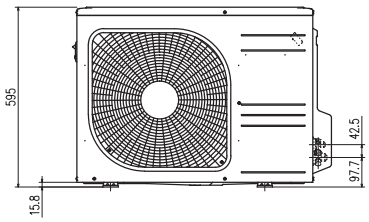

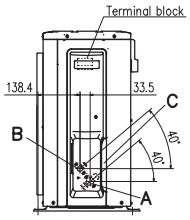

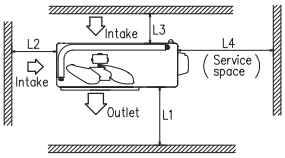

SRC20ZS-W SRC25ZS-W SRC35ZS-W
SRC20ZS-S SRC25ZS-S SRC35ZS-S

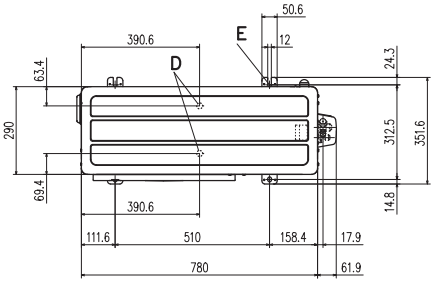

Symbol	Content	
A	Service valve connection (gas side)	ϕ9.52 (3/8") (Flare)
B	Service valve connection (liquid side)	ϕ6.35 (1/4") (Flare)
C	Pipe/cable draw-out hole	
D	Drain discharge hole	ϕ20×2places
E	Anchor bolt hole	M10×4places

Minimum installation space

Examples of installation / Dimensions	I	II	III	IV
L1	Open	280	280	180
L2	100	75	Open	Open
L3	100	80	80	80
L4	250	Open	250	Open

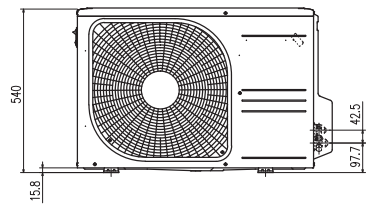

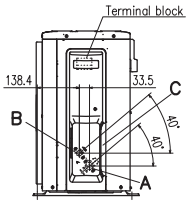

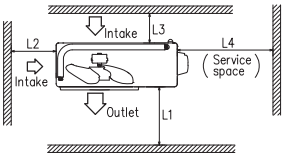

SRC71ZR-W SRC80ZR-W
SRC71ZR-S SRC80ZR-S

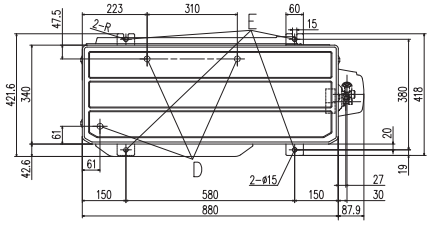

Symbol	Content	
A	Service valve connection (gas side)	ø15.88 (5/8") (Flare)
B	Service valve connection (liquid side)	ø6.35 (1/4") (Flare)
C	Pipe/cable draw-out hole	
D	Drain discharge hole	ø20 x 3 places
E	Anchor bolt hole	M10 x 4 places

Minimum installation space

Dimensions \ Examples of installation	I	II	III
L1	Open	Open	500
L2	300	250	Open
L3	100	150	100
L4	250	250	250

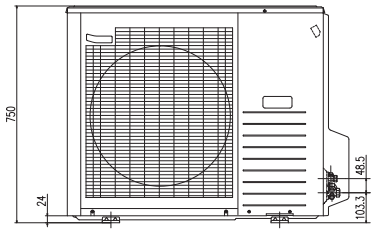

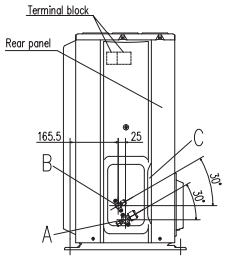

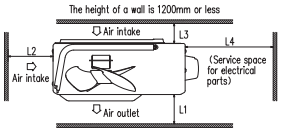

SRC25ZSP-W SRC25ZSP-S SRC35ZSP-W SRC35ZSP-S

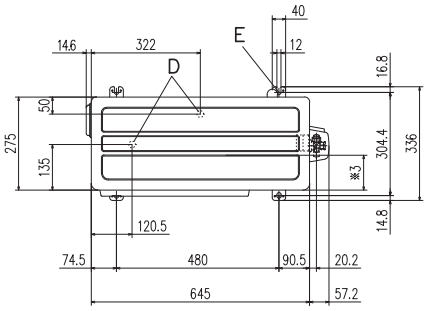

Symbol	Content	
A	Service valve connection (gas side)	ø9.52 (3/8") (Flare)
B	Service valve connection (liquid side)	ø6.35 (1/4") (Flare)
C	Pipe/cable draw-out hole	
D	Drain discharge hole	ø20×2places
E	Anchor bolt hole	M10×4places

Dimensions \ Examples of installation	I	II	III	IV
L1	Open	280	280	180
L2	100	100	Open	Open
L3	100	80	80	80
L4	250	Open	250	Open

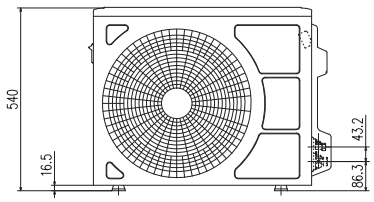

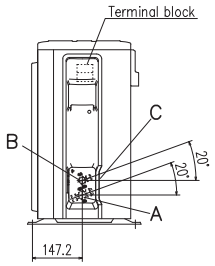

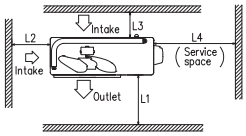

Minimum installation space

FDC100VNP

Symbol	Content	
A	Service valve connection (gas side)	ø15.88 (5/8") (Flare)
B	Service valve connection (liquid side)	ø9.52 (3/8") (Flare)
C	Pipe/cable draw-out hole	
D	Drain discharge hole	ø20×3 places
E	Anchor bolt hole	M10×4 places
F	Cable draw-out hole	ø30×3 places

Notes
(1) It must not be surrounded by walls on the four sides.
(2) The unit must be fixed with anchor bolts. An anchor bolt must not protrude more than 15mm.
(3) Where the unit is subject to strong winds, lay it in such a direction that the blower outlet face is perpendicular to the dominant wind direction.
(4) Leave 1m or more space above the unit.
(5) A wall in front of the blower outlet must not exceed the units height.
(6) The model name label is attached on the service panel.

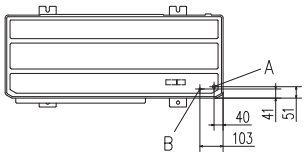

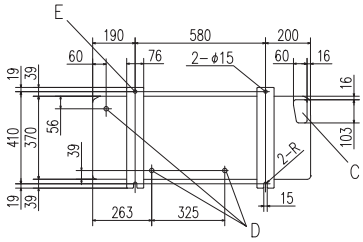

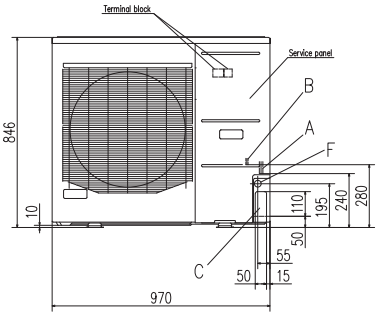

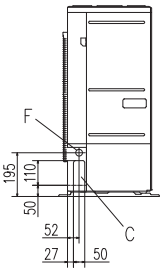

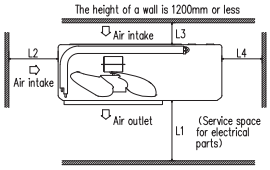

Minimum installation space

Dimensions \ Examples of installation	I	II	III
L1	Open	Open	500
L2	300	250	Open
L3	100	150	100
L4	250	250	250

DIMENSIONS (Unit: mm)

SCM40ZS-S SCM45ZS-S

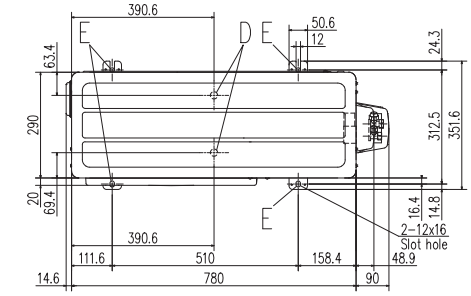

Symbol	Content	
A	Service valve connection (gas side)	ϕ9.52 (3/8") (Flare)
B	Service valve connection (liquid side)	ϕ6.35 (1/4") (Flare)
C	Pipe/cable draw-out hole	
D	Drain discharge hole	ϕ20×2places
E	Anchor bolt hole	M10–12×4places

	Installation space
L1	280 or more
L2	100 or more
L3	80 or more
L4	250 or more

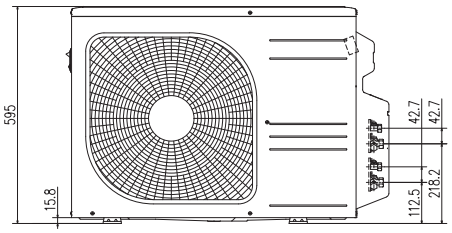

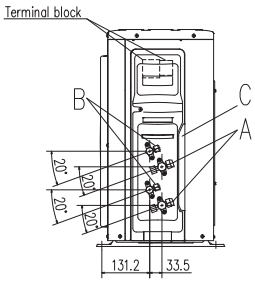

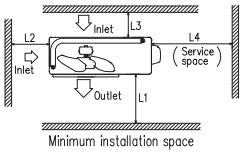

SCM50ZS-S1 SCM60ZM-S1

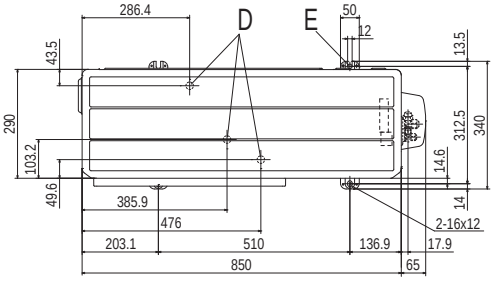

Symbol	Content	
A	Service valve connection (gas side)	ϕ9.52 (3/8") Flare)
B	Service valve connection (liquid side)	ϕ6.35 (1/4") Flare)
C	Pipe/cable draw-out hole	
D	Drain discharge hole	ϕ20 x 3 places
E	Anchor bolt hole	M10 x 4 places

Minimum installation space

	Installation space
L1	600 or more
L2	100 or more
L3	100or more
L4	No obstacles (Service space or electrical parts)

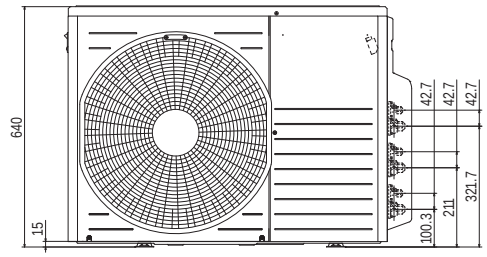

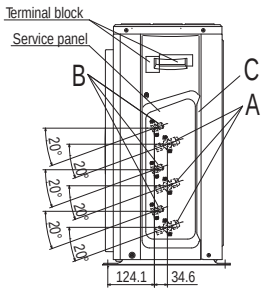

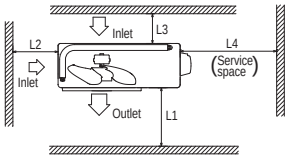

SCM71ZM-S1 SCM80ZM-S1

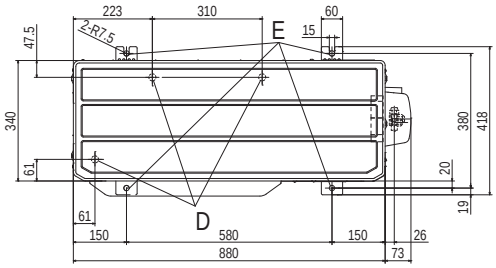

Symbol	Content	
A	Service valve connection (gas side)	ϕ9.52 (3/8") Flare)
B	Service valve connection (liquid side)	ϕ6.35 (1/4") Flare)
C	Pipe/cable draw-out hole	
D	Drain discharge hole	ϕ20 x 3 places
E	Anchor bolt hole	M10 x 4 places

Minimum installation space

Dimensions \ Examples of installation	I	II	III
L1	Open	Open	500
L2	300	250	Open
L3	100	150	100
L4	250	250	250

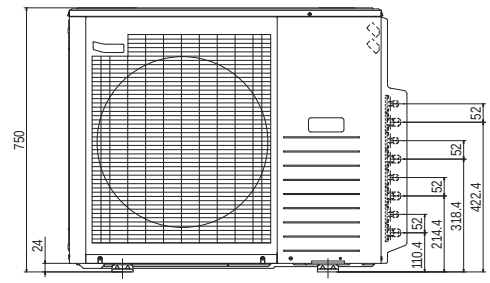

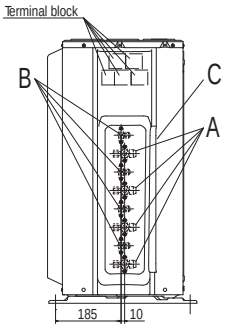

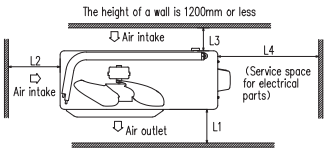

SCM100ZM-S

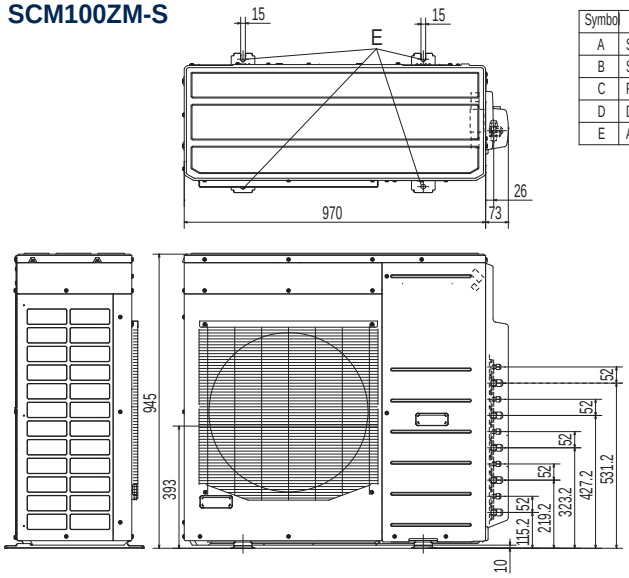

Symbol	Content	
A	Service valve connection (gas side)	φ9.52 (3/8") (Flare)
B	Service valve connection (liquid side)	φ6.35 (1/4") (Flare)
C	Pipe/cable draw-out hole	
D	Drain discharge hole	φ20×3places
E	Anchor bolt hole	M10×4places

Notes
(1) It must not be surrounded by walls on the four sides.
(2) The unit must be fixed with anchor bolts. An anchor bolt must not protrude more than 15mm.
(3) Where the unit is subject to strong winds, lay it in such a direction that the blower outlet faces perpendicularly to the dominant wind direction.
(4) Leave 1m or more space above the unit.
(5) A wall in front of the blower outlet must not exceed the units height.
(6) The model name label is attached on the rear panel.

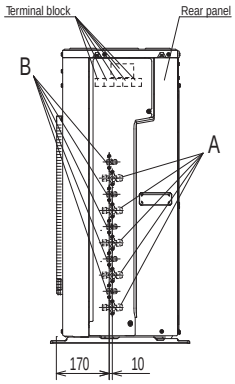

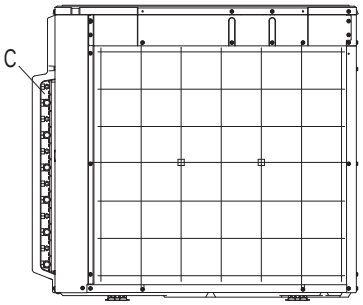

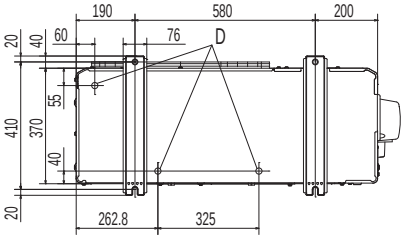

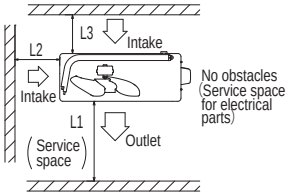

Minimum installation space

Dimensions \ Examples of installation	I	II	III
L1	Open	Open	500
L2	300	5	Open
L3	150	300	150

SCM125ZM-S

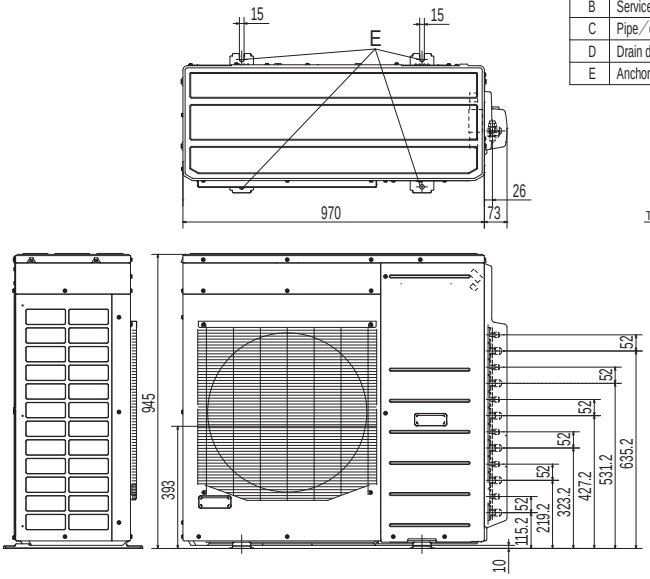

Symbol	Content	
A	Service valve connection (gas side)	φ9.52 (3/8") (Flare)
B	Service valve connection (liquid side)	φ6.35 (1/4") (Flare)
C	Pipe/cable draw-out hole	
D	Drain discharge hole	φ20×3places
E	Anchor bolt hole	M10×4places

Notes
(1) It must not be surrounded by walls on the four sides.
(2) The unit must be fixed with anchor bolts. An anchor bolt must not protrude more than 15mm.
(3) Where the unit is subject to strong winds, lay it in such a direction that the blower outlet faces perpendicularly to the dominant wind direction.
(4) Leave 1m or more space above the unit.
(5) A wall in front of the blower outlet must not exceed the units height.
(6) The model name label is attached on the rear panel.

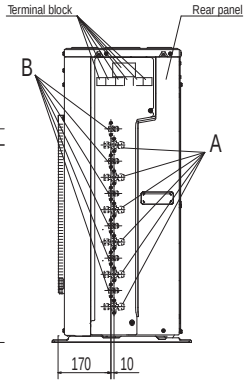

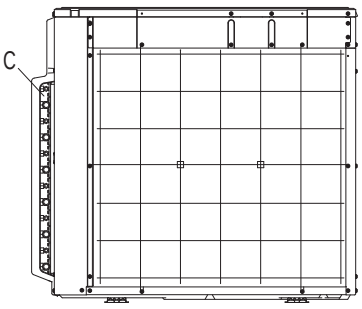

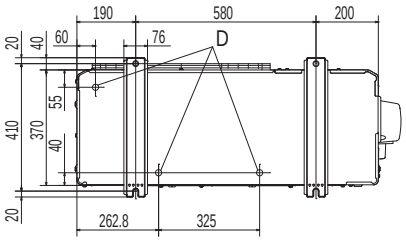

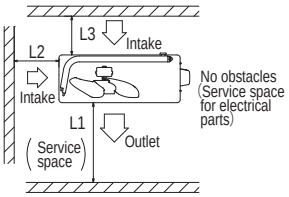

Minimum installation space

Dimensions \ Examples of installation	I	II	III
L1	Open	Open	500
L2	300	5	Open
L3	150	300	150

ENERGY EFFICIENT AND ENVIRONMENTALLY CONSCIOUS

ENERGY LABEL – FOR EU/EEA AREA ONLY –

SEER and SCOP is defined in European regulations listed below.

No.626/2011 of 4 May 2011: energy labeling of air-conditioners (below cooling capacity 12kW).
No.206/2012 of 6 March 2012: requirement for air-conditioners and comfort fans.

Seasonal efficiency is the new way of rating the true efficiency of heating and cooling products over an entire year.

Set by the EU's new regulation implementing Eco-Design Directive for Energy Related Product (ErP) which specifies the minimum efficiency of air-conditioners manufacturers must integrate into their products.

The new Seasonal Efficiency rating system that must be used for heating and cooling by all manufacturers are;

SEER - Seasonal Efficiency Ratio (value in cooling)
SCOP - Seasonal Coefficient of Performance (value in heating)

The new rating system will indicate the true efficiency of the energy using product at specified condition.

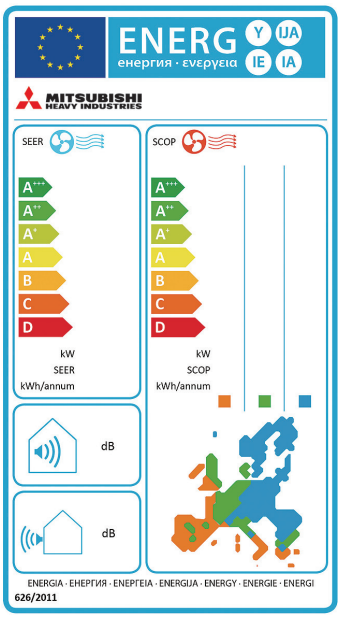

Employment of lead-free solder

Adapted to RoHS directive

RoHS:Restriction of Hazardous substances

In order to avoid the release of hazardous substances into the environments, all models have utilized lead-free solder application. It has been considered to be difficult to use lead-free solder for practical applications because it requires higher solder temperatures at assembly, which can jeopardize reliability. However our PbF soldering method can produce a higher quality lead-free printed circuit board.

Employment of R32 R410A

All models use refrigerant R32 or R410A characterized by the ozone depletion coefficient being 0.

Excellent Energy Saving

High performance and excellent energy savings are achieved at the same time by heat exchanger's increased capacity and employment of high efficiency DC motor.

Environmental

Mitsubishi Heavy Industries Thermal systems are unswervingly dedicated to facing the challenges of the future. Mitsubishi Heavy Industries Thermal systems are dedicated to supporting global sustainability by offering the most energy-efficient air-conditioning systems. Through our in-depth research and development we are able to incorporate new technologies within our units to maximise their energy efficiency and significantly reduce carbon emissions.

Environmental Impact

Mitsubishi Heavy Industries Thermal systems recognises the increasing importance of reducing carbon emissions as this is becoming a priority when selecting air and water distribution systems. Furthermore new technologies are constantly being developed to help meet heating and cooling requirements as well as environmental objectives.

The future of our planet rests in the sustained evolution of humankind while caring, with love and responsibility, for all life forms that inhabit it. Therefore Mitsubishi Heavy Industries Thermal systems will continue to develop new technologies and products and will remain competitive in the market to achieve a sustainable future.

Based on European regulations listed below, please refer the following specification table.

Single-split

Indoor unit		SRK20ZSX-W, -WB, -WT	SRK25ZSX-W, -WB, -WT	SRK35ZSX-W, -WB, -WT	SRK50ZSX-W, -WB, -WT	SRK60ZSX-W, -WB, -WT	SRK20ZS-W, -WB, -WT	SRK25ZS-W, -WB, -WT
Outdoor unit		SRC20ZSX-W	SRC25ZSX-W	SRC35ZSX-W	SRC50ZSX-W1	SRC60ZSX-W1	SRC20ZS-W	SRC25ZS-W
Energy class (cooling/heating)		A+++/A+++	A+++/A+++	A+++/A+++	A++/A++	A++/A++	A+++/A++	A+++/A++
SEER		10.00	10.30	9.50	8.30	7.80	8.50	8.50
SCOP (Average climate)		5.20	5.20	5.10	4.70	4.70	4.60	4.70
Pdesign (cooling/heating(@-10°C))	kW	2.00/2.80	2.50/3.00	3.50/3.40	5.00/4.50	6.10/5.20	2.00/2.60	2.50/2.70
Annual electricity consumption (cooling/heating)	kWh/a	70/754	85/808	129/934	211/1341	274/1551	83/793	103/804
Designated heating season		Average						

Indoor unit		SRK35ZS-W, -WB, -WT	SRK50ZS-W, -WB, -WT	SRK63ZR-W	SRK71ZR-W	SRK80ZR-W	SRK25ZSP-W	SRK35ZSP-W
Outdoor unit		SRC35ZS-W	SRC50ZS-W	SRC63ZR-W	SRC71ZR-W	SRC80ZR-W	SRC25ZSP-W	SRC35ZSP-W
Energy class (cooling/heating)		A++/A++	A++/A++	A++/A++	A++/A+	A++/A+	A++/A+	A++/A+
SEER		8.40	7.00	8.10	7.40	7.00	6.80	7.30
SCOP (Average climate)		4.70	4.60	4.70	4.50	4.40	4.10	4.40
Pdesign (cooling/heating(@-10°C))	kW	3.50/3.00	5.00/3.80	6.30/5.40	7.10/6.60	8.00/7.10	2.50/2.80	3.20/3.00
Annual electricity consumption (cooling/heating)	kWh/a	146/895	250/1158	273/1608	337/2055	401/2259	129/957	155/955
Designated heating season		Average						

Indoor unit		SRK45ZSP-W	SRK20ZSX-S	SRK25ZSX-S	SRK35ZSX-S	SRK50ZSX-S	SRK60ZSX-S	SRK63ZR-S
Outdoor unit		SRC45ZSP-W	SRC20ZSX-S	SRC25ZSX-S	SRC35ZSX-S	SRC50ZSX-S	SRC60ZSX-S	SRC63ZR-S
Energy class (cooling/heating)		A++/A+	A+++/A+++	A+++/A+++	A+++/A+++	A++/A++	A++/A++	A++/A++
SEER		6.30	9.50	9.60	9.20	8.20	7.60	7.60
SCOP (Average climate)		4.20	5.20	5.20	5.10	4.70	4.70	4.70
Pdesign (cooling/heating(@-10°C))	kW	4.50/3.80	2.00/2.70	2.50/2.90	3.50/3.30	5.00/4.50	6.10/5.20	6.30/5.40
Annual electricity consumption (cooling/heating)	kWh/a	251/1269	74/728	92/781	134/906	214/1341	282/1551	291/1610
Designated heating season		Average						

Indoor unit		SRK71ZR-S	SRK80ZR-S	SRK100ZR-S	SRK20ZS-S, -SB, -ST	SRK25ZS-S, -SB, -ST	SRK35ZS-S, -SB, -ST	SRK50ZS-S, -SB, -ST
Outdoor unit		SRC71ZR-S	SRC80ZR-S	FDC100VNP	SRC20ZS-S	SRC25ZS-S	SRC35ZS-S	SRC50ZS-S
Energy class (cooling/heating)		A++/A+	A++/A+	A++/A+	A++/A++	A++/A++	A++/A++	A++/A+
SEER		7.20	6.60	6.60	7.80	7.80	7.80	6.26
SCOP (Average climate)		4.50	4.40	4.40	4.60	4.60	4.60	4.20
Pdesign (cooling/heating(@-10°C))	kW	7.10/6.60	8.00/7.10	10.0/7.20	2.00/2.40	2.50/2.50	3.50/2.80	5.00/3.90
Annual electricity consumption (cooling/heating)	kWh/a	346/2055	425/2261	531/2289	90/732	113/762	158/852	280/1300
Designated heating season		Average						

Indoor unit		SRK25ZSP-S	SRK35ZSP-S	SRK45ZSP-S	SRF25ZMX-S	SRF35ZMX-S	SRF50ZMX-S	SRR25ZM-S
Outdoor unit		SRC25ZSP-S	SRC35ZSP-S	SRC45ZSP-S	SRC25ZMX-S	SRC35ZMX-S	SRC50ZSX-S	SRC25ZMX-S
Energy class (cooling/heating)		A/A	A++/A+	A/A	A++/A+	A++/A+	A++/A	A++/A+
SEER		5.50	6.15	5.38	7.11	6.75	6.12	6.43
SCOP (Average climate)		3.80	4.00	3.81	4.37	4.26	3.87	4.08
Pdesign (cooling/heating(@-10°C))	kW	2.50/2.80	3.20/3.00	4.50/3.80	2.50/3.00	3.50/3.30	5.00/4.80	2.50/3.30
Annual electricity consumption (cooling/heating)	kWh/a	160/1033	183/1052	293/1398	123/961	182/1085	286/1736	136/1133
Designated heating season		Average						

Indoor unit		SRR35ZM-S	FDTC25VF	FDTC35VF	FDTC40VF	FDTC50VF	FDTC60VF
Outdoor unit		SRC35ZMX-S	SRC25ZMX-S	SRC35ZMX-S	SRC40ZSX-S	SRC50ZSX-S	SRC60ZSX-S
Energy class (cooling/heating)		A++/A+	A++/A+	A++/A+	A++/A	A+/A	A+/A
SEER		6.33	6.10	6.12	6.53	6.01	5.76
SCOP (Average climate)		4.02	4.13	4.15	3.96	3.85	3.80
Pdesign (cooling/heating(@-10°C))	kW	3.50/3.55	2.55/3.10	3.60/3.60	4.00/4.00	5.00/4.80	5.60/5.90
Annual electricity consumption (cooling/heating)	kWh/a	194/1238	147/1050	207/1215	215/1416	291/1745	341/2172
Designated heating season		Average					

Multi-split System

Indoor unit		SRK20ZSX-S x 2	SRK20ZSX-S SRK25ZSX-S	SRK20ZSX-S x 3		SRK20ZSX-S x 4		SRK20ZSX-S x 5	SRK25ZS-S+ SRK35ZS-S x 3
Outdoor unit		SCM40ZS-S	SCM45ZS-S	SCM50ZS-S1	SCM60ZM-S1	SCM71ZM-S1	SCM80ZM-S1	SCM100ZM-S	SCM125ZM-S*
Energy class (cooling/heating)		A++/A+	A++/A+	A++/A+	A++/A+	A++ /A+	A++/A+	A/A+	-
SEER		6.31	6.43	6.80	6.80	7.20	7.10	5.10	5.61
SCOP (Average climate)		4.05	4.11	4.40	4.20	4.20	4.20	4.02	4.11
Pdesign (cooling/heating(@-10°C))	kW	4.00/3.30	4.50/4.10	5.00/4.90	6.00/7.30	7.10/8.10	8.00/8.20	10.00/10.10	-
Annual electricity consumption (cooling/heating)	kWh/a	222/1140	245/1396	258/1559	309/2435	346/2700	395/2733	687/3519	-
Designated heating season		Average							

*SEER/SCOP are based on EN14825:2016 and Commission regulation (EU) No.2016/2281.

Before starting use

Heating performance
The heating performance values (kW) described in the catalogue are the values obtained by operating at an outdoor temperature of 7 C and indoor temperature of 20 C as set forth in the ISO Standards. As the heating performance decreases the outdoor temperature drops, if the outdoor temperature is too low and the heating performance is insufficient, use other heating appliances as well.

Indication of sound values
The sound values are the values (A scale) measured in a chamber such as an anechoic chamber following the ISO Standards. In the actual installation state, the value is normally larger than the values given in the catalog due to the effect of surrounding noise and echo. Take this into consideration when installing.

Use in oil atmosphere
Avoid installing this unit in an atmosphere where oil scatters or builds up, such as in a kitchen or machine factory.
If the oil adheres to the heat exchanger, the heat exchanging performance will drop, mist may be generated, and the synthetic resin parts may deform and break.

Use in acidic or alkaline atmosphere
If this unit is used in acidic atmosphere such as hot spring areas having high level of sulfuric gases or in alkaline atmosphere including ammonia or calcium chloride, places where the exhaust of the heat exchanger is sucked in, or at coastal areas where the unit is subject to salt breezes, the outer plate or heat exchanger, etc., will corrode. Please ask a dealer or specialist when you use an air conditioner in places differing from a general atmosphere.

Use in places with high ceilings
If the ceiling is high, install a circulator to improve the heat and air flow distribution when heating.

Refrigerant leakage
The refrigerant (R32, R410A) used for Air conditioner is non-toxic and inflammable in its original state.
However, in consideration of a state where the refrigerant leaks into the room, measures against refrigerant leaks must be taken in small rooms where the tolerable level could be exceeded. Take measures by installing ventilation devices, etc.

Use in snowy areas
Take the following measures when installing the outdoor unit in snowy areas.

·Snow prevention
Install a snow-prevention hood so that the snow does not obstruct the air intake port or enter and freeze in the outdoor unit.

·Snow piling
In areas with heavy snow fall, the piled snow could block the air intake port. In this case, a frame that is 50cm or higher than the estimated snow fall must be installed underneath the outdoor unit.

Automatic defrosting device
If the temperature is low, and the humidity is high, frost will stick to the heat exchanger of the outdoor unit. If use is continued, the heating performance will drop.
The "Automatic defrosting device" will function to remove this frost.
After heating for approx. three to ten minutes, it will stop, and the frost will be removed. After defrosting, hot air will be blown again.

Servicing the air-conditioner
After the air-conditioner is used for several seasons, dirt will build up in the air-conditioner causing the performance to drop. In addition to regular servicing, we recommend the maintenance contract (charged for) by a specialist.

Safety Precautions

Air-conditioner usage target
The air-conditioner described in this catalog is a dedicated cooling/heating device for human use.
Do not use it for special applications such as the storage of food items, animals or plants, precision devices or valuable art, etc.
This could cause the quality of the items to drop, etc.
Do not use this for cooling vehicles or ships. Water leakage or current leaks could occur.

Before use
Always read the "User's Manual" thoroughly before starting use.

Installation
Always commission the installation to a dealer or specialist. Improper installation will lead to water leakage, electric shocks and fires.
Make sure that the outdoor unit is stable in installation. Fix the unit to stable base.

Usage place
Do not install in places where combustible gas could leak or where there are sparks.
Installation in a place where combustible gas could be generated, flow or accumulate, or places containing carbon fibers could lead to fires.

Mitsubishi Heavy Industries Thermal Systems, Ltd.
(Wholly-owned subsidiary of MITSUBISHI HEAVY INDUSTRIES, LTD.)

16-5, Konan 2-chome, Minato-ku, Tokyo, 108-8215 Japan
https://www.mhi-mth.co.jp/en/

Our factories are ISO9001 and ISO14001 certified.

Certified ISO 9001
Certificate Number : JQA-0709

Certified ISO 14001
Certificate Number : YKA4005636

19R01E-A January 2019 F

Because of our policy of continuous improvement, we reserve the right to make changes in all specifications without notice.

Edited in Japan